HYDRAULIC
# GEMMA

GEMMAHYDRAULIC.COM

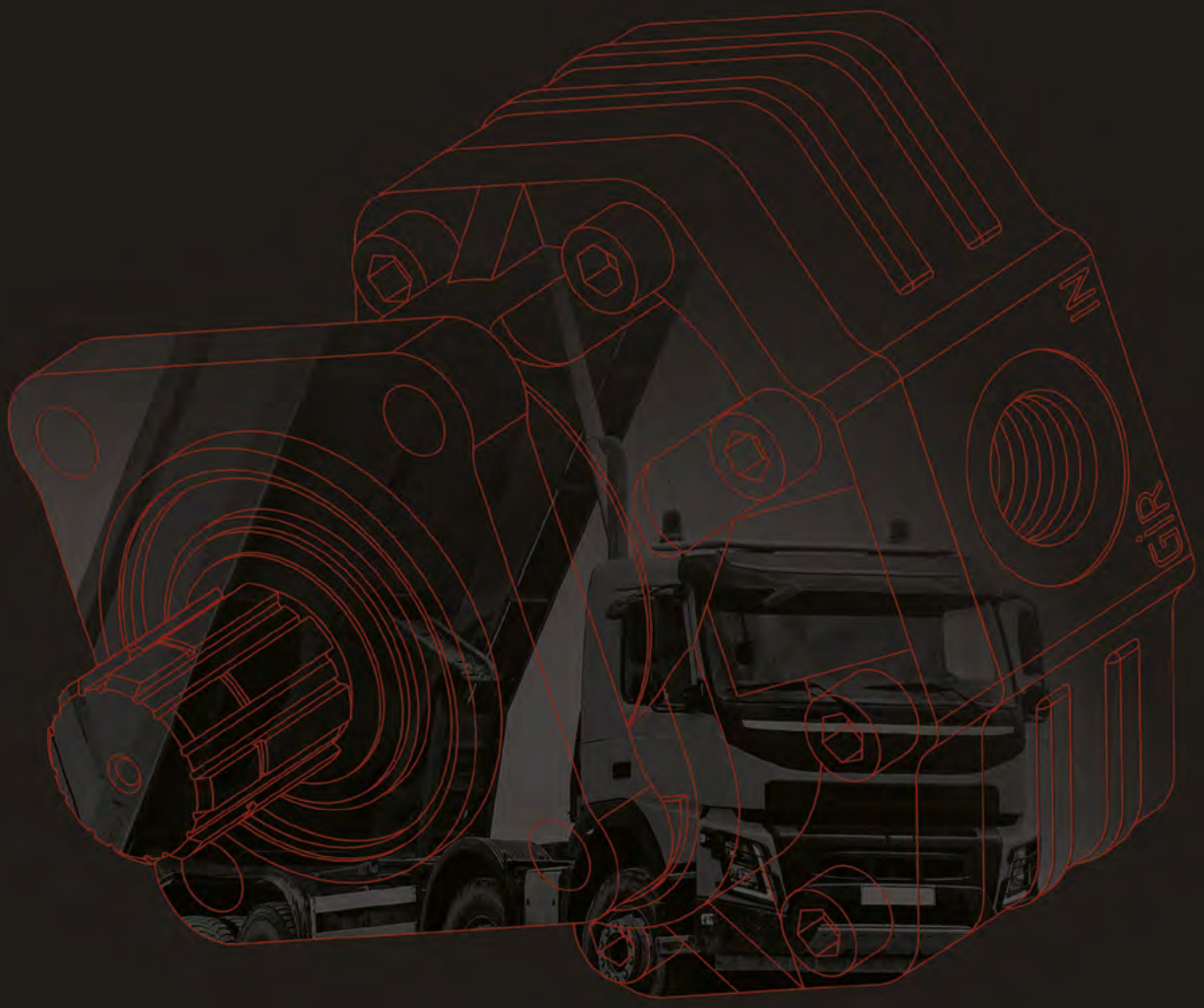

# PRODUCT CATALOGUE
ÜRÜN KATALOĞU

36.YIL

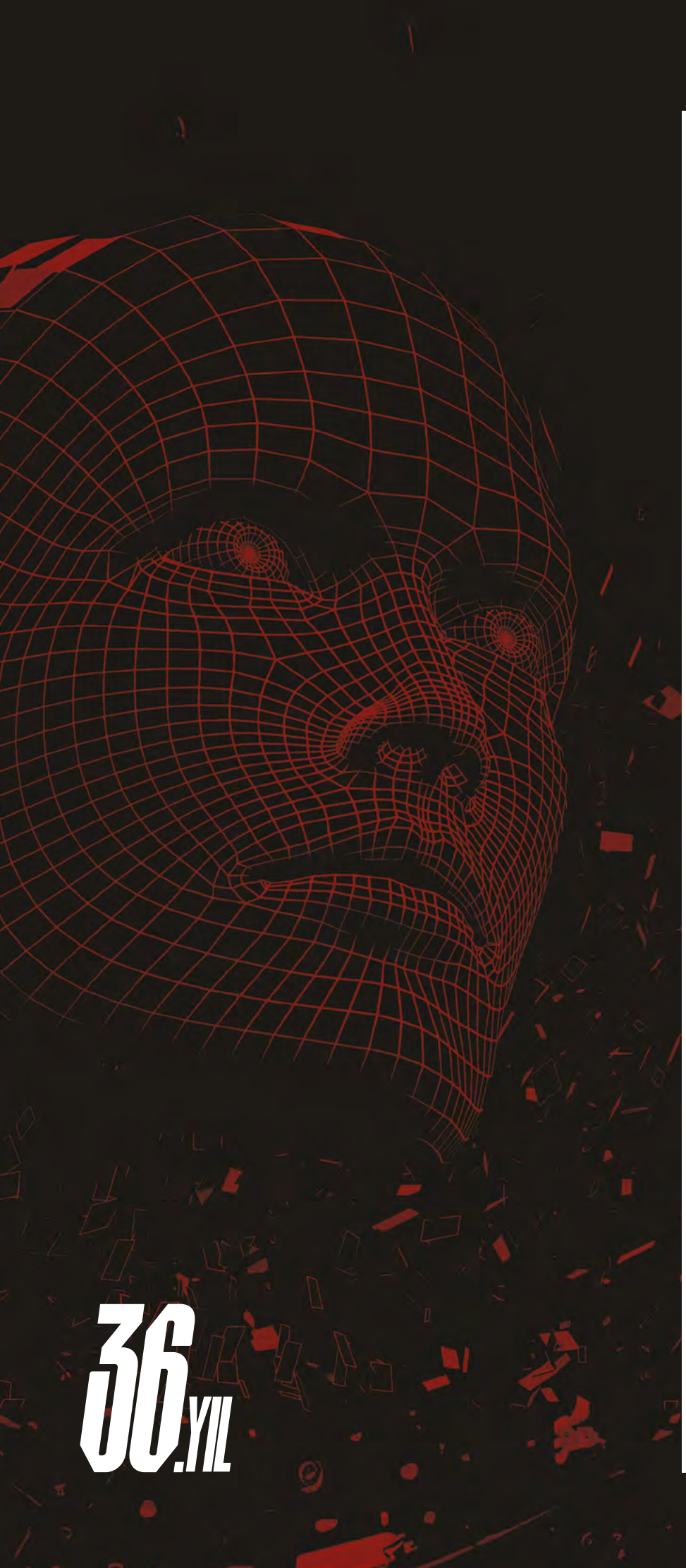

36.YIL



HAKKIMIZDA

# ABOUT US

# TURKEY'S NUMBER ONE **TIPPING SYSTEMS MANUFACTURER**

Gemma Hydraulic is a leading Turkish company operating in the hydraulic systems sector for tipper trucks, trailers, semi trailers, garbage trucks, fire trucks and cranes. Serving more than 86 countries worldwide for over 36 years, Gemma Hydraulic is based in Konya, Turkey with a state-of-the-art production facility of 14.000 m². The company is engaged in the development, production, marketing and distribution of components used in connection with hydraulic loading and unloading systems on dump trucks and trailers in on-road and off-road applications for the road transportation industry. All Gemma components are manufactured to meet global market demands in terms of quality, price, availability, on-time delivery and after-sales service.

Gemma Hydraulic has received top marks in terms of reliable and high quality production of hydraulic gear pumps, piston pumps, hydromotors, power take offs, oil tanks, fuel tanks, cylinders, directional control valves, monoblock valves, sectional valves, adapters, pneumatics, filters, oil coolers, fittings and spare parts for trucks of European, Japanese and American brands working in accordance with the highest international quality standards (ISO 9001, CE and TSE).

All packaging is done in accordance with international transportation standards guaranteeing protection against rough handling. We also offer VCI protective packaging, which provides metallic parts with long-term protection against corrosion and oil-based rust prevention.

Gemma Hydraulic offers a one-year limited warranty for products purchased directly from Gemma. It warrants to purchasers that its products will be free from defects in material or workmanship for a period of twelve months of normal use from the date of delivery. If these products prove to be defective in material or workmanship during the warranty period, Gemma will, at its option, repair or replace the defective product free of charge.

Gemma can easily meet all market needs by providing reliability, high performance and durability.

# TÜRKİYE'NİN BİR NUMARALI **DAMPER SİSTEMLERİ ÜRETİCİSİ**

Gemma Hidrolik, damperli kamyonlar, treylerler, semi treylerler, çöp kamyonları ve vinçler için hidrolik sistemler sektöründe faaliyet gösteren öncü bir Türk firmasıdır. 36 yılı aşkın süredir dünya çapında 86'dan fazla ülkeye hizmet veren Gemma Hidrolik, 14.000 m² 'lik son teknoloji bir üretim tesisi ile Konya Türkiye'de yerleşiktir. Karayolu taşımacılığı endüstrisi için karayolu ve arazi uygulamalarında damperli kamyonlar ve treylerler üzerindeki hidrolik yükleme ve boşaltma sistemleri ile bağlantılı olarak kullanılan bileşenlerin geliştirilmesi, üretimi, pazarlanması ve dağıtımı ile ilgilenmektedir. Tüm Gemma bileşenleri kalite, fiyat, bulunabilirlik, zamanında teslimat ve satış sonrası hizmet açısından küresel pazar taleplerini karşılamak için üretilmiştir.

Gemma Hidrolik, en yüksek uluslararası kalite standartlarına (ISO 9001, CE ve TSE) uygun olarak çalışan Avrupa, Japon ve Amerikan markalarının kamyonları için hidrolik dişli pompa, piston pompa, hidromotorlar, yavru şanzımanlar, yağ tankları, yakıt tankları silindirler, yön denetim valfleri, monoblok valfler, parçalı dilimli valfler, adaptörler, pnömatikler, filtreler, yağ soğutucuları, bağlantı parçaları ve yedek parçalar için güvenilir ve kaliteli üretimi açısından en düst düzey not almıştır.

Tüm paketleme, sert muameleye karşı korumayı garanti eden uluslararası nakliye standartlarına uygun olarak yapılır. Ayrıca, metalik parçalara korozyona karşı uzun süreli koruma ve yağ bazlı pas önleme sağlayan VCI koruyucu ambalaj sunuyoruz.

Gemma Hidrolik olarak; doğrudan Gemma'dan satın alınan ürünler için bir yıllık sınırlı garanti sunmaktadır. Alıcılara, ürünlerinin teslimat tarihinden itibaren on iki aylık normal kullanım süresi boyunca malzeme veya işçilik kusurları içermeyeceğini garanti eder. Bu ürünlerin garanti süresi içinde malzeme veya işçilik açısından kusurlu olduğu ortaya çıkarsa, Gemma kendi tercihine bağlı olarak kusurlu ürünü ücretsiz olarak onaracak veya değiştirecektir.

Gemma, güvenilirlik, yüksek performans ve dayanıklılık sağlayarak tüm pazar ihtiyaçlarını kolayca karşılayabilir.

HYDRAULIC GEMMA

gemma hydraulic com

## GÜVEN VE TEKNOLOJİ ÜRETİYORUZ

# WE PRODUCE TRUST AND TECHNOLGY



**36 YEARS EXPERIENCE**

With over 30 years of experience, Gemma produces high-quality, reliable, and standards-compliant competitive products, maintaining a strong position on the global platform. It proudly advances toward becoming a world brand by standardizing its strategic approach and quality. The company has adopted the principles of making future-oriented initiatives, creating employment opportunities, and signing international achievements.

Gemma, with its motto of maintaining quality and customer satisfaction, operates in this direction both before and after production with a professional team experienced in its field and an R&D team established within its structure. It aims to increase customer satisfaction and quality standards with a quality control system implemented at every stage of production.

With the experience and knowledge gained over the years, Gemma has standardized its unique quality policy with its professional team and service principles, establishing itself as a pioneering company that provides excellent service to its target audience with its national and international identity.

CERTIFICATE



ASCERT Certification

SERTİFİKA
CERTIFICATE

GEMMA HİDROLİK LİMİTED ŞİRKETİ

BÜYÜKKAYACIKOSB MAHALLESİ 413. NOLU SOKAK NO:9 SELÇUKLU, KONYA, TÜRKİYE

HİDROLİK POMPA, PTO, HİDROLİK VALF, KARDAN MİLİ, SİLİNDİR, DÖKÜM, YAĞ TANKI VE YAKIT TANKI TASARIMI, ÜRETİMİ, SERVİS HİZMETLERİ, İTHALATI VE İHRACATI

*DESIGN MANUFACTURING, TECHNICAL SUPPORT SERVICES, EXPORTA AND IMPORT OF HYDRAULIC PUMP, POWER TAKE-OFFS (PTO), HYDRAULIC VALVE, CARDAN SHAFT, CYLINDER, CASTING, OIL TANK AND FUEL TANK*

IAF/EA Kod(Code): 17-18-22

ISO 9001:2015

Kalite Yönetim Sistemi Standardının şartlarına uyan bir yönetim sistemi kurduğunu ve uyguladığını onaylamak üzere verilmiştir.
*to certify that quality management system in accordance with standard's clauses is established and being implemented.*

İlk Yayın Tarihi / *Date of first issue* : 14.09.2023
Belge Tarihi / *Date of issue* : 12.09.2024
Belge Periyodu / *Certificate period* : 3 Yıl/Years
Sertifika Bitiş Tarihi/ *Reissue date* : 13.09.2025
Sertifika No/ *Certificate Number* : KQ.2023.3667

MSCB-223

Ascert Certification
Sertifika Onayı / *System Certificate Approved*

ASCERT CERTIFICATION AND TRAINING SERVICES, LLC

SERTİFİKA • CERTIFICATE • ASCERT • ZERTİFİKAT • CERTIFICAT

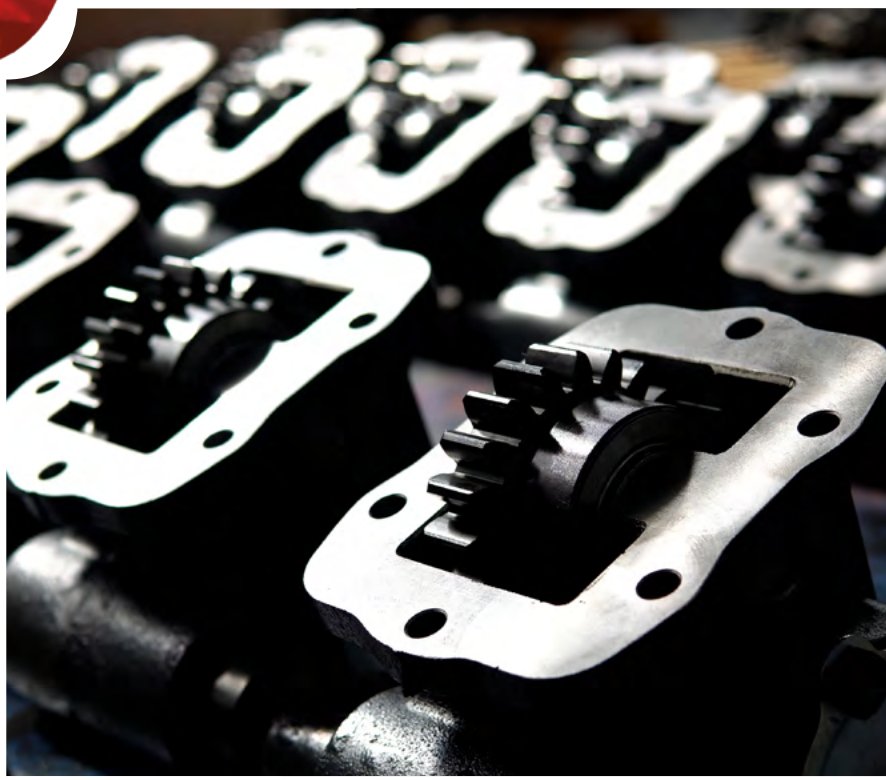

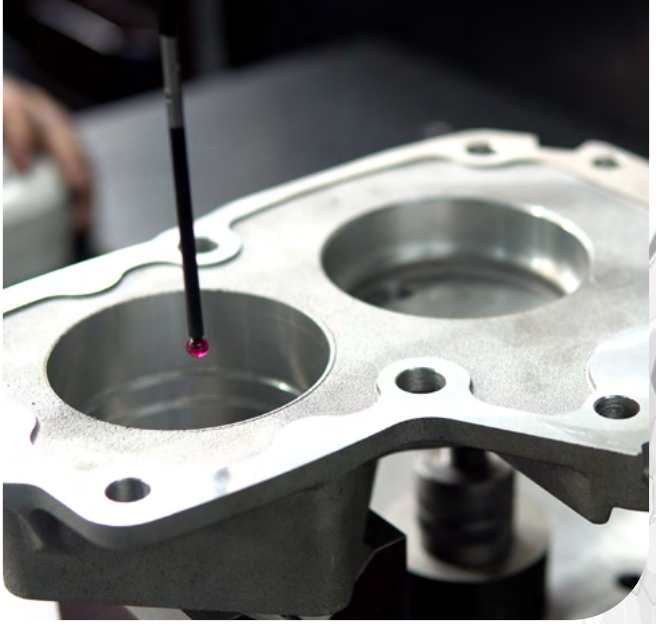

GÜÇLÜ
TECRÜBE

# STRONG EXPERIENCE

Gemma, 30 yılı aşkın tecrübesiyle kaliteli, güvenilir ve standartlara uygun rekabetçi ürünler üreterek, global platformda güçlü bir konuma sahiptir. Stratejik yaklaşımı ve kaliteyi standartlaştırarak bir dünya markası olma yolunda gururla ilerlemektedir. Geleceğe yönelik girişimlerde bulunmayı, istihdam alanları oluşturmayı ve uluslararası başarılara imza atmayı kendine ilke edinmiştir.

Kalitenin sürdürülebilirliği ve müşteri memnuniyetini ilke edinerek bu doğrultuda faaliyet gösteren Gemma, üretim öncesi ve sonrasında alanında deneyimli profesyonel ekibi ve bünyesinde kurduğu Ar-Ge ekibi ile çalışmalarını yürütmektedir. Üretimin her aşamasında gerçekleştirilen kalite kontrol sistemiyle, müşteri memnuniyetini ve kalite standartlarını artırmayı hedeflemektedir.

Sahip olduğu uzun yıllara dayanan deneyim ve bilgi birikimi ile Gemma, profesyonel ekibi ve hizmet ilkeleriyle benzersiz kalite politikasını standartlaştırmış, ulusal ve uluslararası kimliği ile hedef kitlesine mükemmel hizmet sunan öncü bir firma olmayı başarmıştır.

HYDRAULIC GEMMA

# INDEX
İÇİNDEKİLER


## HYDRAULIC PUMPS
HİDROLİK POMPALAR
06 - 47



## POWER TAKE-OFFS
GÜÇ AKTARMA KUTULARI
48 - 182

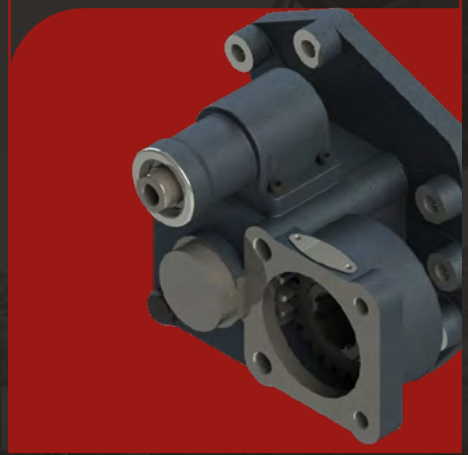

## HYDRAULIC EQUIPMENTS
HİDROLİK EKİPMANLAR
184 - 211



## OIL COOLERS
YAĞ SOĞUTUCULAR
213 - 237



## HYDRAULIC FILTERS
FİLTRELER
239 - 253



# HYDRAULIC PUMPS
HİDROLİK POMPALAR


08 PUMP SELECTION
UYGUN POMPA SEÇİMİ

10 30 SERIES
30 SERİSİ

27 35 SERIES
35 SERİSİ

33 40 SERIES
40 SERİSİ

40 PISTON PUMP
PİSTONLU POMPA



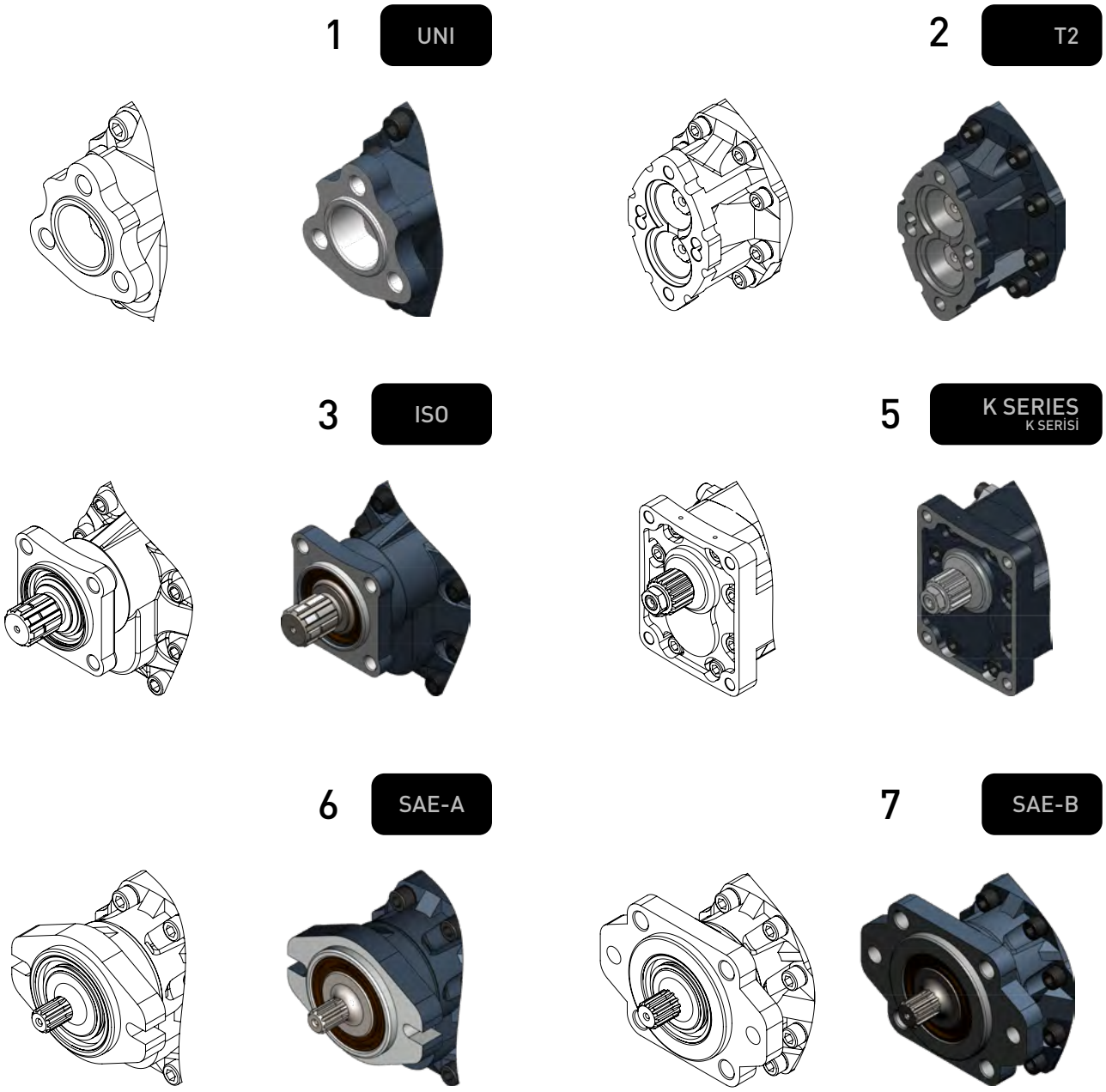


**Diagram 1 Mounting Types** Şekil 1 Bağlantı Tipleri

Entire elements of the system (cylinder, pump, valve, limit control valve, oil, oil tank, hoses, sockets, etc) should be compatible with each other. Elements used without sufficient knowledge negatively affect the pump's life. A pump model having compatible performance values (rotation, pressure, flow rate) with usage objectives should be selected, such as gear pump, axial pump or PISTON PUMPS. Adequate connection type should be defined. (See Diagram 1)

Hidrolik sistemlerde, sistemin bütün elemanları birbiriyle uyumlu olmalıdır (silindir, pompa, ventil, sınır kontrol ventili, yağ, yağ tankı, hortumlar, soketler vb.) Bilinçsiz kullanacağımız elemanlar pompanın ömrünü olumsuz etkiler. Kullanım amacına uygun peformans (devir, basınç, debi) değerlerine sahip bir pompa modeli seçilmelidir. Dişli pompa, eksenel pompa, pistonlu pompa gibi. Uygun bağlantı tipi belirlenmelidir. (Bkz. Şekil 1)

Pump direction is defined according to drive elements such as PTO electric engine. Pump should always be under the tank level. (See diagram 2)

PTO elektrik motoru gibi tahrik elemanlarının yönüne uygun olarak pompa yönü belirlenir. Pompa daima tank seviyesinden altta olmalıdır. (Bkz. Şekil2)

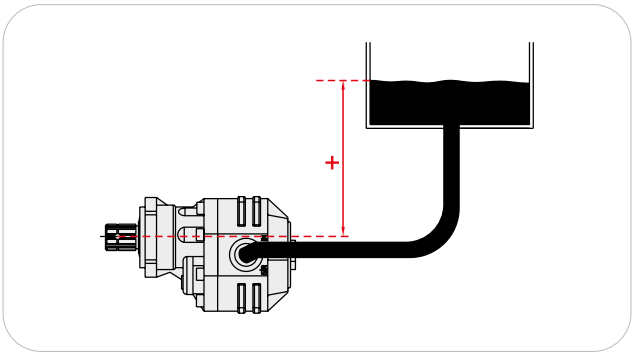

Diagram 2 Şekil 2

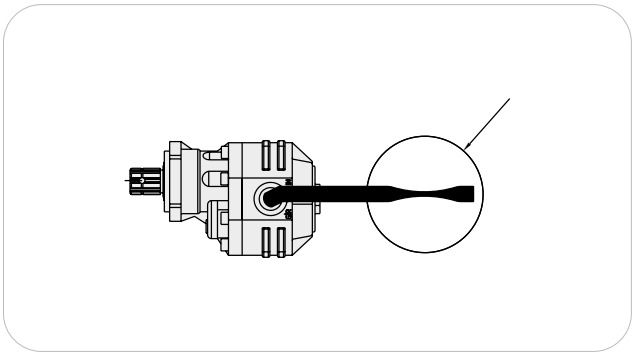

Diagram 3 Şekil 3

Hose and connector measures of the entire installation should be the same with intake and outlet connector measures indicated in the catalogue. Oil intake hose should be in a quality as not to be affected from the pump suction. Contractions on inadequate intake hoses (Diagram 3) negatively affect the pump's life. No contractions should be seen on other feeding line passage points even if the pump intake connector is adequate (See table 1).

Tüm tesisatın hortum ve rakor ölçüleri katalogumuzda belirtilen giriş çıkış rakorları ile aynı olmalıdır. Yağ giriş hortumu, pompanın emişinden etkilenmeyecek kalitede olmalıdır. Uygun olmayan giriş hortumlarında Şekil3de oluşan daralmalar pompanın ömrünü olumsuz etkiler. Pompa giriş rakoru uygun olsa bile besleme hattındaki diğer geçiş noktalarında katalogda belirtilen çapların altında bir daralma olmamalıdır. (Bkz. Tablo1)

Intake and outlet sockets on Dorsey Dumpers should be on requested measures. The filter used should be selected according to filter list. Plastic guards on oil intake and outlet holes should be removed and connectors should be set in immediately. Oil tank and installation cleanliness should be controlled and the oil tank air intake-outlet should be comfortable. We suggest you to connect the oil filter to the pressure line. The tank should be completely filled with adequate oil (See Table 1) and be left to rest for acouple of hours.

Dorse damperlerde giriş ve çıkış soketleri istenilen ölçüde olmalıdır. Takılacak filtre pompa litresine uygun seçilmelidir. Yağ giriş çıkış deliklerindeki plastik koruyucular, pompa yerine takıldıktan sonra sökülmeli ve hemen rakorları bağlanmalıdır. Yağ deposu ve tesisatın temizliği kontrol edilmeli, yağ deposunun hava giriş çıkışı rahat olmalıdır. Firmamız yağ filtresini basınç hattına bağlamanızı tavsiye eder. Depo pompa için belirtilen uygun yağ (Bkz. Tablo 1) ile tamamen doldurulmalı ve birkaç saat dinlendirilmelidir.

| | WINTER MONTHS / KIŞ AYLARINDA | SUMMER MONTHS / YAZ AYLARINDA |
|---|---|---|
| BRAND / MARKA | ISO 32 | ISO 46 |
| BP | ENERGOL HLP 32 | ENERGOL HLP 46 |
| MOBIL | D.T.E 24 | D.T.E 25 |
| SHELL | TELLUS 32 | TELLUS 46 |
| PETROL OFİSİ | RANDO OIL HD 32 | RANDO OIL HD 46 |

Table 2 Tablo 2

You should control that the installation is completely filled with oil till pump intake level and that all valves are open before the cold start. Never start the pump without oil. Cold start should be for a couple of minutes under low rotation (idle running for trucks) and the pump's normal operation and noise level and oil leaks should be observed. The system should be immediately stopped in an abnormal situation to prevent any damage and should be controlled again. Discharge hole seen of Fig. 4 is designed to detect easily defects and leaks on oil seals. Oil discharge hole should be frequently controlled by the operator.

İlk çalıştırma yapılmadan önce tesisatın pompa girişine kadar yağla dolu olduğu ve tüm vanaların açık olduğu kontrol edilmeli, bir anlık bile olsa pompa yağsız çalıştırılmamalıdır. İlk çalıştırma basınç olmaksızın düşük devirde (kamyonlar için rölantide) birkaç dakika olmalı, pompanın normal çalışması, gürültü seviyesi, yağ kaçakları gözlenmelidir. Anormal durumda sistemin zarar görmemesi için derhal durdurulmalı ve tekrar kontrol edilmelidir. Şekil 4de görülen tahliye deliği yağ keçelerindeki arıza ve kaçağın kolay anlaşılması için dizayn edilmiştir. Yağ tahliye deliği operatör tarafından sık sık kontrol edilmelidir.

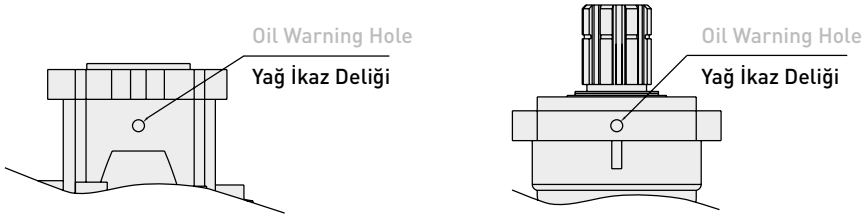


Maximum speed indicated on the catalogue should never be exceeded when the pump operates normally. Periods of continuous pressure application on the pump should never exceed catalogue values. Pressure adjustments of valves on the installation should never be changed for they are set up by sensitive measurement devices during the production. Ideal oil temperature is 50°- 60°. The pump can be continually operated between 0° and 80°. The installation's periodical maintenance (oil quality, filter cleaning, pressure adjustments, visual controls, etc) should never be neglected even if the system operates normally.
Please contact our service department in any problem.

Pompa normal çalışırken katalogda belirtilen maksimum devirlerin üzerine kesinlikle çıkılmamalıdır. Pompaya sürekli basınç uygulama süreleri kesinlikle katalog değerlerinin üzerinde olmamalıdır. Tesisattaki valflerin basınç ayarları üretim esnasında hassas ölçü aletleriyle yapıldığı için kesinlikle değiştirilmemelidir. İdeal yağ sıcaklığı 50°- 60° dir. Pompa 0°-80° arasında sürekli çalıştırılabilir. Sistem normal çalışsa bile tesisatın periyodik bakımları (yağ kalitesi, filtre temizliği, basınç ayarları, görsel kontroller vb.) ihmal edilmemelidir.Olası problemlerde servisimizle irtibat kurunuz.

# 30 BI-ROTATIONAL UNI 4 PORTS

## 30 ÇİFT DÖNÜŞLÜ UNI 4 PORTLU



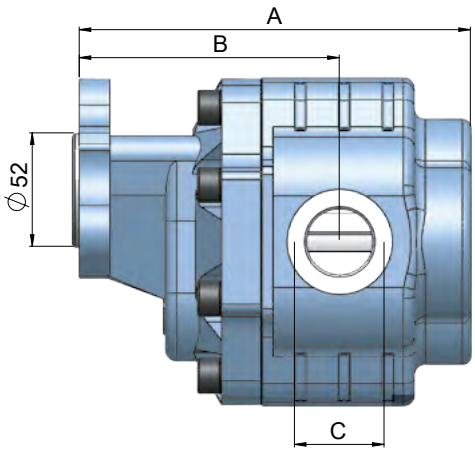


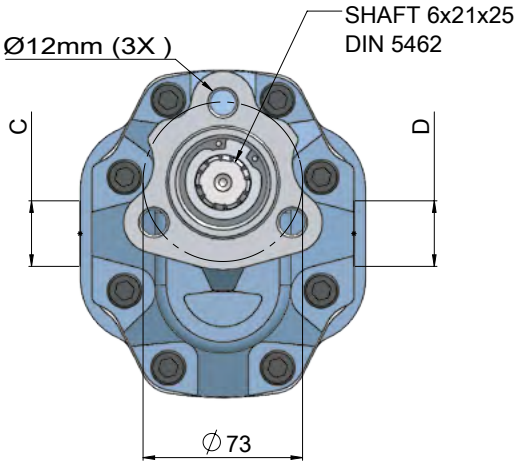


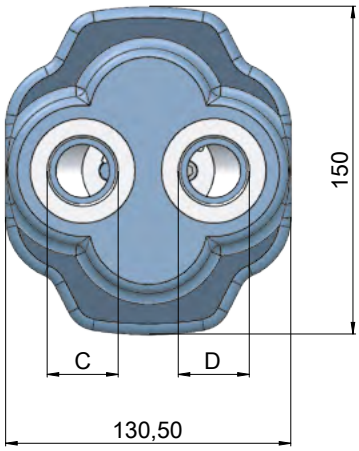


| CODE<br>KOD | ROTATION<br>YÖN | DISPLACEMENT<br>DEBİ (Lt/min) | A<br>(mm) | B<br>(mm) | INLET<br>GİRİŞ (C) | OUTLET<br>ÇIKIŞ (D) | Max. Continuous Pressure<br>Max. Sürekli Basınç(Pnom) | Max. Peak Pressure<br>Max. Pik Basınç (Pmax) |
|---|---|---|---|---|---|---|---|---|
| 33003441 | BI-ROTATIONAL-ÇİFT | 34 | 178 | 125 | R3/4"-14 | R3/4"-14 | 250 | 280 |
| 33004341 | BI-ROTATIONAL-ÇİFT | 43 | 186 | 128 | | | 240 | 270 |
| 33005141 | BI-ROTATIONAL-ÇİFT | 51 | 189 | 130 | R1"-14 | R1"-14 | 220 | 250 |
| 33006141 | BI-ROTATIONAL-ÇİFT | 61 | 195 | 131 | | | 210 | 240 |
| 33008241 | BI-ROTATIONAL-ÇİFT | 82 | 205 | 140 | | | 180 | 220 |

# 30 SINGLE ROTATIONAL UNI

## 30 TEK DÖNÜŞLÜ UNI

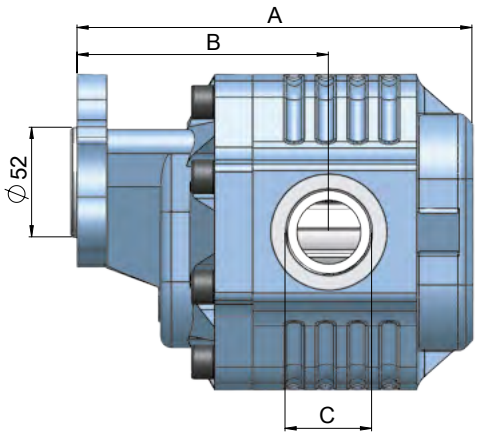




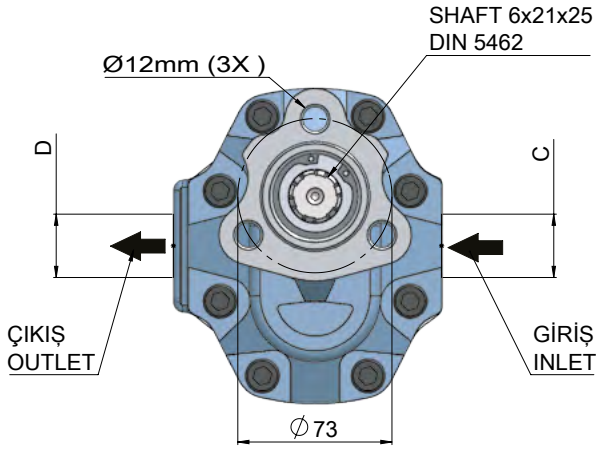


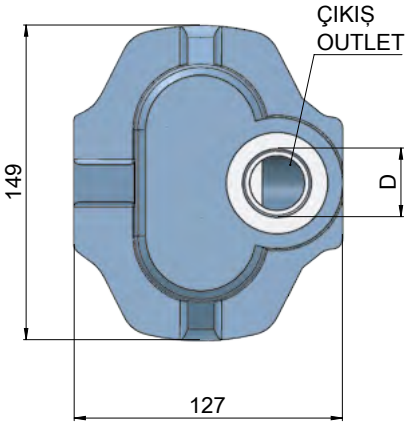


| CODE<br>KOD | ROTATION<br>YÖN | DISPLACEMENT<br>DEBİ (Lt/min) | A<br>(mm) | B<br>(mm) | INLET<br>GİRİŞ (C) | OUTLET<br>ÇIKIŞ (D) | Max. Continuous Pressure<br>Max. Sürekli Basınç(Pnom) | Max. Peak Pressure<br>Max. Pik Basınç (Pmax) |
|---|---|---|---|---|---|---|---|---|
| 33001711 | RIGHT/SAĞ | 17 | 150,5 | 105,5 | R1/2"-14 | R1/2"-14 | 265 | 300 |
| 33001712 | LEFT/SOL | | | | | | | |
| 33002711 | RIGHT/SAĞ | 27 | 157,5 | 109,5 | R3/4"-14 | R3/4"-14 | 260 | 290 |
| 33002712 | LEFT/SOL | | | | | | | |
| 33003411 | RIGHT/SAĞ | 34 | 162,5 | 111,5 | | | 250 | 280 |
| 33003412 | LEFT/SOL | | | | | | | |
| 33004311 | RIGHT/SAĞ | 43 | 169,5 | 114,5 | R1"-11 | | 240 | 270 |
| 33004312 | LEFT/SOL | | | | | | | |
| 33005111 | RIGHT/SAĞ | 51 | 172,5 | 116,5 | | R1"-11 | 220 | 250 |
| 33005112 | LEFT/SOL | | | | | | | |
| 33006111 | RIGHT/SAĞ | 61 | 180,5 | 117,5 | R1 1/4"-11 | | 210 | 240 |
| 33006112 | LEFT/SOL | | | | | | | |
| 33008211 | RIGHT/SAĞ | 82 | 294,5 | 126,5 | | | 180 | 220 |
| 33008212 | LEFT/SOL | | | | | | | |

# 30 BI-ROTATIONAL ISO 4 PORTS

## 30 ÇİFT DÖNÜŞLÜ ISO 4 PORTLU



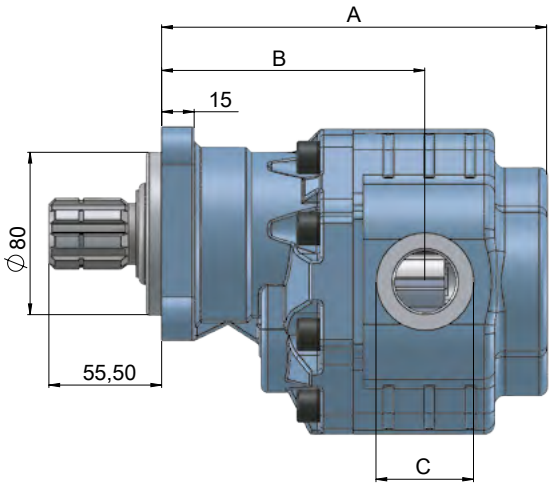


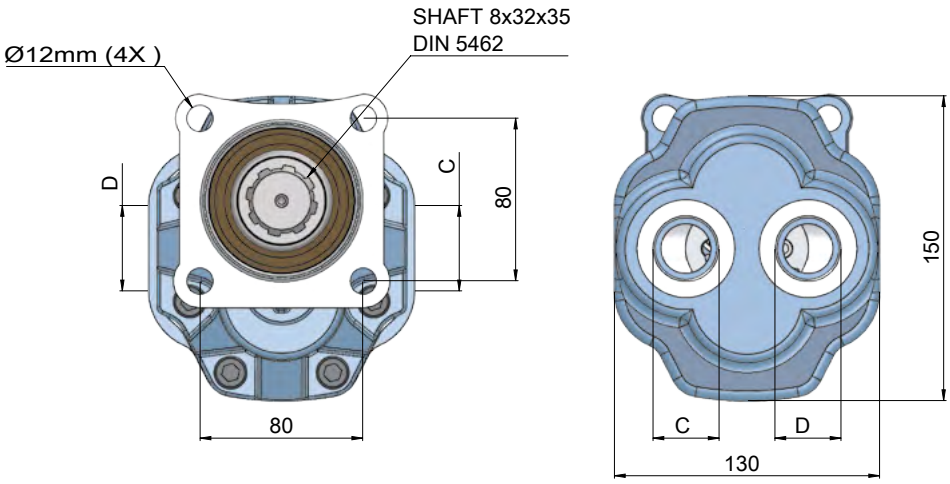


| CODE<br>KOD | ROTATION<br>YÖN | DISPLACEMENT<br>DEBİ (Lt/min) | A<br>(mm) | B<br>(mm) | INLET<br>GİRİŞ (C) | OUTLET<br>ÇIKIŞ (D) | Max. Continuous Pressure<br>Max. Sürekli Basınç(Pnom) | Max. Peak Pressure<br>Max. Pik Basınç (Pmax) |
|---|---|---|---|---|---|---|---|---|
| 33003451 | BI-ROTATIONAL-ÇİFT | 34 | 185 | 132 | R3/4"-14 | R3/4"-14 | 250 | 280 |
| 33004351 | BI-ROTATIONAL-ÇİFT | 43 | 193 | 135 | | | 240 | 270 |
| 33005151 | BI-ROTATIONAL-ÇİFT | 51 | 196 | 137 | R1"-14 | R1"-14 | 220 | 250 |
| 33006151 | BI-ROTATIONAL-ÇİFT | 61 | 202 | 138 | | | 210 | 240 |
| 33008251 | BI-ROTATIONAL-ÇİFT | 82 | 212 | 147 | | | 180 | 220 |

# 30 SINGLE ROTATION ISO

## 30 TEK DÖNÜŞLÜ ISO

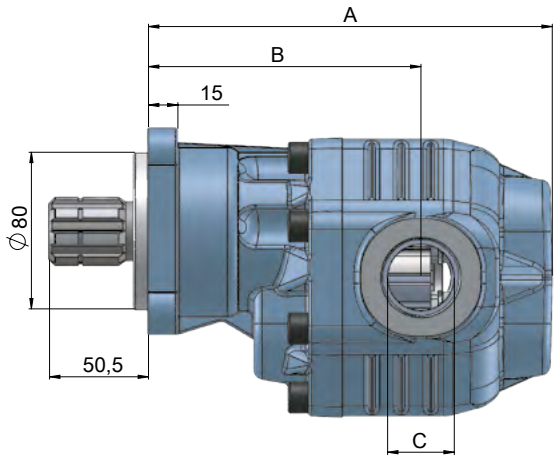




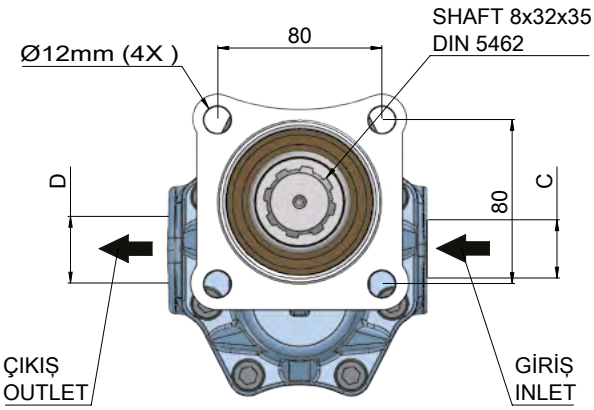


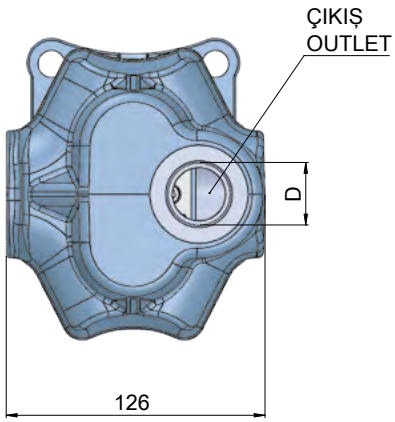


| POMPA KODU PUMP CODES | ROTATION YÖN | DISPLACEMENT DEBİ (Lt/min) | A (mm) | B (mm) | INLET GİRİŞ (C) | OUTLET ÇIKIŞ (D) | Max. Continuous Pressure Max. Sürekli Basınç(Pnom) | Max. Peak Pressure Max. Pik Basınç (Pmax) |
|---|---|---|---|---|---|---|---|---|
| 33001731 | RIGHT/SAĞ | 17 | 201 | 126 | R1/2"-14 | R1/2"-14 | 265 | 300 |
| 33001732 | LEFT/SOL | | | | | | | |
| 33002731 | RIGHT/SAĞ | 27 | 208 | 130 | R3/4"-14 | R3/4"-14 | 260 | 290 |
| 33002732 | LEFT/SOL | | | | | | | |
| 33003431 | RIGHT/SAĞ | 34 | 183 | 132 | | | 250 | 280 |
| 33003432 | LEFT/SOL | | | | | | | |
| 33004331 | RIGHT/SAĞ | 43 | 190 | 135 | R1"-11 | | 240 | 270 |
| 33004332 | LEFT/SOL | | | | | | | |
| 33005131 | RIGHT/SAĞ | 51 | 193 | 137 | | R1"-11 | 220 | 250 |
| 33005132 | LEFT/SOL | | | | | | | |
| 33006131 | RIGHT/SAĞ | 61 | 201 | 138 | R1 1/4"-11 | | 210 | 240 |
| 33006132 | LEFT/SOL | | | | | | | |
| 33008231 | RIGHT/SAĞ | 82 | 315 | 147 | | | 180 | 220 |
| 33008232 | LEFT/SOL | | | | | | | |

# 30 DPM MECHANIC VALVE BI-ROTATIONAL

## 30 DPM MEKANİK VENTİLLİ ÇİFT DÖNÜŞLÜ



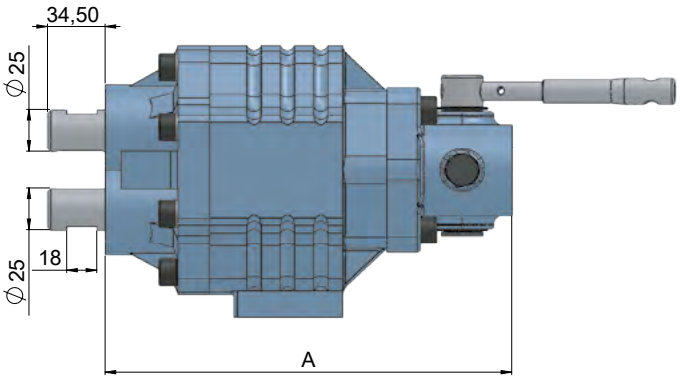


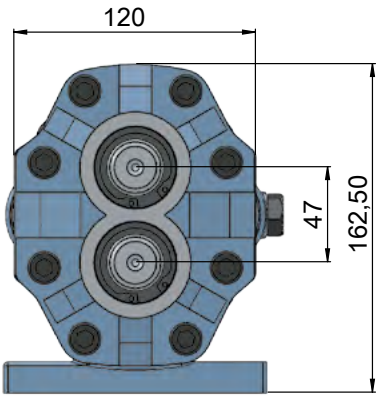


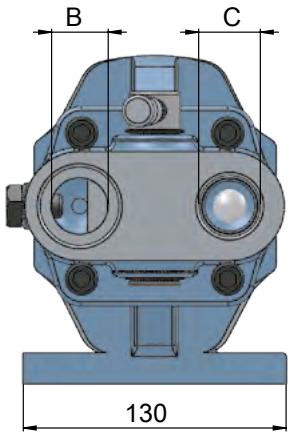


| CODE<br>KOD | ROTATION<br>YÖN | DISPLACEMENT<br>DEBİ (Lt/min) | A<br>(mm) | INLET<br>GİRİŞ (B) | OUTLET<br>ÇIKIŞ (C) | Max. Continuous Pressure<br>Max. Sürekli Basınç(Pnom) | Max. Peak Pressure<br>Max. Pik Basınç (Pmax) |
|---|---|---|---|---|---|---|---|
| 33004371 | BI-ROTATIONAL-ÇİFT | 43 | 220 | R1 1/4"-11 | R1"-11 | 240 | 270 |
| 33006171 | BI-ROTATIONAL-ÇİFT | 61 | 230 | | | 210 | 240 |
| 33008271 | BI-ROTATIONAL-ÇİFT | 82 | 243 | | | 180 | 220 |

# 30 DPV PNEUMATIC VALVES BI-ROTATIONAL

## 30 DPV PNÖMATİK VENTİLLİ ÇİFT DÖNÜŞLÜ

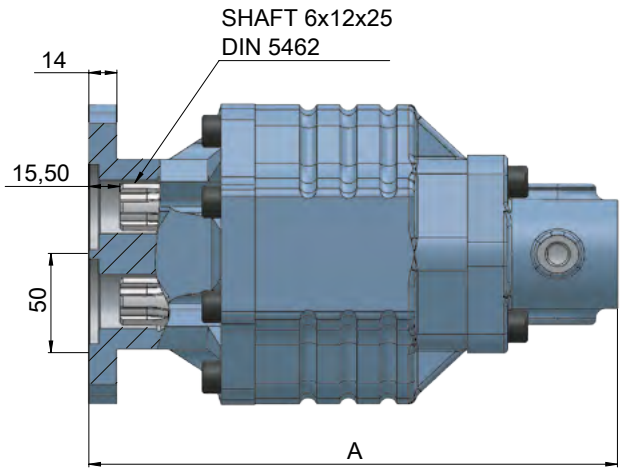




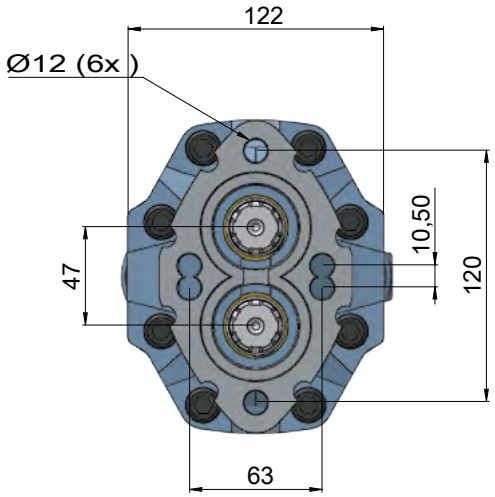


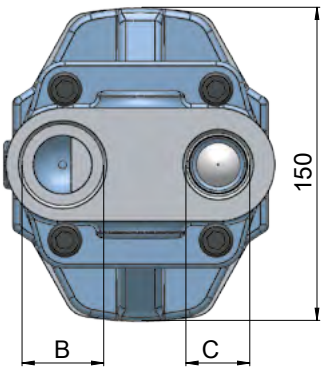


| CODE<br>KOD | ROTATION<br>YÖN | DISPLACEMENT<br>DEBİ (Lt/min) | A<br>(mm) | INLET<br>GİRİŞ (B) | OUTLET<br>ÇIKIŞ (C) | Max. Continuous Pressure<br>Max. Sürekli Basınç(Pnom) | Max. Peak Pressure<br>Max. Pik Basınç (Pmax) |
|---|---|---|---|---|---|---|---|
| 33006181 | BI-ROTATIONAL-ÇİFT | 61 | 237 | R1 1/4"-11 | R1"-11 | 210 | 240 |
| 33008281 | BI-ROTATIONAL-ÇİFT | 82 | 247 | | | 180 | 220 |
| 33009581 | BI-ROTATIONAL-ÇİFT | 95 | 258 | | | 170 | 210 |

# 30 DPV PNEUMATIC VALVE SINGLE ROTATIONAL

## 30 DPV PNÖMATİK VENTİLLİ TEK DÖNÜŞLÜ



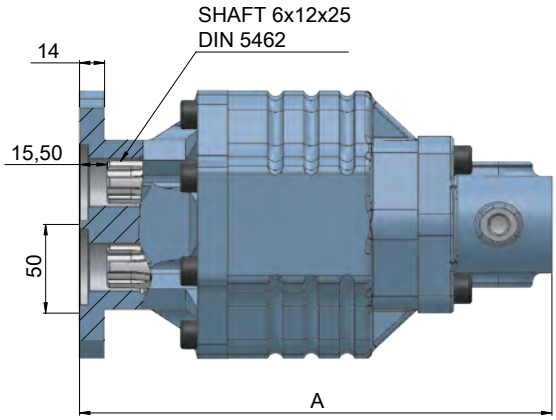


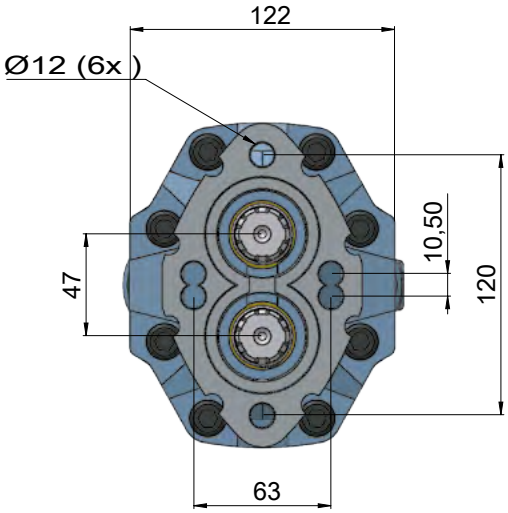


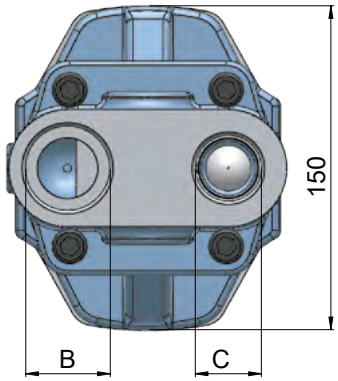


| CODE<br>KOD | ROTATION<br>YÖN | DISPLACEMENT<br>DEBİ (Lt/min) | A<br>(mm) | INLET<br>GİRİŞ (B) | OUTLET<br>ÇIKIŞ (C) | Max. Continuous Pressure<br>Max. Sürekli Basınç(Pnom) | Max. Peak Pressure<br>Max. Pik Basınç (Pmax) |
|---|---|---|---|---|---|---|---|
| 33006182 | RIGHT/SAĞ | 61 | 240 | R1 1/4"-11 | R1"-11 | 210 | 240 |
| 33006183 | LEFT/SOL | | | | | | |
| 33008282 | RIGHT/SAĞ | 82 | 264 | | | 210 | 264 |
| 33008283 | LEFT/SOL | | | | | | |

# 30 K SERIES

## 30 K SERİSİ

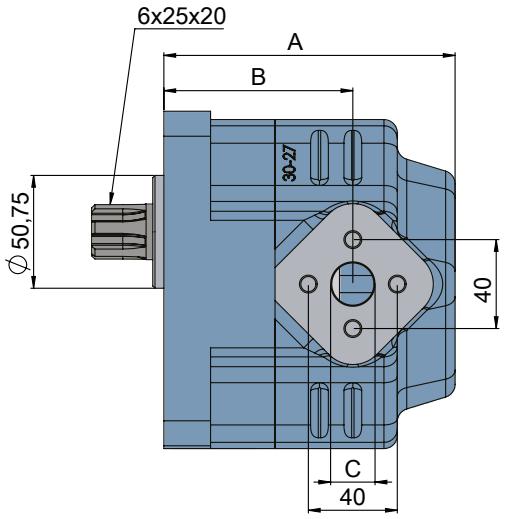





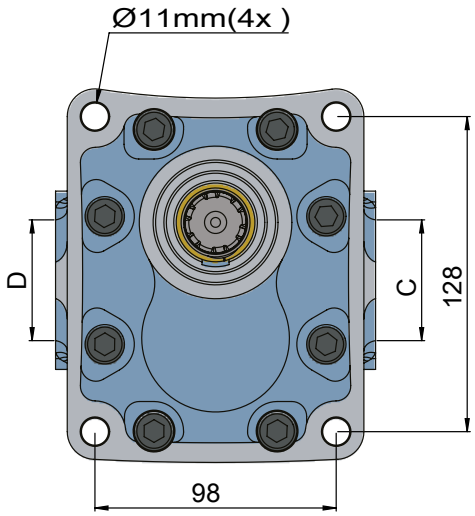


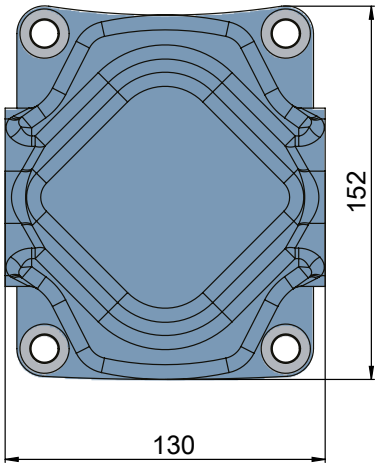


| CODE<br>KOD | ROTATION<br>YÖN | DISPLACEMENT<br>DEBİ (Lt/min) | A<br>(mm) | B<br>(mm) | INLET<br>GİRİŞ (C) | OUTLET<br>ÇIKIŞ (D) | Max. Continuous Pressure<br>Max. Sürekli Basınç(Pnom) | Max. Peak Pressure<br>Max. Pik Basınç (Pmax) |
|---|---|---|---|---|---|---|---|---|
| 33601711 | RIGHT/SAĞ | 17 | 125 | 79 | Ø27-M10x4 | Ø19-M8x4 | 265 | 300 |
| 33601712 | LEFT/SOL | | | | | | | |
| 33602711 | RIGHT/SAĞ | 27 | 131 | 85 | | | 260 | 290 |
| 33602712 | LEFT/SOL | | | | | | | |
| 33603411 | RIGHT/SAĞ | 34 | 136 | 90 | | | 250 | 280 |
| 33603412 | LEFT/SOL | | | | | | | |
| 33604311 | RIGHT/SAĞ | 43 | 142 | 96 | | | 240 | 270 |
| 33604312 | LEFT/SOL | | | | | | | |
| 33605111 | RIGHT/SAĞ | 51 | 147 | 101 | | | 220 | 250 |
| 33605112 | LEFT/SOL | | | | | | | |
| 33606111 | RIGHT/SAĞ | 61 | 152 | 106 | | | 210 | 240 |
| 33606112 | LEFT/SOL | | | | | | | |

# 30 K SERIES CONICAL SHAFT
## 30 K SERİSİ KONİK MİL



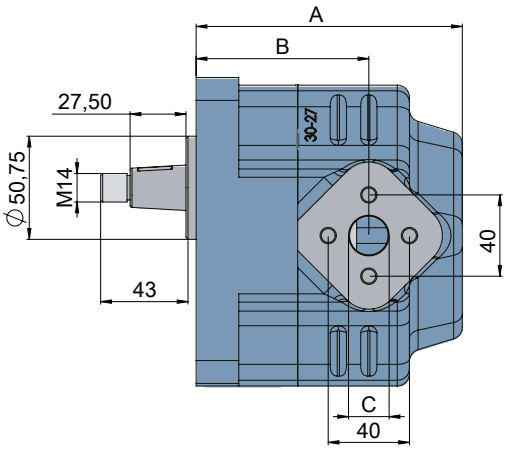


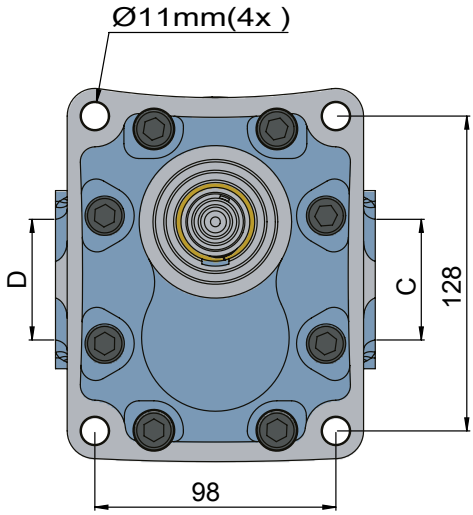


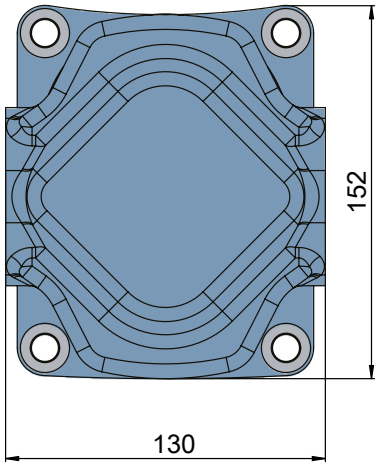


| CODE<br>KOD | ROTATION<br>YÖN | DISPLACEMENT<br>DEBİ (Lt/min) | A<br>(mm) | B<br>(mm) | INLET<br>GİRİŞ (C) | OUTLET<br>ÇIKIŞ (D) | Max. Continuous Pressure<br>Max. Sürekli Basınç(Pnom) | Max. Peak Pressure<br>Max. Pik Basınç (Pmax) |
|---|---|---|---|---|---|---|---|---|
| 33611711 | RIGHT/SAĞ | 17 | 125 | 79 | Ø27-M10x4 | Ø19-M8x4 | 265 | 300 |
| 33611712 | LEFT/SOL | | | | | | | |
| 33612711 | RIGHT/SAĞ | 27 | 131 | 85 | | | 260 | 290 |
| 33612712 | LEFT/SOL | | | | | | | |
| 33613411 | RIGHT/SAĞ | 34 | 136 | 90 | | | 250 | 280 |
| 33613412 | LEFT/SOL | | | | | | | |
| 33614311 | RIGHT/SAĞ | 43 | 142 | 96 | | | 240 | 270 |
| 33614312 | LEFT/SOL | | | | | | | |
| 33615111 | RIGHT/SAĞ | 51 | 147 | 101 | | | 220 | 250 |
| 33615112 | LEFT/SOL | | | | | | | |
| 33616111 | RIGHT/SAĞ | 61 | 152 | 106 | | | 210 | 240 |
| 33616112 | LEFT/SOL | | | | | | | |

# 30 PF SERIES BI-ROTATIONAL ISO

## 30 PF SERİSİ ÇİFT DÖNÜŞLÜ ISO

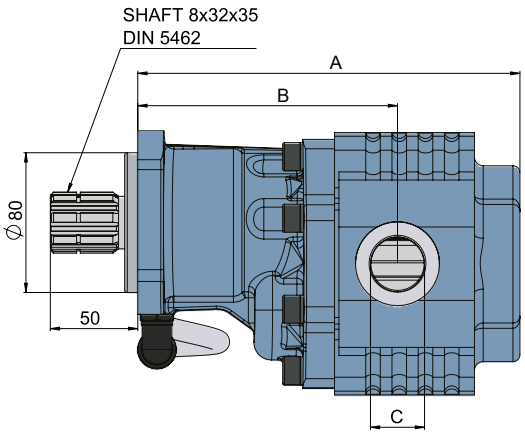




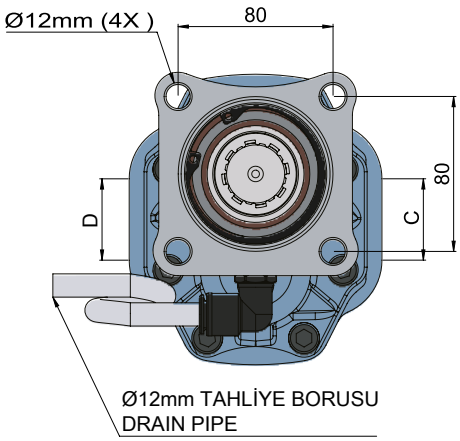


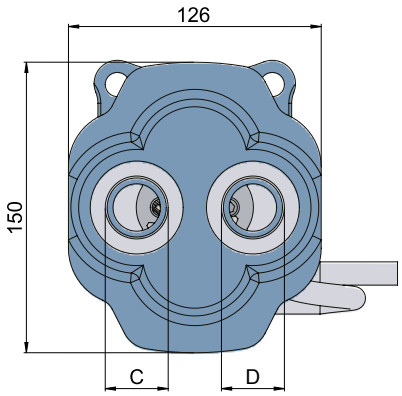


| CODE<br>KOD | ROTATION<br>YÖN | DISPLACEMENT<br>DEBİ (Lt/min) | A<br>(mm) | B<br>(mm) | INLET<br>GİRİŞ (C) | OUTLET<br>ÇIKIŞ (D) | Max. Continuous Pressure<br>Max. Sürekli Basınç(Pnom) | Max. Peak Pressure<br>Max. Pik Basınç (Pmax) |
|---|---|---|---|---|---|---|---|---|
| PF33003451 | BI-ROTATIONAL-ÇİFT | 34 | 199 | 146 | R3/4"-14 | R3/4"-14 | 250 | 280 |
| PF33004351 | BI-ROTATIONAL-ÇİFT | 43 | 207 | 149 | | | 240 | 270 |
| PF33005151 | BI-ROTATIONAL-ÇİFT | 51 | 210 | 151 | R1"-14 | R1"-14 | 220 | 250 |
| PF33006151 | BI-ROTATIONAL-ÇİFT | 61 | 216 | 152 | | | 210 | 240 |
| PF33008251 | BI-ROTATIONAL-ÇİFT | 82 | 226 | 161 | | | 180 | 220 |

# 30 PF SERIES SINGLE ROTATIONAL ISO

## 30 PF SERİSİ TEK DÖNÜŞLÜ İSO



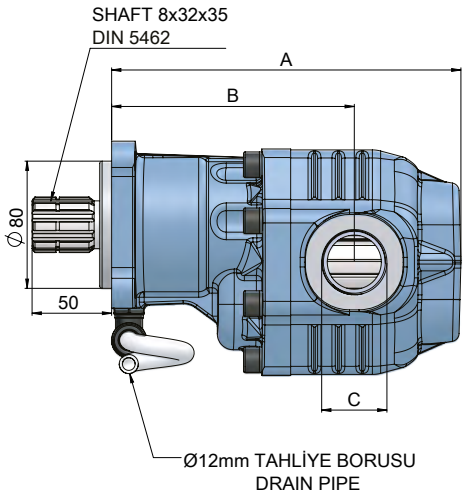


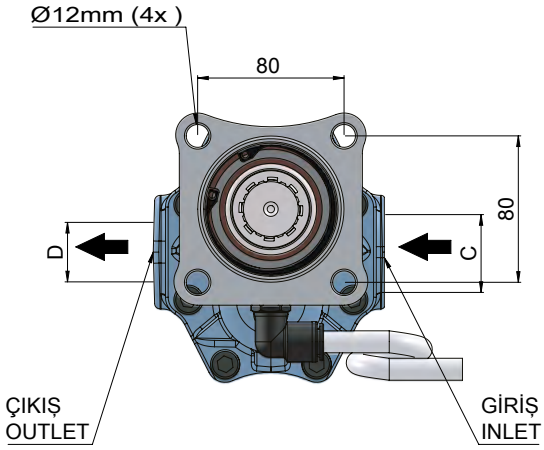


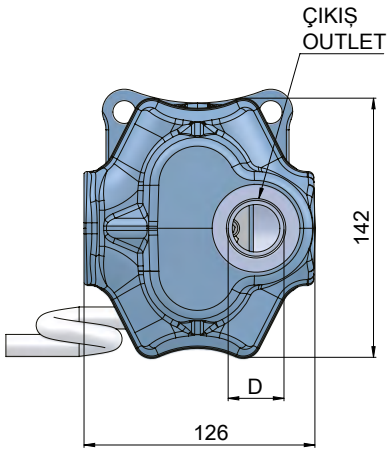


| CODE<br>KOD | ROTATION<br>YÖN | DISPLACEMENT<br>DEBİ (Lt/min) | A<br>(mm) | B<br>(mm) | INLET<br>GİRİŞ (C) | OUTLET<br>ÇIKIŞ (D) | Max. Continuous Pressure<br>Max. Sürekli Basınç(Pnom) | Max. Peak Pressure<br>Max. Pik Basınç (Pmax) |
|---|---|---|---|---|---|---|---|---|
| PF33001731 | RIGHT/SAĞ | 17 | 179 | 134 | R1/2"-14 | R1/2"-14 | 265 | 300 |
| PF33001732 | LEFT/SOL | | | | | | | |
| PF33002731 | RIGHT/SAĞ | 27 | 186 | 138 | R3/4"-14 | R3/4"-14 | 260 | 290 |
| PF33002732 | LEFT/SOL | | | | | | | |
| PF33003431 | RIGHT/SAĞ | 34 | 191 | 140 | | | 250 | 280 |
| PF33003432 | LEFT/SOL | | | | | | | |
| PF33004331 | RIGHT/SAĞ | 43 | 198 | 143 | R1"-11 | | 240 | 270 |
| PF33004332 | LEFT/SOL | | | | | | | |
| PF33005131 | RIGHT/SAĞ | 51 | 201 | 145 | | R1"-11 | 220 | 250 |
| PF33005132 | LEFT/SOL | | | | | | | |
| PF33006131 | RIGHT/SAĞ | 61 | 209 | 146 | R1 1/4"-11 | | 210 | 240 |
| PF33006132 | LEFT/SOL | | | | | | | |
| PF33008131 | RIGHT/SAĞ | 82 | 323 | 155 | | | 180 | 220 |
| PF33008132 | LEFT/SOL | | | | | | | |

# 30 SAE A SERIES BI-ROTATIONAL

## 30 SAE A SERİSİ ÇİFT DÖNÜŞLÜ

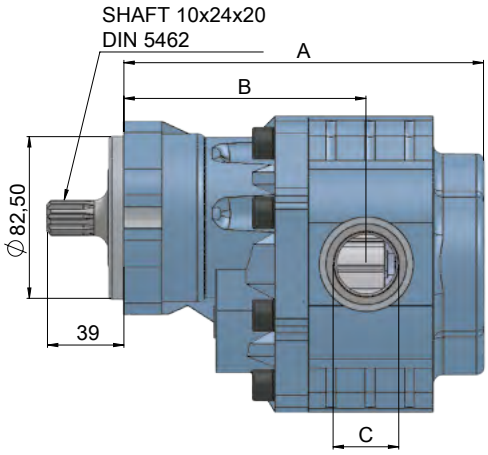




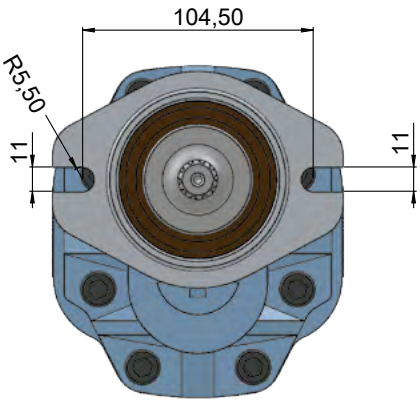


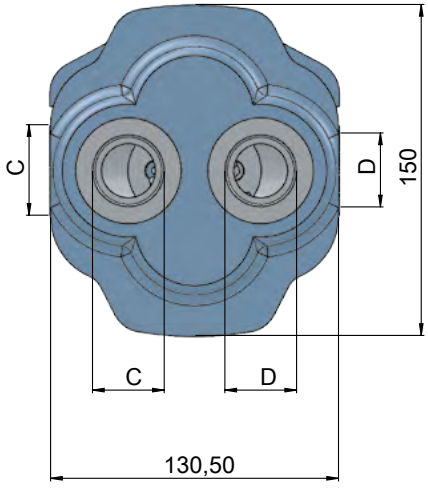


| CODE<br>KOD | ROTATION<br>YÖN | DISPLACEMENT<br>DEBİ (Lt/min) | A<br>(mm) | B<br>(mm) | INLET<br>GİRİŞ (C) | OUTLET<br>ÇIKIŞ (D) | Max. Continuous Pressure<br>Max. Sürekli Basınç(Pnom) | Max. Peak Pressure<br>Max. Pik Basınç (Pmax) |
|---|---|---|---|---|---|---|---|---|
| 33003461 | BI-ROTATIONAL-ÇİFT | 34 | 199 | 146 | R3/4"-14 | R3/4"-14 | 250 | 280 |
| 33004361 | BI-ROTATIONAL-ÇİFT | 43 | 207 | 149 | | | 240 | 270 |
| 33005161 | BI-ROTATIONAL-ÇİFT | 51 | 210 | 151 | R1"-14 | R1"-14 | 220 | 250 |
| 33006161 | BI-ROTATIONAL-ÇİFT | 61 | 216 | 152 | | | 210 | 240 |
| 33008261 | BI-ROTATIONAL-ÇİFT | 82 | 226 | 161 | | | 180 | 220 |

# 30 SAE A SERIES SINGLE ROTATIONAL

## 30 SAE A SERİSİ TEK DÖNÜŞLÜ



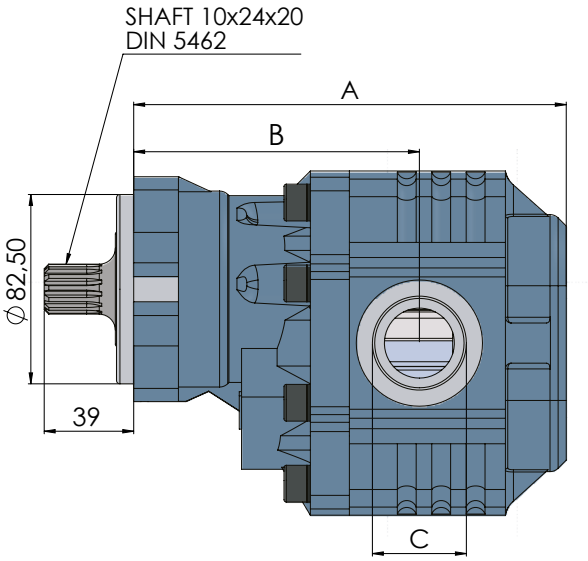


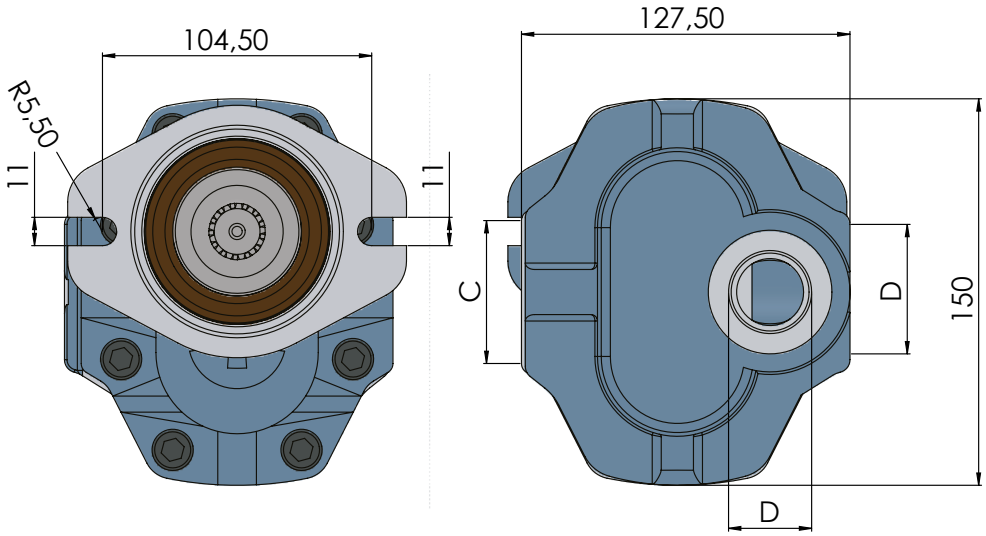


| CODE<br>KOD | ROTATION<br>YÖN | DISPLACEMENT<br>DEBİ (Lt/min) | A<br>(mm) | B<br>(mm) | INLET<br>GİRİŞ (C) | OUTLET<br>ÇIKIŞ (D) | Max. Continuous Pressure<br>Max. Sürekli Basınç(Pnom) | Max. Peak Pressure<br>Max. Pik Basınç (Pmax) |
|---|---|---|---|---|---|---|---|---|
| 33001762 | RIGHT/SAĞ | 17 | 171 | 126 | R1/2"-14 | R1/2"-14 | 265 | 300 |
| 33001763 | LEFT/SOL | | | | | | | |
| 33002762 | RIGHT/SAĞ | 27 | 178 | 130 | R3/4"-14 | R3/4"-14 | 260 | 290 |
| 33002763 | LEFT/SOL | | | | | | | |
| 33003462 | RIGHT/SAĞ | 34 | 183 | 132 | | | 250 | 280 |
| 33003463 | LEFT/SOL | | | | | | | |
| 33004362 | RIGHT/SAĞ | 43 | 190 | 135 | R1"-11 | | 240 | 270 |
| 33004363 | LEFT/SOL | | | | | | | |
| 33005162 | RIGHT/SAĞ | 51 | 193 | 137 | | R1"-11 | 220 | 250 |
| 33005163 | LEFT/SOL | | | | | | | |
| 33006162 | RIGHT/SAĞ | 61 | 201 | 138 | R1 1/4"-11 | | 210 | 240 |
| 33006163 | LEFT/SOL | | | | | | | |
| 33008262 | RIGHT/SAĞ | 82 | 315 | 147 | | | 180 | 220 |
| 33008263 | LEFT/SOL | | | | | | | |

# 30 SAE B SERIES BI-ROTATIONAL

## 30 SAE B SERİSİ ÇİFT DÖNÜŞLÜ

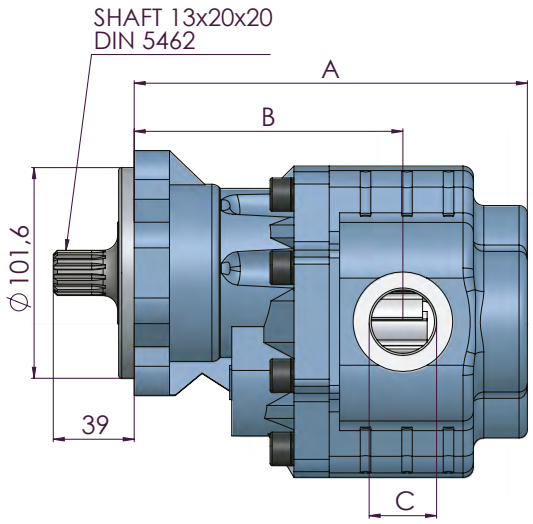




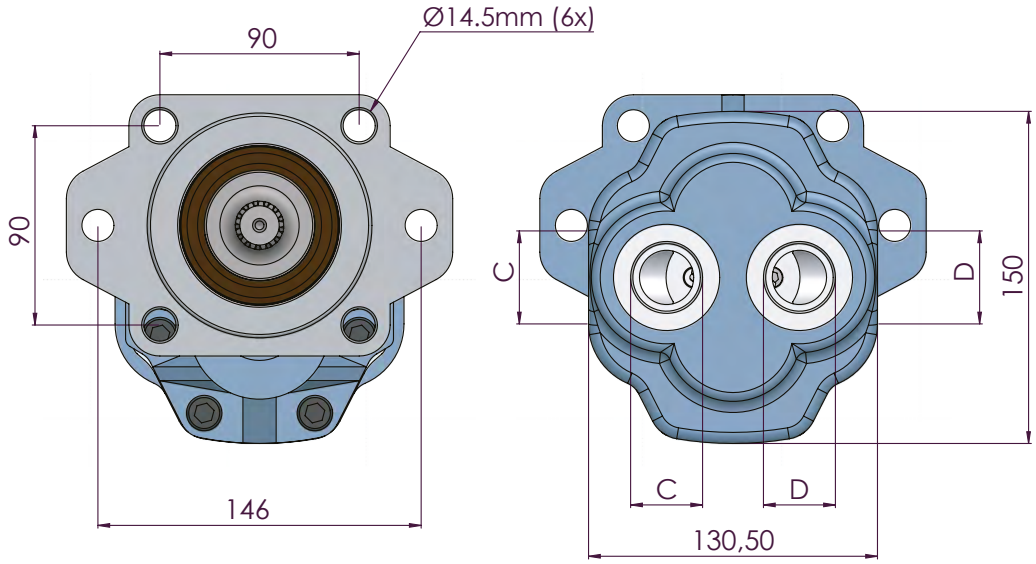


| CODE<br>KOD | ROTATION<br>YÖN | DISPLACEMENT<br>DEBİ (Lt/min) | A<br>(mm) | B<br>(mm) | INLET<br>GİRİŞ (C) | OUTLET<br>ÇIKIŞ (D) | Max. Continuous Pressure<br>Max. Sürekli Basınç(Pnom) | Max. Peak Pressure<br>Max. Pik Basınç (Pmax) |
|---|---|---|---|---|---|---|---|---|
| 33003471 | BI-ROTATIONAL-ÇİFT | 34 | 199 | 146 | R3/4"-14 | R3/4"-14 | 250 | 280 |
| 33004371 | BI-ROTATIONAL-ÇİFT | 43 | 207 | 149 | | | 240 | 270 |
| 33005171 | BI-ROTATIONAL-ÇİFT | 51 | 210 | 151 | R1"-14 | R1"-14 | 220 | 250 |
| 33006171 | BI-ROTATIONAL-ÇİFT | 61 | 216 | 152 | | | 210 | 240 |
| 33008271 | BI-ROTATIONAL-ÇİFT | 82 | 226 | 161 | | | 180 | 220 |

# 30 SAE B SERIES SINGLE ROTATIONAL
## 30 SAE B SERİSİ TEK DÖNÜŞLÜ



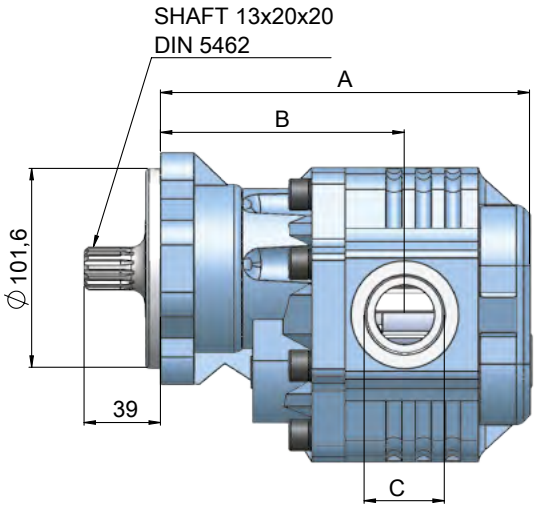


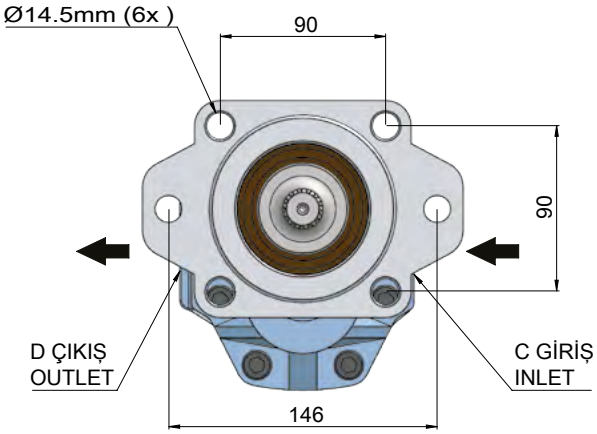


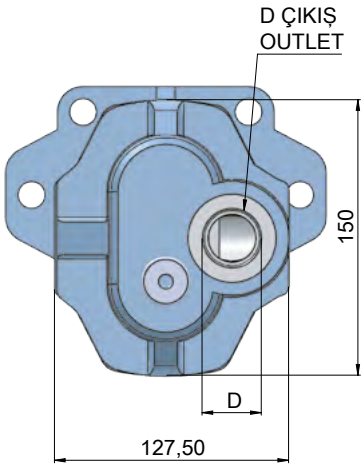


| CODE<br>KOD | ROTATION<br>YÖN | DISPLACEMENT<br>DEBİ (Lt/min) | A<br>(mm) | B<br>(mm) | INLET<br>GİRİŞ (C) | OUTLET<br>ÇIKIŞ (D) | Max. Continuous Pressure<br>Max. Sürekli Basınç(Pnom) | Max. Peak Pressure<br>Max. Pik Basınç (Pmax) |
|---|---|---|---|---|---|---|---|---|
| 33001772 | RIGHT/SAĞ | 17 | 171 | 126 | R1/2"-14 | R1/2"-14 | 265 | 300 |
| 33001773 | LEFT/SOL | | | | | | | |
| 33002772 | RIGHT/SAĞ | 27 | 178 | 130 | R3/4"-14 | R3/4"-14 | 260 | 290 |
| 33002773 | LEFT/SOL | | | | | | | |
| 33003472 | RIGHT/SAĞ | 34 | 183 | 132 | | | 250 | 280 |
| 33003473 | LEFT/SOL | | | | | | | |
| 33004372 | RIGHT/SAĞ | 43 | 190 | 135 | R1"-11 | | 240 | 270 |
| 33004373 | LEFT/SOL | | | | | | | |
| 33005172 | RIGHT/SAĞ | 51 | 193 | 137 | | R1"-11 | 220 | 250 |
| 33005173 | LEFT/SOL | | | | | | | |
| 33006172 | RIGHT/SAĞ | 61 | 201 | 138 | R1 1/4"-11 | | 210 | 240 |
| 33006173 | LEFT/SOL | | | | | | | |
| 33008272 | RIGHT/SAĞ | 82 | 315 | 147 | | | 180 | 220 |
| 33008273 | LEFT/SOL | | | | | | | |

# 30 T2 SERIES BI-ROTATIONAL

## 30 T2 SERİSİ ÇİFT DÖNÜŞLÜ

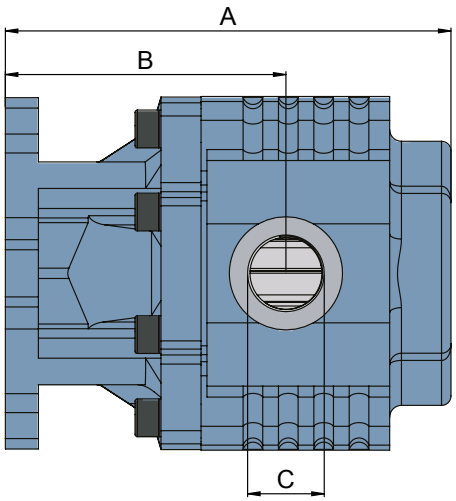




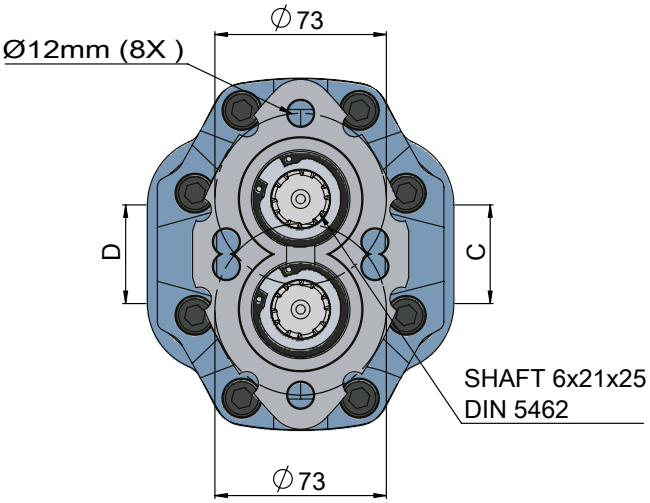


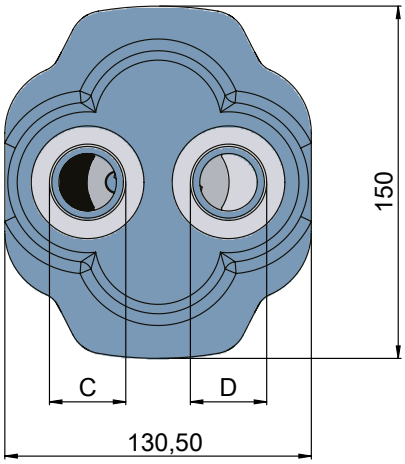


| CODE<br>KOD | ROTATION<br>YÖN | DISPLACEMENT<br>DEBİ (Lt/min) | A<br>(mm) | B<br>(mm) | INLET<br>GİRİŞ (C) | OUTLET<br>ÇIKIŞ (D) | Max. Continuous Pressure<br>Max. Sürekli Basınç(Pnom) | Max. Peak Pressure<br>Max. Pik Basınç (Pmax) |
|---|---|---|---|---|---|---|---|---|
| 33001723 | BI-ROTATIONAL-ÇİFT | 17 | 147,5 | 102,5 | R1/2"-14 | R1/2"-14 | 265 | 300 |
| 33002723 | BI-ROTATIONAL-ÇİFT | 27 | 154,5 | 106,5 | R3/4"-14 | R3/4"-14 | 260 | 290 |
| 33003423 | BI-ROTATIONAL-ÇİFT | 34 | 159,5 | 108,5 | | | 250 | 280 |
| 33004323 | BI-ROTATIONAL-ÇİFT | 43 | 166,5 | 111,5 | R1"-11 | | 240 | 270 |
| 33005123 | BI-ROTATIONAL-ÇİFT | 51 | 169,5 | 113,5 | | R1"-11 | 220 | 250 |
| 33006123 | BI-ROTATIONAL-ÇİFT | 61 | 177,5 | 114,5 | R1 1/4"-11 | | 210 | 240 |
| 33008241 | BI-ROTATIONAL-ÇİFT | 82 | 291,5 | 123,5 | | | 180 | 220 |

# 30 TANDEM SINGLE ROTATIONAL ISO

## 30 TANDEM TEK DÖNÜŞLÜ ISO



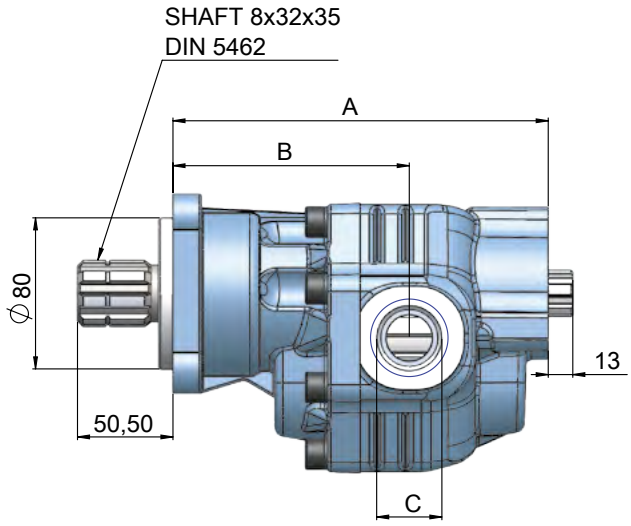


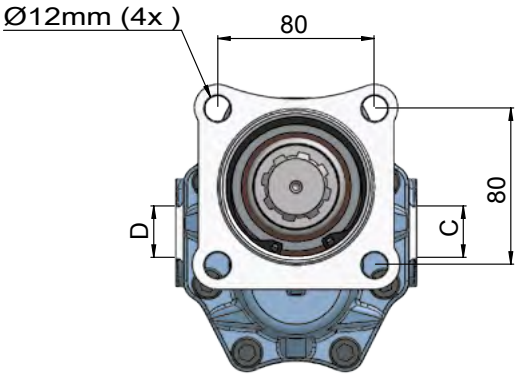


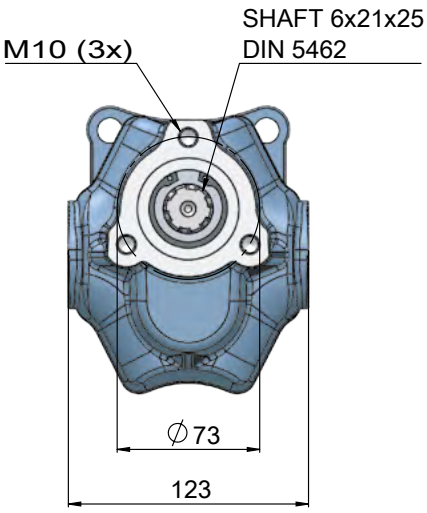


| CODE<br>KOD | ROTATION<br>YÖN | DISPLACEMENT<br>DEBİ (Lt/min) | A<br>(mm) | B<br>(mm) | INLET<br>GİRİŞ (C) | OUTLET<br>ÇIKIŞ (D) | Max. Continuous Pressure<br>Max. Sürekli Basınç(Pnom) | Max. Peak Pressure<br>Max. Pik Basınç (Pmax) |
|---|---|---|---|---|---|---|---|---|
| 33005131TAN | RIGHT/SAĞ | 51 | 201 | 137 | R1"-11 | R1"-11 | 220 | 250 |
| 33005132TAN | LEFT/SOL | | | | | | | |
| 33006131TAN | RIGHT/SAĞ | 61 | 208 | 138 | R1 1/4"-11 | | 210 | 240 |
| 33006132TAN | LEFT/SOL | | | | | | | |

# 35 BI-ROTATIONAL UNI

## 35 ÇİFT DÖNÜŞLÜ UNI

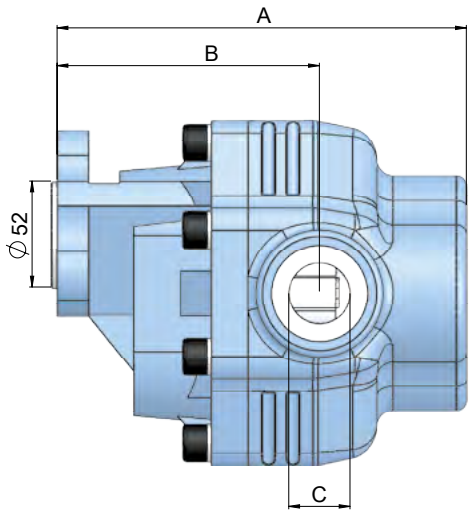




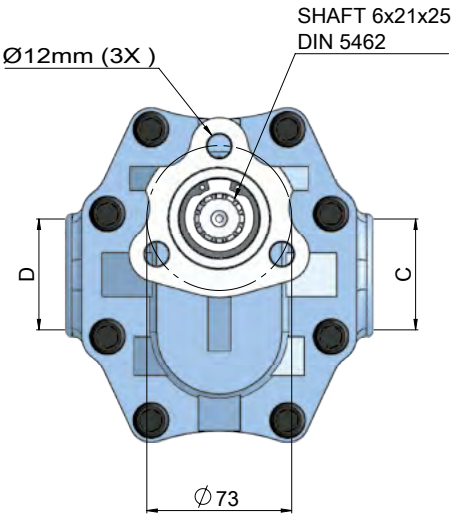


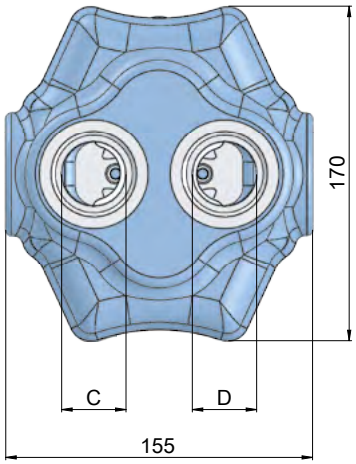


| CODE<br>KOD | ROTATION<br>YÖN | DISPLACEMENT<br>DEBİ (Lt/min) | A<br>(mm) | B<br>(mm) | INLET<br>GİRİŞ (C) | OUTLET<br>ÇIKIŞ (D) | Max. Continuous Pressure<br>Max. Sürekli Basınç(Pnom) | Max. Peak Pressure<br>Max. Pik Basınç (Pmax) |
|---|---|---|---|---|---|---|---|---|
| 33509041 | BI-ROTATIONAL-ÇİFT | 90 | 189 | 121 | R1 1/4"-11 | R1 1/4"-11 | 210 | 250 |
| 33511041 | BI-ROTATIONAL-ÇİFT | 110 | 197 | 129 | | | 200 | 240 |

# 35 SINGLE ROTATIONAL UNI

## 35 TEK DÖNÜŞLÜ UNI



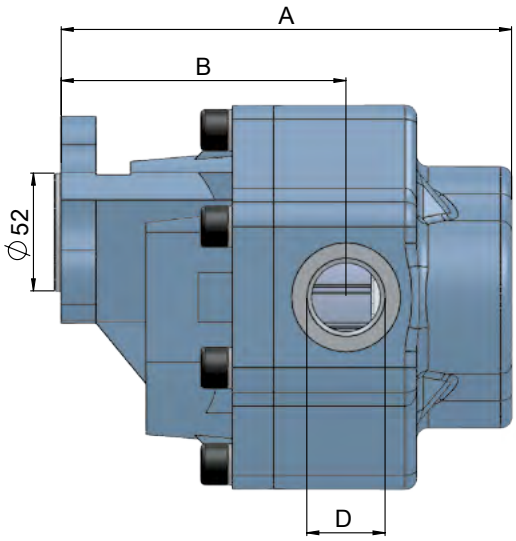


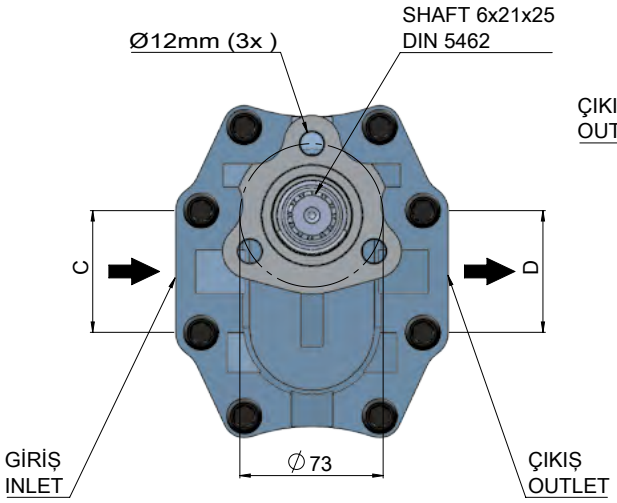


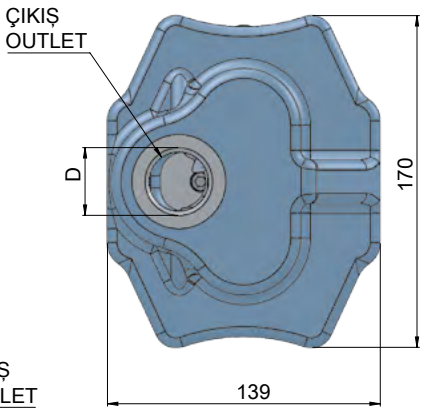


| CODE<br>KOD | ROTATION<br>YÖN | DISPLACEMENT<br>DEBİ (Lt/min) | A<br>(mm) | B<br>(mm) | INLET<br>GİRİŞ (C) | OUTLET<br>ÇIKIŞ (D) | Max. Continuous Pressure<br>Max. Sürekli Basınç(Pnom) | Max. Peak Pressure<br>Max. Pik Basınç (Pmax) |
|---|---|---|---|---|---|---|---|---|
| 33509011 | RIGHT/SAĞ | 90 | 191 | 118,5 | R1 1/4"-11 | R1"-1 | 220 | 250 |
| 33509012 | LEFT/SOL | | | | | | | |
| 33511011 | RIGHT/SAĞ | 110 | 199 | 126,5 | R1 1/4"-11 | R1"-1 | 210 | 240 |
| 33511012 | LEFT/SOL | | | | | | | |

# 35 BI-ROTATIONAL ISO

## 35 ÇİFT DÖNÜŞLÜ ISO

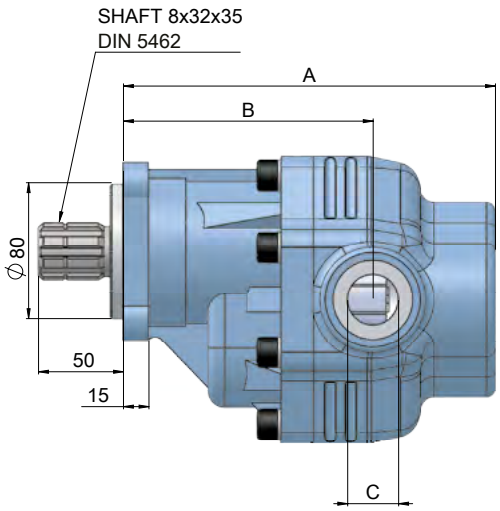




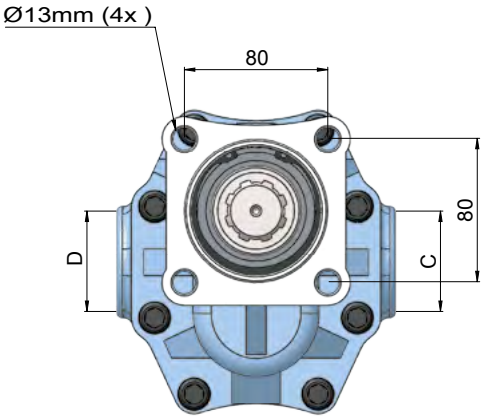


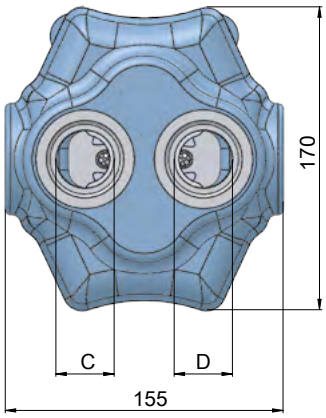


| CODE<br>KOD | ROTATION<br>YÖN | DISPLACEMENT<br>DEBİ (Lt/min) | A<br>(mm) | B<br>(mm) | INLET<br>GİRİŞ (C) | OUTLET<br>ÇIKIŞ (D) | Max. Continuous Pressure<br>Max. Sürekli Basınç(Pnom) | Max. Peak Pressure<br>Max. Pik Basınç (Pmax) |
|---|---|---|---|---|---|---|---|---|
| 33509051 | BI-ROTATIONAL-ÇİFT | 90 | 209 | 141 | R1 1/4"-11 | R1 1/4"-11 | 210 | 250 |
| 33511051 | BI-ROTATIONAL-ÇİFT | 110 | 217 | 149 | | | 200 | 240 |

# 35 SINGLE ROTATIONAL ISO

## 35 TEK DÖNÜŞLÜ ISO



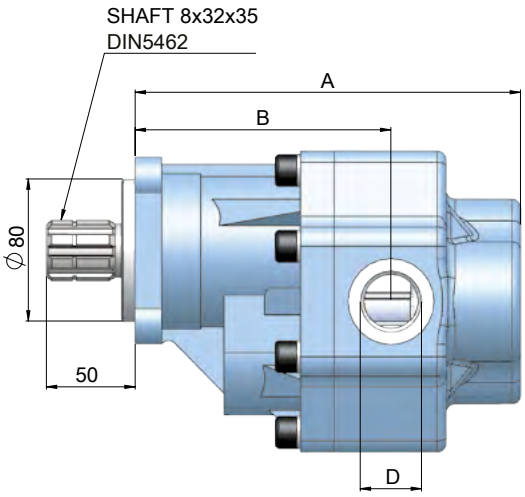


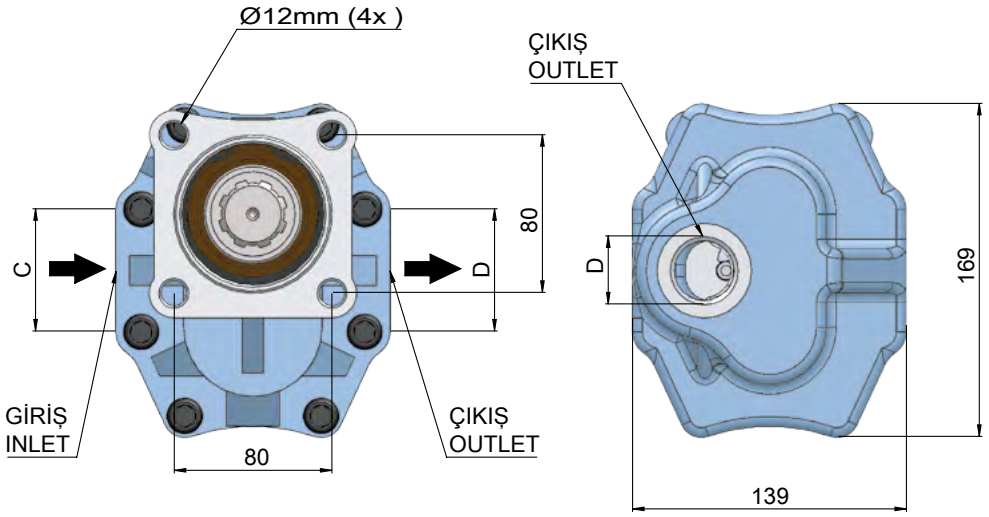


| CODE<br>KOD | ROTATION<br>YÖN | DISPLACEMENT<br>DEBİ (Lt/min) | A<br>(mm) | B<br>(mm) | INLET<br>GİRİŞ (C) | OUTLET<br>ÇIKIŞ (D) | Max. Continuous Pressure<br>Max. Sürekli Basınç(Pnom) | Max. Peak Pressure<br>Max. Pik Basınç (Pmax) |
|---|---|---|---|---|---|---|---|---|
| 33509031 | RIGHT/SAĞ | 90 | 211 | 138,5 | R1 1/4"-11 | R1"-1 | 220 | 250 |
| 33509032 | LEFT/SOL | | | | | | | |
| 33511031 | RIGHT/SAĞ | 110 | 219 | 146,5 | R1 1/4"-11 | R1"-1 | 210 | 240 |
| 33511032 | LEFT/SOL | | | | | | | |

# 35 PF SERIES BI-ROTATIONAL ISO

## 35 PF SERİSİ ÇİFT DÖNÜŞLÜ ISO

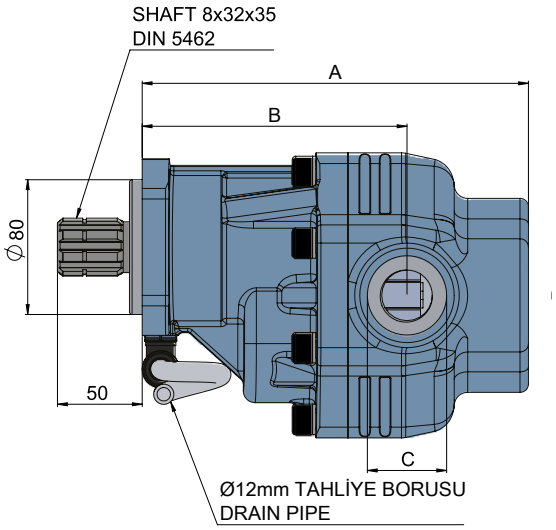




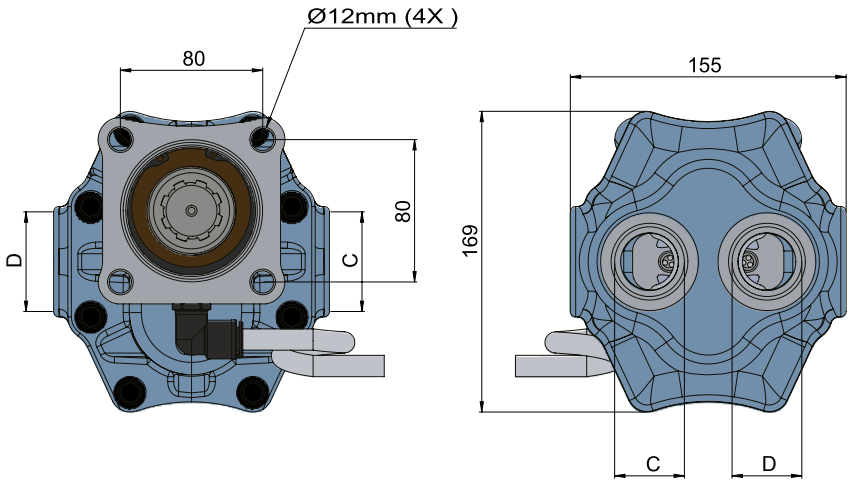


| CODE<br>KOD | ROTATION<br>YÖN | DISPLACEMENT<br>DEBİ (Lt/min) | A<br>(mm) | B<br>(mm) | INLET<br>GİRİŞ (C) | OUTLET<br>ÇIKIŞ (D) | Max. Continuous Pressure<br>Max. Sürekli Basınç(Pnom) | Max. Peak Pressure<br>Max. Pik Basınç (Pmax) |
|---|---|---|---|---|---|---|---|---|
| PF33509051 | BI-ROTATIONAL-ÇİFT | 90 | 223 | 155 | R1 1/4"-11 | R1 1/4"-11 | 210 | 250 |
| PF33511051 | BI-ROTATIONAL-ÇİFT | 110 | 231 | 163 | | | 200 | 240 |

# 35 PF SERIES SINGLE ROTATIONAL ISO

## 35 PF SERİSİ TEK DÖNÜŞLÜ ISO



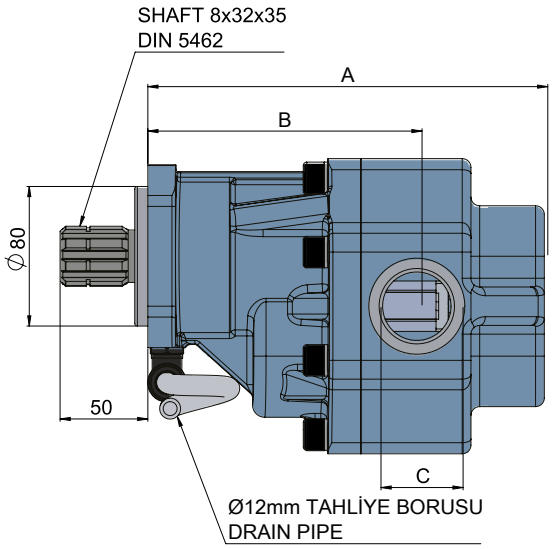


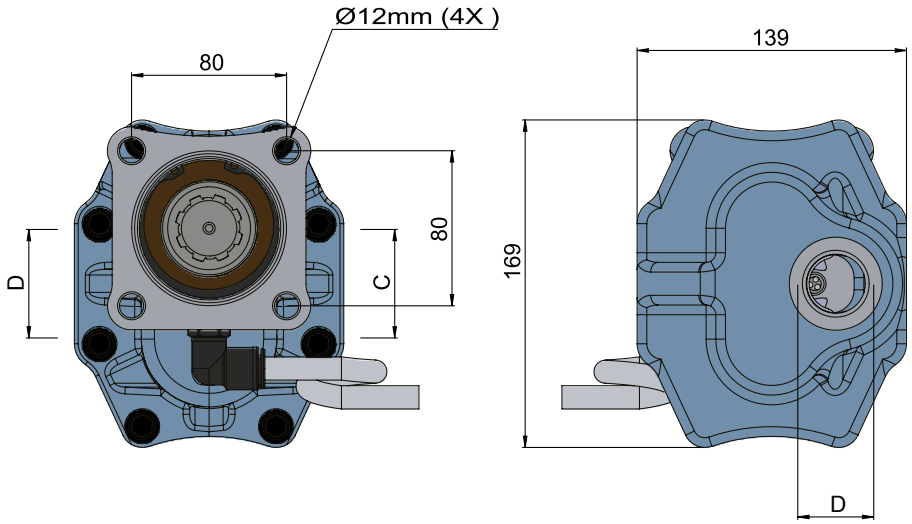


| CODE<br>KOD | ROTATION<br>YÖN | DISPLACEMENT<br>DEBİ (Lt/min) | A<br>(mm) | B<br>(mm) | INLET<br>GİRİŞ (C) | OUTLET<br>ÇIKIŞ (D) | Max. Continuous Pressure<br>Max. Sürekli Basınç(Pnom) | Max. Peak Pressure<br>Max. Pik Basınç (Pmax) |
|---|---|---|---|---|---|---|---|---|
| PF33509031 | RIGHT/SAĞ | 90 | 225 | 152,5 | R1 1/4"-11 | R1"-1 | 220 | 250 |
| PF33509032 | LEFT/SOL | | | | | | | |
| PF33511031 | RIGHT/SAĞ | 110 | 233 | 160,5 | R1 1/4"-11 | R1"-1 | 210 | 240 |
| PF33511032 | LEFT/SOL | | | | | | | |

# 40 BI-ROTATIONAL UNI

## 40 ÇİFT DÖNÜŞLÜ UNI

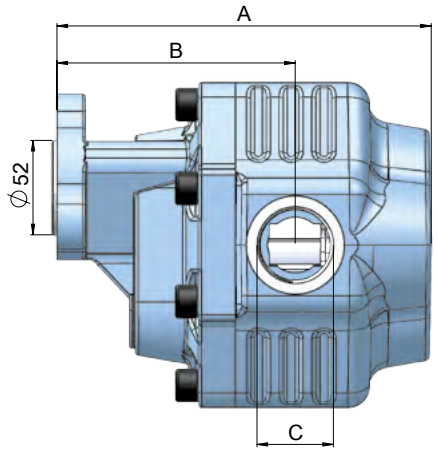




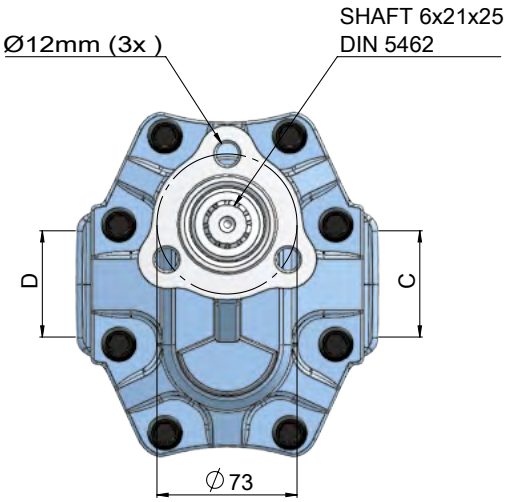


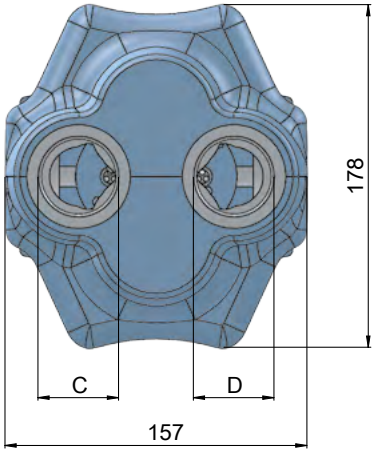


| CODE<br>KOD | ROTATION<br>YÖN | DISPLACEMENT<br>DEBİ (Lt/min) | A<br>(mm) | B<br>(mm) | INLET<br>GİRİŞ (C) | OUTLET<br>ÇIKIŞ (D) | Max. Continuous Pressure<br>Max. Sürekli Basınç(Pnom) | Max. Peak Pressure<br>Max. Pik Basınç (Pmax) |
|---|---|---|---|---|---|---|---|---|
| 34007341 | BI-ROTATIONAL-ÇİFT | 73 | 196 | 129 | R1"-11 | R1"-11 | 240 | 275 |
| 34008741 | BI-ROTATIONAL-ÇİFT | 87 | 201 | 133 | | | 220 | 250 |
| 34010941 | BI-ROTATIONAL-ÇİFT | 109 | 208 | 134 | R1 1/4"-11 | R1 1/4"-11 | 210 | 240 |

# 40 SINGLE ROTATIONAL UNI

## 40 TEK DÖNÜŞLÜ UNI



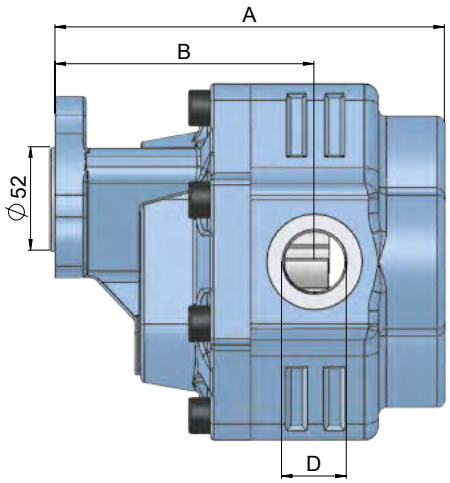


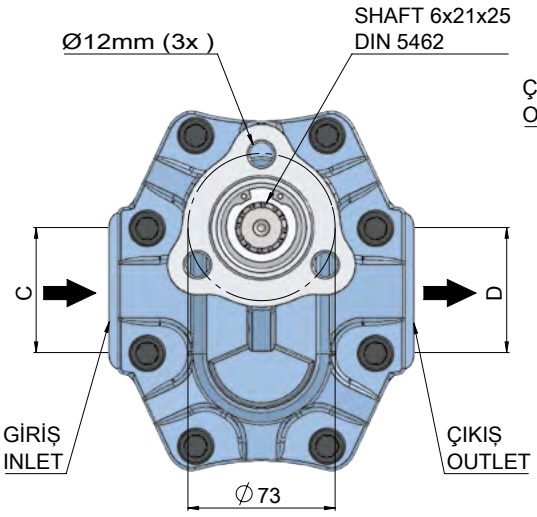


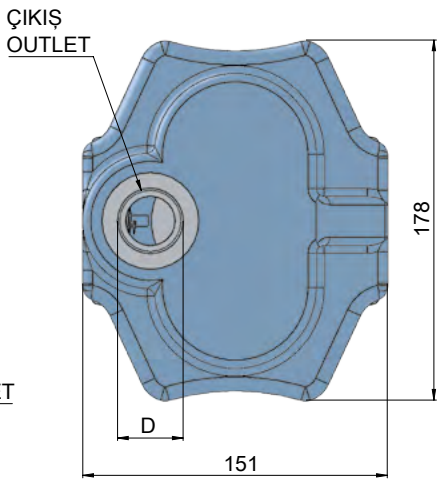


| CODE<br>KOD | ROTATION<br>YÖN | DISPLACEMENT<br>DEBİ (Lt/min) | A<br>(mm) | B<br>(mm) | INLET<br>GİRİŞ (C) | OUTLET<br>ÇIKIŞ (D) | Max. Continuous Pressure<br>Max. Sürekli Basınç(Pnom) | Max. Peak Pressure<br>Max. Pik Basınç (Pmax) |
|---|---|---|---|---|---|---|---|---|
| 34006311 | RIGHT/SAĞ | 63 | 191 | 128 | R1"-11 | R3/4"-14 | 250 | 285 |
| 34006312 | LEFT/SOL | | | | | | | |
| 34007311 | RIGHT/SAĞ | 73 | 196 | 131 | R1 1/4"-11 | | 240 | 275 |
| 34007312 | LEFT/SOL | | | | | | | |
| 34008711 | RIGHT/SAĞ | 87 | 199 | 133 | | R1"-11 | 220 | 250 |
| 34008712 | LEFT/SOL | | | | | | | |
| 34010911 | RIGHT/SAĞ | 109 | 207 | 134 | | | 210 | 240 |
| 34010912 | LEFT/SOL | | | | | | | |
| 34013311 | RIGHT/SAĞ | 133 | 222 | 134 | R1 1/2"-11 | | 200 | 230 |
| 34013312 | LEFT/SOL | | | | | | | |
| 34015111 | RIGHT/SAĞ | 151 | 230 | 137 | | | 170 | 210 |
| 34015112 | LEFT/SOL | | | | | | | |

# 40 BI-ROTATIONAL ISO

## 40 ÇİFT DÖNÜŞLÜ ISO

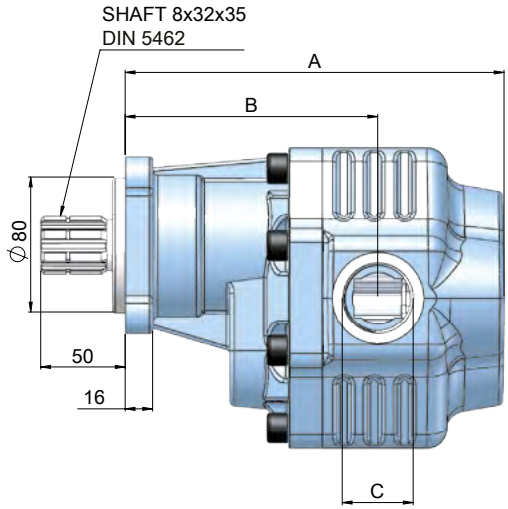




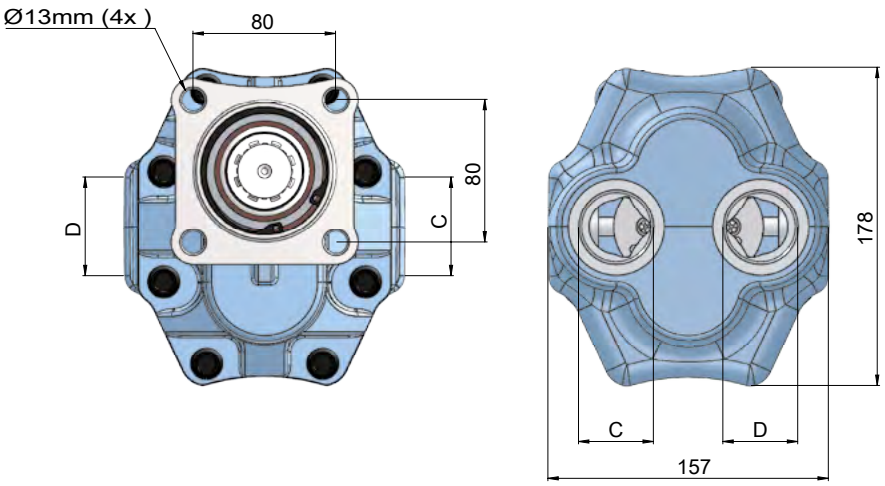


| CODE<br>KOD | ROTATION<br>YÖN | DISPLACEMENT<br>DEBİ (Lt/min) | A<br>(mm) | B<br>(mm) | INLET<br>GİRİŞ (C) | OUTLET<br>ÇIKIŞ (D) | Max. Continuous Pressure<br>Max. Sürekli Basınç(Pnom) | Max. Peak Pressure<br>Max. Pik Basınç (Pmax) |
|---|---|---|---|---|---|---|---|---|
| 34007351 | BI-ROTATIONAL-ÇİFT | 73 | 207 | 140 | R1"-11 | R1"-11 | 240 | 275 |
| 34008751 | BI-ROTATIONAL-ÇİFT | 87 | 212 | 144 | | | 220 | 250 |
| 34010951 | BI-ROTATIONAL-ÇİFT | 109 | 219 | 145 | R1 1/4"-11 | R1 1/4"-11 | 210 | 240 |

# 40 SINGLE ROTATIONAL ISO

## 40 TEK DÖNÜŞLÜ ISO



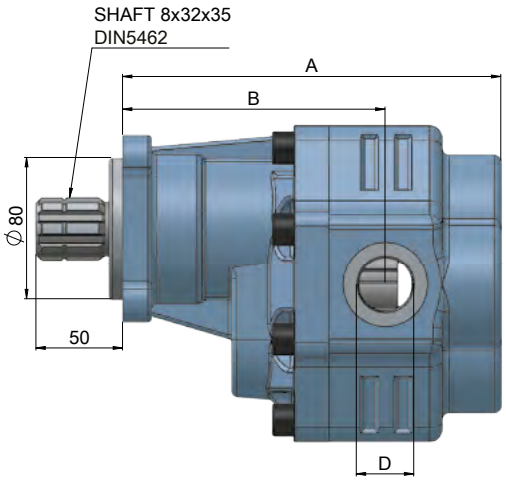


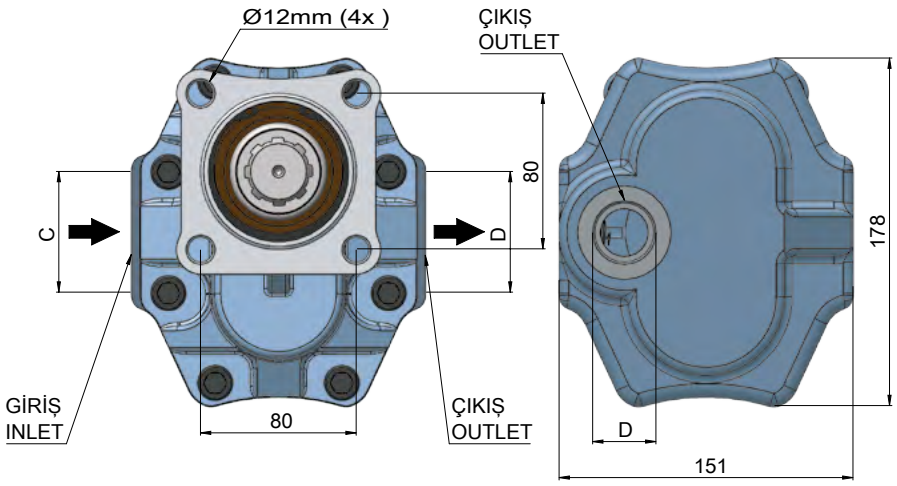


| CODE<br>KOD | ROTATION<br>YÖN | DISPLACEMENT<br>DEBİ (Lt/min) | A<br>(mm) | B<br>(mm) | INLET<br>GİRİŞ (C) | OUTLET<br>ÇIKIŞ (D) | Max. Continuous Pressure<br>Max. Sürekli Basınç(Pnom) | Max. Peak Pressure<br>Max. Pik Basınç (Pmax) |
|---|---|---|---|---|---|---|---|---|
| 34006311 | RIGHT/SAĞ | 63 | 202 | 139 | R1"-11 | R3/4"-14 | 250 | 285 |
| 34006312 | LEFT/SOL | | | | | | | |
| 34007311 | RIGHT/SAĞ | 73 | 207 | 142 | R1 1/4"-11 | | 240 | 275 |
| 34007312 | LEFT/SOL | | | | | | | |
| 34008711 | RIGHT/SAĞ | 87 | 210 | 144 | | R1"-11 | 220 | 250 |
| 34008712 | LEFT/SOL | | | | | | | |
| 34010911 | RIGHT/SAĞ | 109 | 218 | 145 | | | 210 | 240 |
| 34010912 | LEFT/SOL | | | | | | | |
| 34013311 | RIGHT/SAĞ | 133 | 233 | 145 | R1 1/2"-11 | | 200 | 230 |
| 34013312 | LEFT/SOL | | | | | | | |
| 34015111 | RIGHT/SAĞ | 151 | 241 | 148 | | | 170 | 210 |
| 34015112 | LEFT/SOL | | | | | | | |

# 40 DPM MECHANIC VALVES BI-ROTATIONAL

## 40 DPM MEKANİK VENTİLLİ ÇİFT DÖNÜŞLÜ

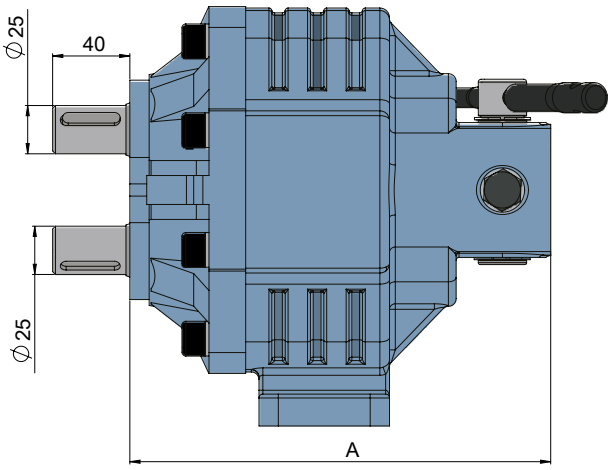




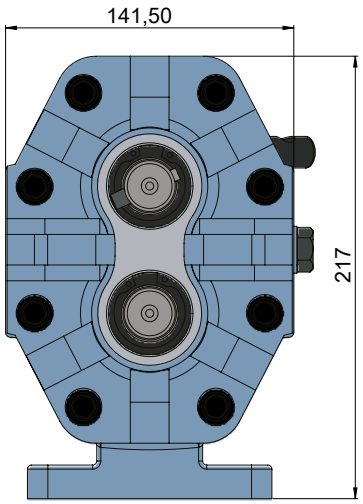


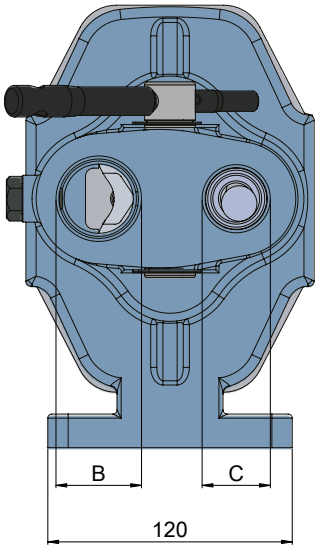


| CODE<br>KOD | ROTATION<br>YÖN | DISPLACEMENT<br>DEBİ (Lt/min) | A<br>(mm) | INLET<br>GİRİŞ (B) | OUTLET<br>ÇIKIŞ (C) | Max. Continuous Pressure<br>Max. Sürekli Basınç(Pnom) | Max. Peak Pressure<br>Max. Pik Basınç (Pmax) |
|---|---|---|---|---|---|---|---|
| 34004371 | BI-ROTATIONAL-ÇİFT | 109 | 218 | R1 1/4"-11 | R1"-11 | 210 | 240 |

# 40 PF SERIES BI-ROTATIONAL ISO

## 40 PF SERİSİ ÇİFT DÖNÜŞLÜ ISO



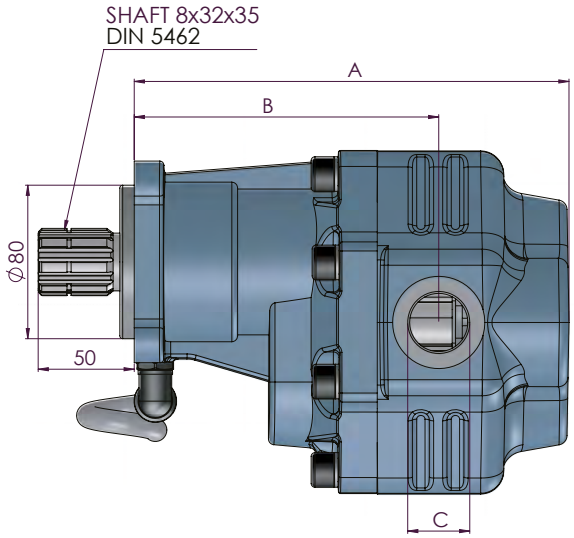


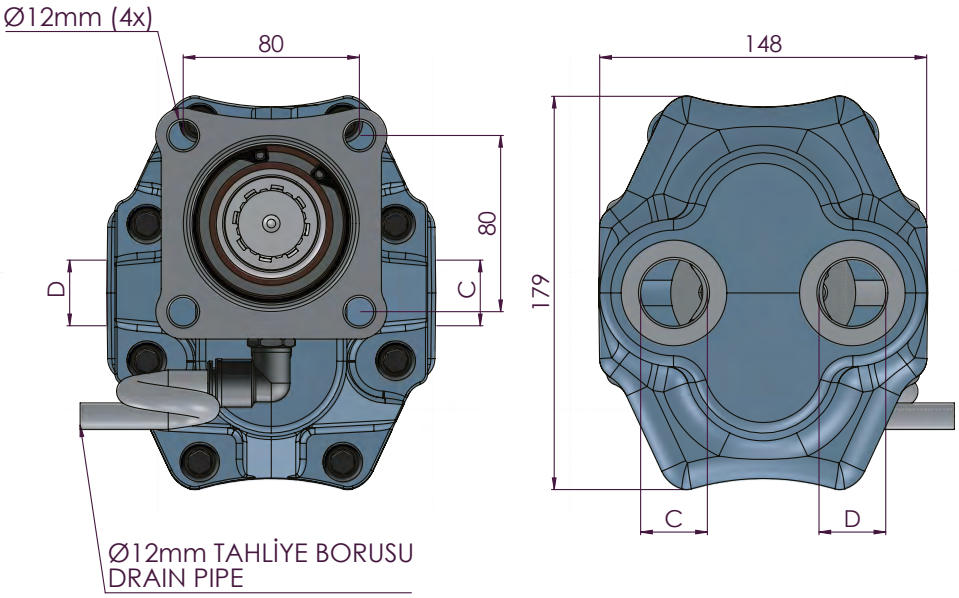


| CODE<br>KOD | ROTATION<br>YÖN | DISPLACEMENT<br>DEBİ (Lt/min) | A<br>(mm) | B<br>(mm) | INLET<br>GİRİŞ (C) | OUTLET<br>ÇIKIŞ (D) | Max. Continuous Pressure<br>Max. Sürekli Basınç(Pnom) | Max. Peak Pressure<br>Max. Pik Basınç (Pmax) |
|---|---|---|---|---|---|---|---|---|
| PF34007351 | BI-ROTATIONAL-ÇİFT | 73 | 221 | 154 | R1"-11 | R1"-11 | 240 | 275 |
| PF34008751 | BI-ROTATIONAL-ÇİFT | 87 | 226 | 158 | | | 220 | 250 |
| PF34010951 | BI-ROTATIONAL-ÇİFT | 109 | 233 | 159 | R1 1/4"-11 | R1 1/4"-11 | 210 | 240 |

# 40 PF SERIES SINGLE ROTATIONAL ISO

## 40 PF SERİSİ TEK DÖNÜŞLÜ ISO

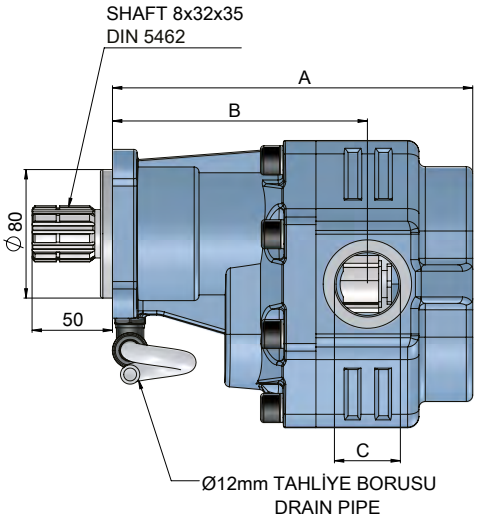




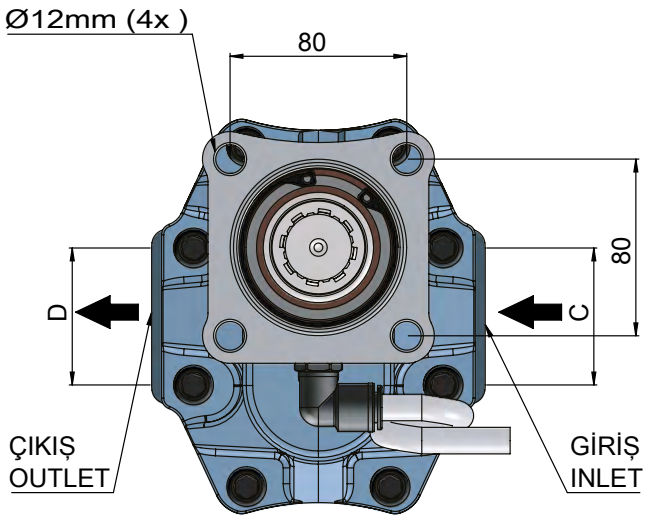


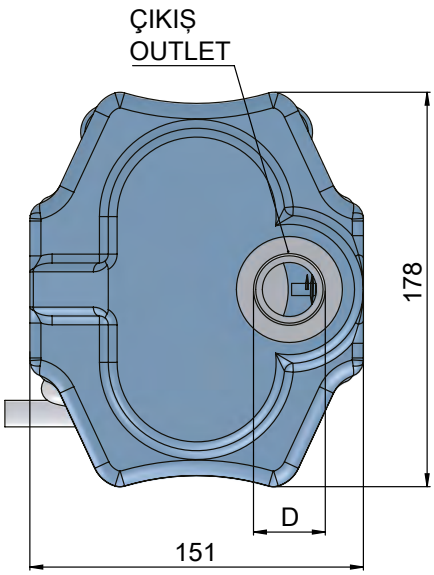


| CODE<br>KOD | ROTATION<br>YÖN | DISPLACEMENT<br>DEBİ (Lt/min) | A<br>(mm) | B<br>(mm) | INLET<br>GİRİŞ (C) | OUTLET<br>ÇIKIŞ (D) | Max. Continuous Pressure<br>Max. Sürekli Basınç(Pnom) | Max. Peak Pressure<br>Max. Pik Basınç (Pmax) |
|---|---|---|---|---|---|---|---|---|
| PF34006331 | RIGHT/SAĞ | 63 | 216 | 153 | R1"-11 | R3/4"-14 | 250 | 285 |
| PF34006332 | LEFT/SOL | | | | | | | |
| PF34007331 | RIGHT/SAĞ | 73 | 221 | 156 | | | 240 | 275 |
| PF34007332 | LEFT/SOL | | | | | | | |
| PF34008731 | RIGHT/SAĞ | 87 | 224 | 158 | R1 1/4"-11 | R1"-11 | 220 | 250 |
| PF34008732 | LEFT/SOL | | | | | | | |
| PF34010931 | RIGHT/SAĞ | 109 | 232 | 159 | | | 210 | 240 |
| PF34010932 | LEFT/SOL | | | | | | | |
| PF34013331 | RIGHT/SAĞ | 133 | 247 | 159 | R1 1/2"-11 | | 200 | 230 |
| PF34013332 | LEFT/SOL | | | | | | | |
| PF34015131 | RIGHT/SAĞ | 151 | 255 | 162 | | | 170 | 210 |
| PF34015132 | LEFT/SOL | | | | | | | |

# 6 PISTON PUMP ISO

## 6 PİSTONLU POMPA ISO



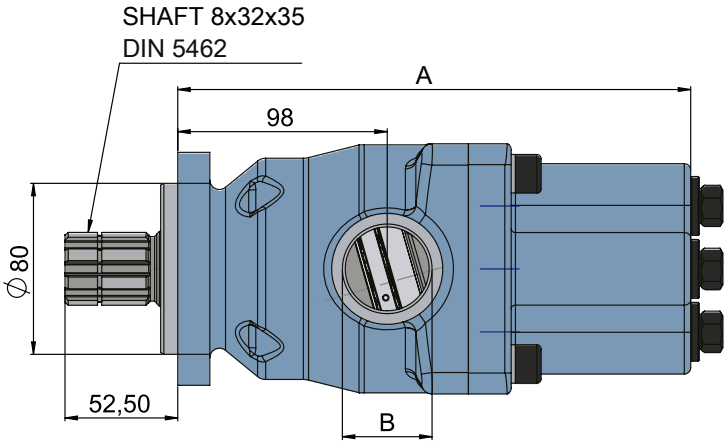


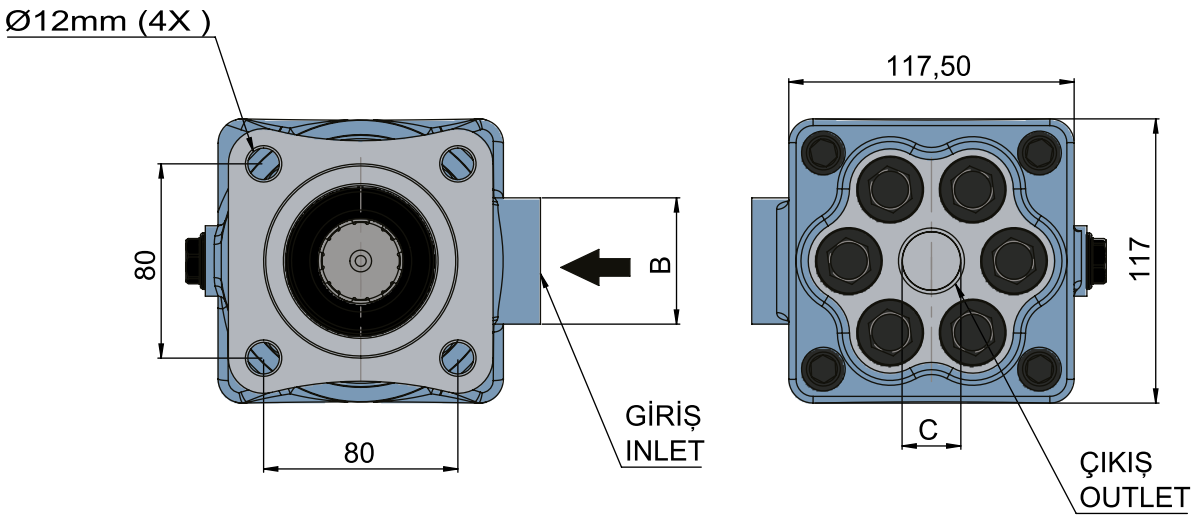


| CODE<br>KOD | DISPLACEMENT<br>DEBİ (Lt/min) | A<br>(mm) | INLET<br>GİRİŞ (B) | OUTLET<br>ÇIKIŞ (C) | Max. Continuous Pressure<br>Max. Sürekli Basınç(Pnom) | Max. Peak Pressure<br>Max. Pik Basınç (Pmax) |
|---|---|---|---|---|---|---|
| 36105513 | 55 | 240 | R1 1/4"-11 | R3/4"-14 | 320 | 480 |

# 6 PISTON PUMP REAR OUTLET ISO

## 6 PİSTONLU POMPA ARKADAN ÇIKIŞ

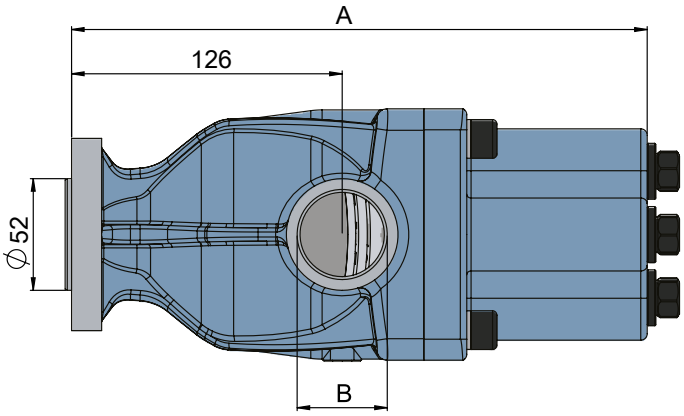




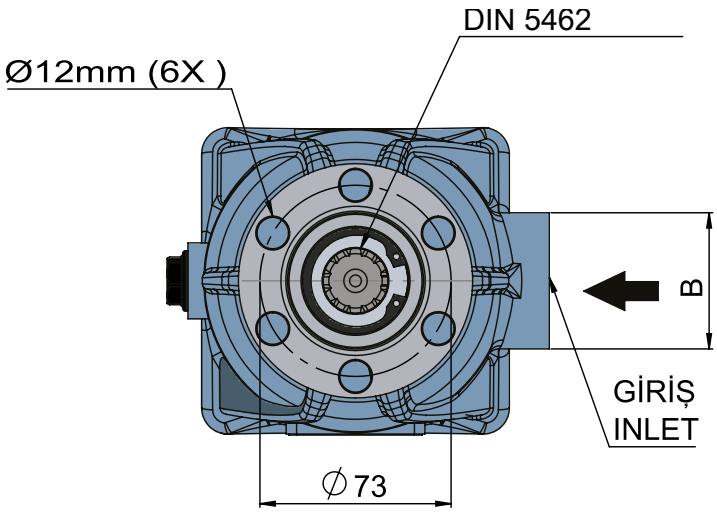


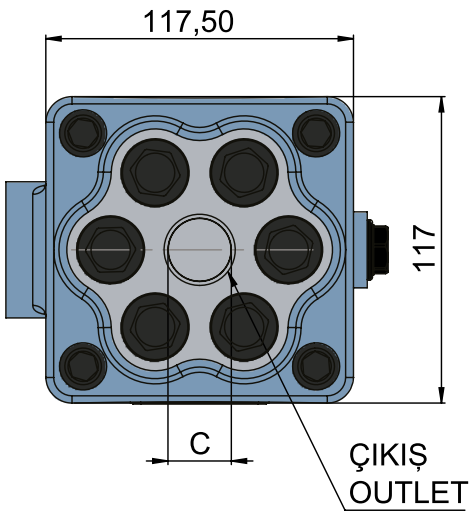


| CODE<br>KOD | DISPLACEMENT<br>DEBİ (Lt/min) | A<br>(mm) | INLET<br>GİRİŞ (B) | OUTLET<br>ÇIKIŞ (C) | Max. Continuous Pressure<br>Max. Sürekli Basınç(Pnom) | Max. Peak Pressure<br>Max. Pik Basınç (Pmax) |
|---|---|---|---|---|---|---|
| 36105513 | 55 | 268 | R1 1/4"-11 | R3/4"-14 | 320 | 300 |

# 6 PISTON HIGH PRESSURE PUMP ISO

## 6 PİSTONLU YÜKSEK BASINÇ POMPASI ISO



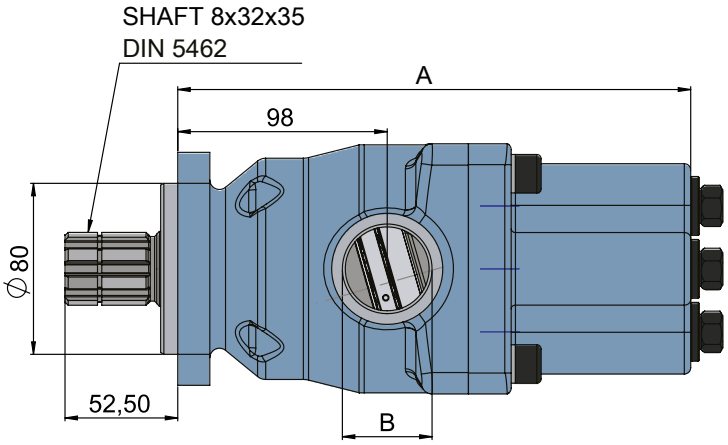


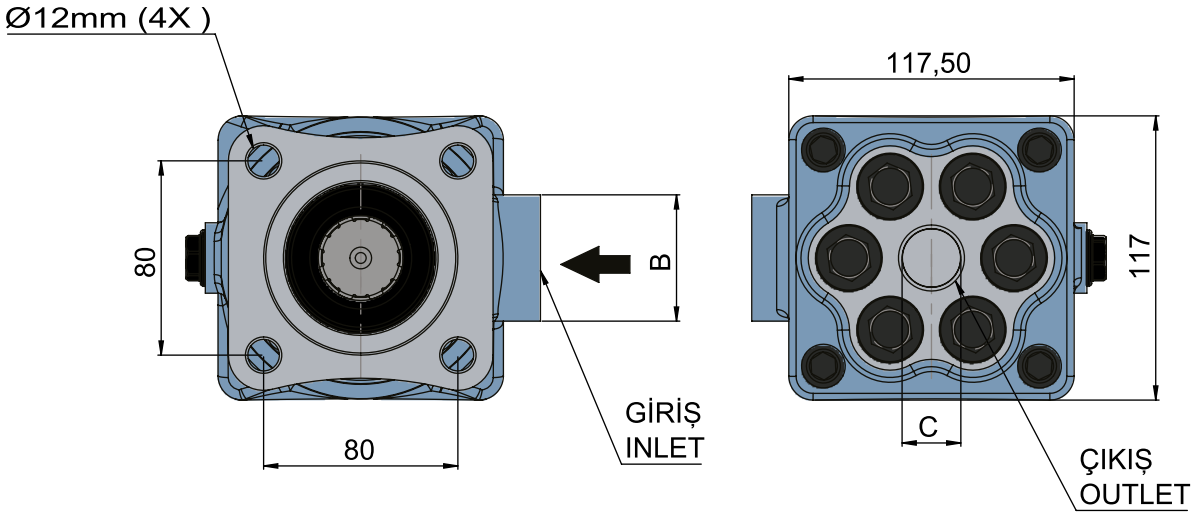


| CODE<br>KOD | DISPLACEMENT<br>DEBİ (Lt/min) | A<br>(mm) | INLET<br>GİRİŞ (B) | OUTLET<br>ÇIKIŞ (C) | Max. Continuous Pressure<br>Max. Sürekli Basınç(Pnom) | Max. Peak Pressure<br>Max. Pik Basınç (Pmax) |
|---|---|---|---|---|---|---|
| 36105513 | 45 | 240 | R1 1/4"-11 | R3/4"-14 | 320 | 480 |

# 6 PISTON HIGH PRESSURE PUMP UNI

## 6 PİSTONLU YÜKSEK BASINÇ POMPASI UNI

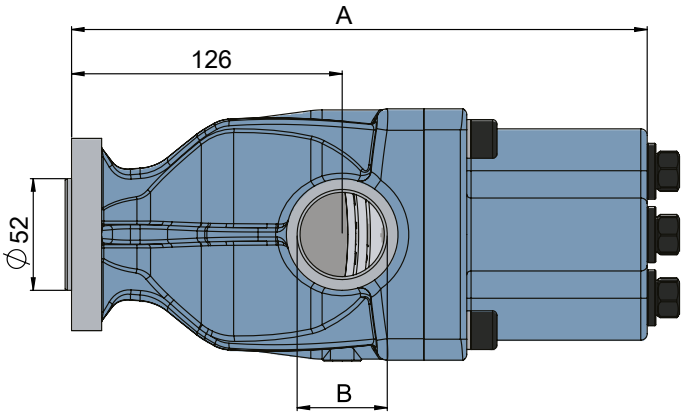




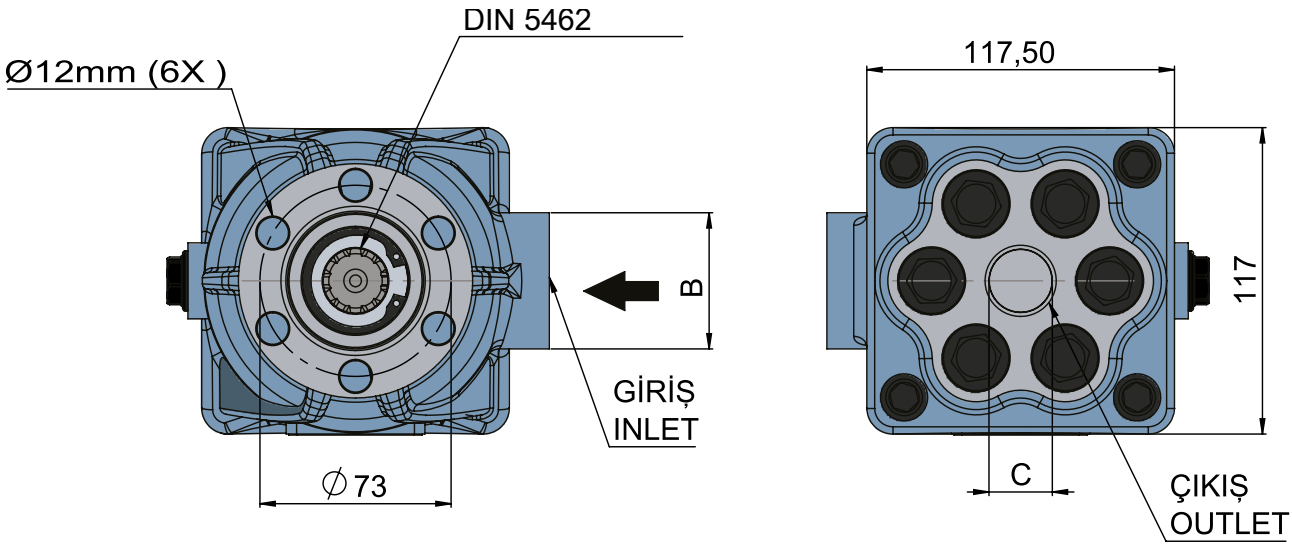


| CODE<br>KOD | DISPLACEMENT<br>DEBİ (Lt/min) | A<br>(mm) | INLET<br>GİRİŞ (B) | OUTLET<br>ÇIKIŞ (C) | Max. Continuous Pressure<br>Max. Sürekli Basınç(Pnom) | Max. Peak Pressure<br>Max. Pik Basınç (Pmax) |
|---|---|---|---|---|---|---|
| 36105513 | 45 | 268 | R1 1/4"-11 | R3/4"-14 | 320 | 300 |

# 9 PISTON PUMP ISO

## 9 PİSTONLU POMPA ISO



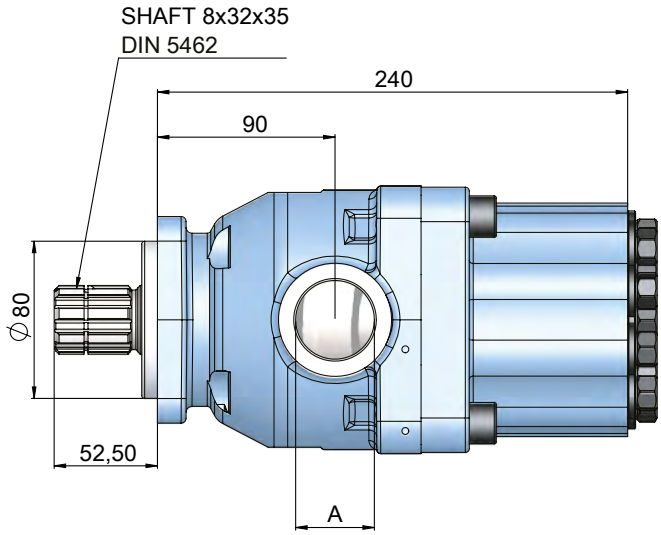


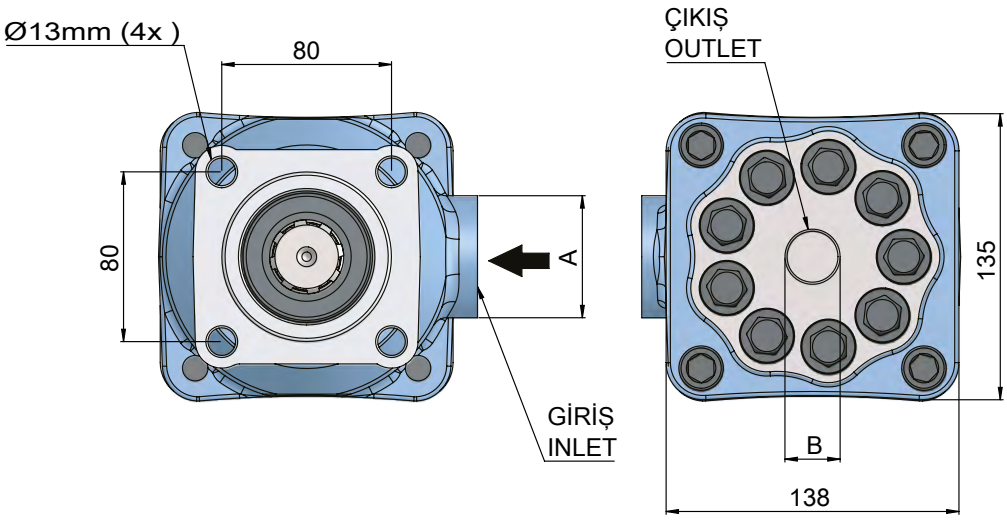


| CODE<br>KOD | DISPLACEMENT<br>DEBİ (Lt/min) | A<br>(mm) | INLET<br>GİRİŞ (B) | OUTLET<br>ÇIKIŞ (C) | Max. Continuous Pressure<br>Max. Sürekli Basınç(Pnom) | Max. Peak Pressure<br>Max. Pik Basınç (Pmax) |
|---|---|---|---|---|---|---|
| 35006023 | 60 | 238 | R1 1/4"-11 | R3/4"-14 | 250 | 300 |
| 35008023 | 80 | 238 | | | 250 | 300 |

# 10 PISTON PUMP ISO

## 10 PİSTONLU POMPA ISO

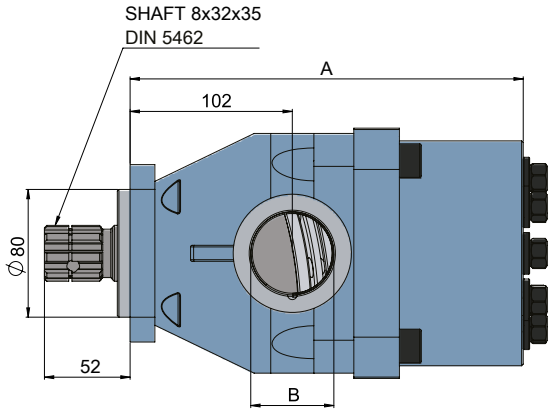




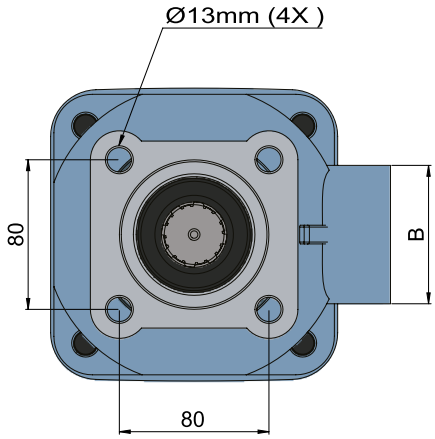


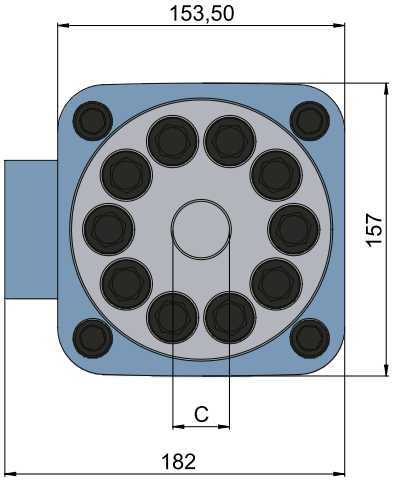


| CODE<br>KOD | DISPLACEMENT<br>DEBİ (Lt/min) | A<br>(mm) | INLET<br>GİRİŞ (B) | OUTLET<br>ÇIKIŞ (C) | Max. Continuous Pressure<br>Max. Sürekli Basınç(Pnom) | Max. Peak Pressure<br>Max. Pik Basınç (Pmax) |
|---|---|---|---|---|---|---|
| 35508523 | 85 | 246 | Ø52mm | R1"-11 | 300 | 450 |
| 35510023 | 100 | 246 | | | 310 | 460 |

# BENT AXIS PUMP P SERIES

## EKSENEL POMPA P SERİSİ



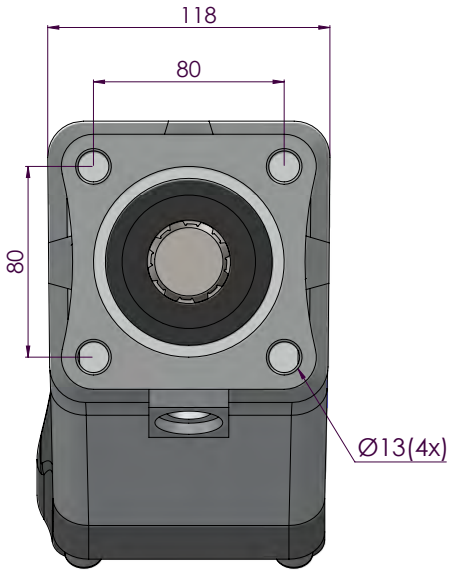


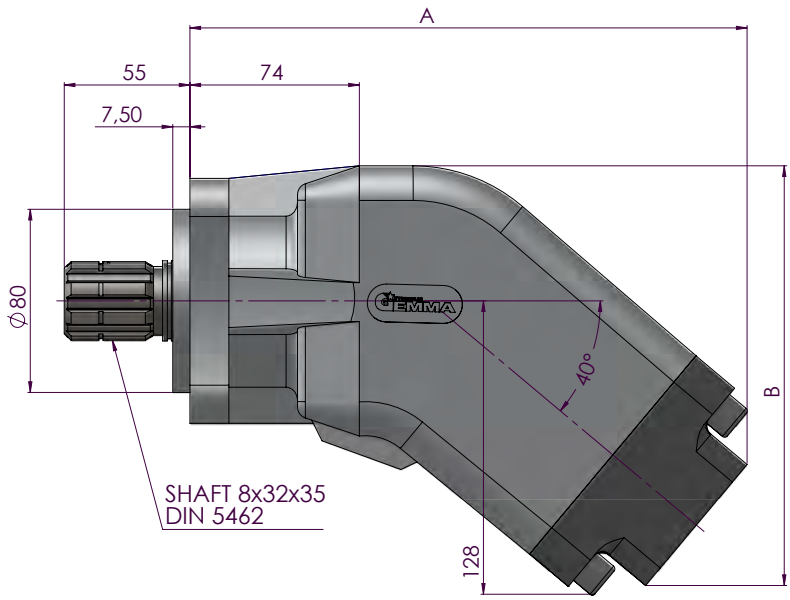


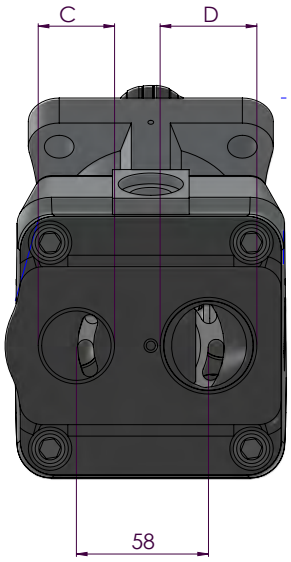


| CODE<br>KOD | ROTATION<br>YÖN | DISPLACEMENT<br>DEBİ (Lt/min) | A<br>(mm) | B<br>(mm) | INLET<br>GİRİŞ (C) | OUTLET<br>ÇIKIŞ (D) | Max. Continuous Pressure<br>Max. Sürekli Basınç(Pnom) | Max. Peak Pressure<br>Max. Pik Basınç (Pmax) |
|---|---|---|---|---|---|---|---|---|
| 35503531 | RIGHT/SAĞ | 35 | 243 | 183 | R 3/4'' | R 1/4'' | 400 | 450 |
| 35503532 | LEFT/SOL | | | | | | | |
| 35504531 | RIGHT/SAĞ | 45 | 243 | 183 | | | 400 | 450 |
| 35504532 | LEFT/SOL | | | | | | | |
| 35505531 | RIGHT/SAĞ | 55 | 243 | 183 | | | 400 | 450 |
| 35505532 | LEFT/SOL | | | | | | | |
| 35506531 | RIGHT/SAĞ | 65 | 243 | 183 | | | 400 | 450 |
| 35506532 | LEFT/SOL | | | | | | | |
| 35508531 | RIGHT/SAĞ | 85 | 243 | 183 | R 1'' | R 1/2'' | 375 | 430 |
| 35508532 | LEFT/SOL | | | | | | | |
| 35510531 | RIGHT/SAĞ | 105 | 243 | 183 | | | 350 | 400 |
| 35510532 | LEFT/SOL | | | | | | | |

# BENT AXIS PUMP S SERIES

## EKSENEL POMPA S SERİSİ

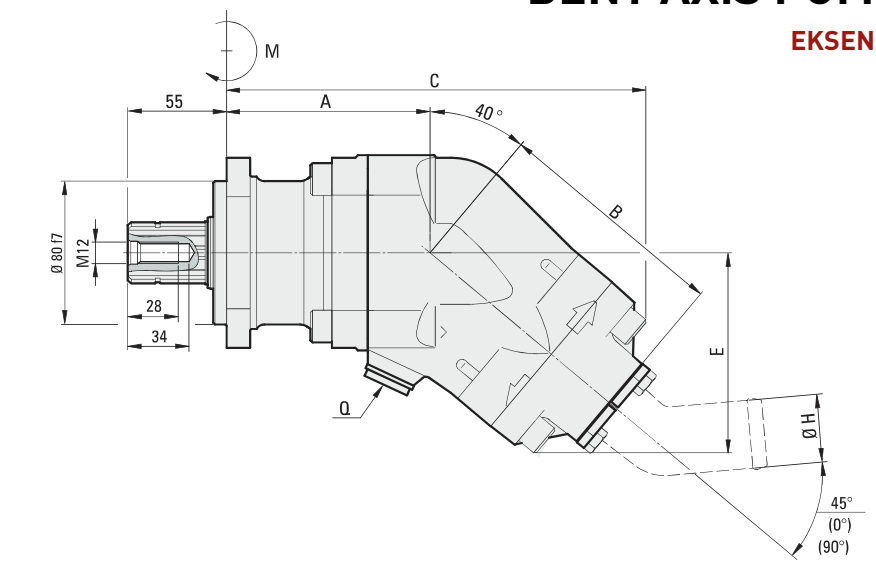


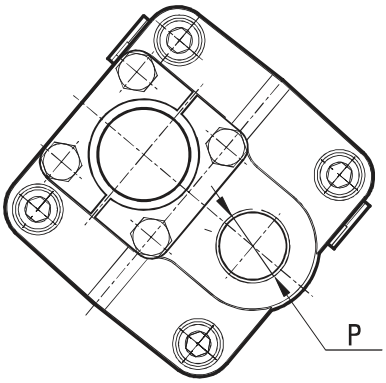


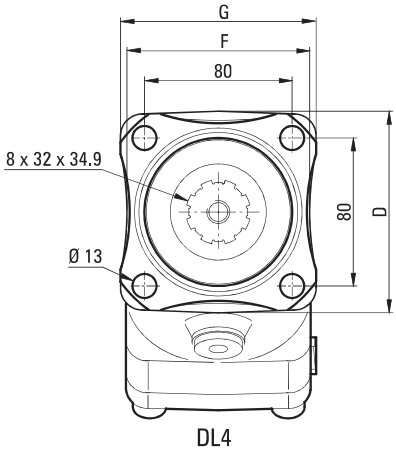


DL4

| POMPA KODU PUMP CODES | ROTATION YÖN | DISPLACEMENT (cm³/rev) | A (mm) | B (mm) | C (mm) | B (mm) | E (mm) | F (mm) | G (mm) | H (mm) | P (ISO G) | Q (ISO G) | Max. Working Pressure(bar) | Max. Pump Speed Continuous Limited (rpm) |
|---|---|---|---|---|---|---|---|---|---|---|---|---|---|---|
| 35201231 | RIGHT/SAĞ | 12.6 | 97 | 112 | 202 | 99 | 97 | 89 | 97 | 38-50 | 3/4 | 1/2 | 400 | 2300-3000 |
| 35201232 | LEFT/SOL | | | | | | | | | | | | | |
| 35201731 | RIGHT/SAĞ | 17.0 | 97 | 112 | 202 | 99 | 97 | 89 | 97 | 38-50 | 3/4 | 1/2 | 400 | 2300-3000 |
| 35201732 | LEFT/SOL | | | | | | | | | | | | | |
| 35202531 | RIGHT/SAĞ | 25.4 | 97 | 112 | 202 | 99 | 97 | 89 | 97 | 38-50 | 3/4 | 1/2 | 400 | 2300-3000 |
| 35202532 | LEFT/SOL | | | | | | | | | | | | | |
| 35203431 | RIGHT/SAĞ | 34.2 | 97 | 112 | 202 | 99 | 97 | 89 | 97 | 38-50 | 3/4 | 1/2 | 400 | 2300-3000 |
| 35203432 | LEFT/SOL | | | | | | | | | | | | | |
| 35204031 | RIGHT/SAĞ | 41.2 | 113 | 130 | 228 | 109 | 109 | 99 | 106 | 38-50 | 3/4 | 1/2 | 400 | 1900-2500 |
| 35204032 | LEFT/SOL | | | | | | | | | | | | | |
| 35204531 | RIGHT/SAĞ | 47.1 | 113 | 130 | 228 | 109 | 109 | 99 | 106 | 38-50 | 3/4 | 1/2 | 400 | 1900-2500 |
| 35204532 | LEFT/SOL | | | | | | | | | | | | | |
| 35205631 | RIGHT/SAĞ | 56.0 | 113 | 130 | 228 | 109 | 109 | 99 | 106 | 38-50 | 3/4 | 1/2 | 400 | 1900-2500 |
| 35205632 | LEFT/SOL | | | | | | | | | | | | | |
| 35206531 | RIGHT/SAĞ | 63.6 | 113 | 130 | 228 | 109 | 109 | 99 | 106 | 38-50 | 3/4 | 1/2 | 400 | 1900-2500 |
| 35206532 | LEFT/SOL | | | | | | | | | | | | | |
| 35208531 | RIGHT/SAĞ | 83.6 | 123 | 147 | 259 | 126 | 126 | 115 | 123 | 50-64 | 1 | 1/2 | 400 | 1500-2000 |
| 35208532 | LEFT/SOL | | | | | | | | | | | | | |
| 35210831 | RIGHT/SAĞ | 108.0 | 123 | 147 | 259 | 126 | 126 | 115 | 123 | 50-64 | 1 | 1/2 | 400 | 1500-2000 |
| 35210832 | LEFT/SOL | | | | | | | | | | | | | |

# POWER TAKE-OFFS
GÜÇ AKTARMA KUTULARI


| | |
|---|---|
| 50 | CODING SYSTEM<br>KODLAMA SİSTEMİ |
| 51 | GENERAL INFORMATION<br>GENEL BİLGİLER |
| 52 | MERCEDES |
| 70 | ZF |
| 88 | SCANIA |
| 100 | FULLER |
| 105 | EATON |
| 117 | ISUZU |
| 132 | MITSHUBISHI |
| 141 | FOTON ATLAS |
| 143 | LIAZ |
| 145 | IVECO |
| 154 | KAMAZ |
| 155 | JAC |
| 156 | VOLVO |
| 167 | RENAULT |
| 168 | HYUNDAI |
| 174 | MACK |
| 175 | TURNER |
| 179 | NISSAN |



| 5 | XX | XX | X | X | X | X | X |
|---|---|---|---|---|---|---|---|
| **PRODUCT TYPE** ÜRÜN TİPİ | **TRANSMISSION TYPE** ŞANZIMAN TİPİ | **PTO MODEL** PTO MODELİ | **CONNECTION TYPE** BAĞLANTI ŞEKLİ | | | | |

| | |
|---|---|
| P.T.O | |
| Power Take-Offs | |

| | |
|---|---|
| 01 | Mercedes |
| 02 | Zf |
| 03 | Scania |
| 04 | Eaton-Hema |
| 05 | Fuller |
| 06 | Isuzu |
| 07 | Mitsubishi |
| 08 | Iveco |
| 09 | Volvo |
| 10 | Turner |
| 11 | Mack |
| 12 | Hyundai |
| 13 | Liaz |
| 14 | Fatih |
| 15 | Fiat |
| 16 | Daihatsu |
| 17 | Nissan |
| 18 | Renault |
| 19 | Foton Atlas |
| 20 | Kamaz |
| 21 | Jac |
| 22 | Maz |

| | |
|---|---|
| DETERMINED BY OUR COMPANY | |
| FİRMAMIZ BELİRLER | |

| | |
|---|---|
| 2 | Bottom / Alttan |
| 3 | Rear / Kuyruk |
| 4 | Rear and Side / Kuyruk ve Yan |
| 5 | Side / Yan |

| | |
|---|---|
| 1 | UNI |
| 2 | ISO |
| 3 | Flange / Flanşlı |
| 4 | Shaft / Şaftlı |

| | |
|---|---|
| 1 | Anticlockwise (ACW) / Sol |
| 2 | Clockwise (CW) / Sağ |

| | |
|---|---|
| M | Mechanic / Mekanik |
| P | Pneumatic / Pnömatik |
| V | Vacuum / Vakumlu |

| | |
|---|---|
| 0 | Without Switch / Müşürsüz |
| 1 | With Switch / Müşürlü |

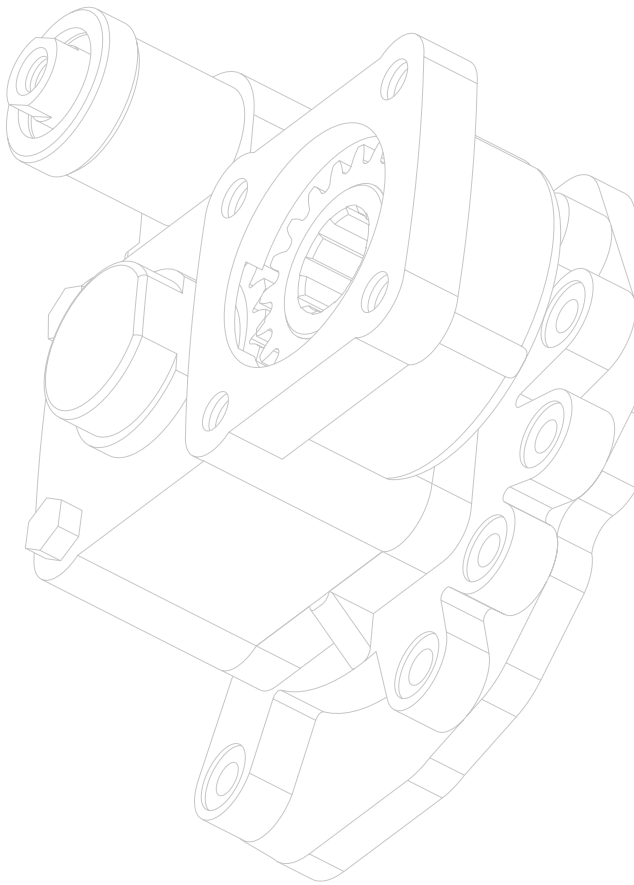

## CLASSIFICATION OF PTOS

PTOs can be side, left, or bottom mounted to the gearbox.
Rear-mounted PTOs are divided into two types: single-gear and double-gear
PTOs are divided into three groups according to their operating system: pneumatic, mechanical or vacuum.
PTOs are divided into three groups according to their operating system: pneumatic, mechanical or vacuum.

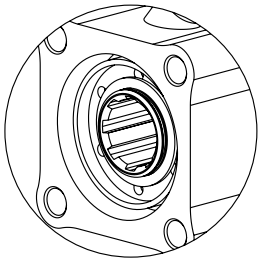

ISO

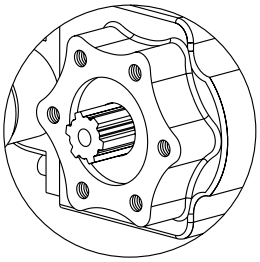

UNI

## PTO'LARIN SINIFLANDIRILMASI

PTO'lar ana şanzımana sağ yandan, sol yandan veya kuyruktan bağlanabilirler.
Kuyruktan bağlanan PTO'lar düz tip (tek dişli) ve aktarmalı tip (çift dişli) olarak ikiye ayrılır.
PTO'lar çalışma sistemine göre havalı, mekanik veya vakumlu olarak üç gruba ayrılır.
PTO çıkışları Iso, Uni, pim delikli ve flanşlı olmak üzere dört farklı çıkışa sahiptir.

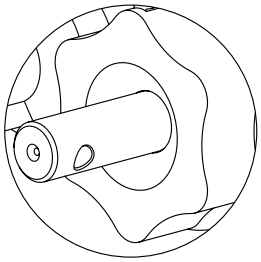

Pin Hole / Pim Delikli

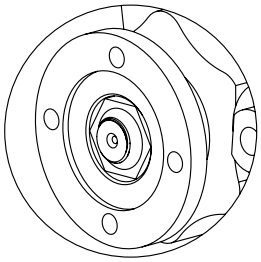

Flange / Flanşlı

## POINTS TO BE CONSIDERED WHEN SELECTING PTO

Identify the vehicle's and the gearbox' models from the gearbox label.
Determine the relevant PTO group and its varieties from the catalogue.
Chose the suitable PTO for your mounting side (rear, side, or bottom).
Select the PTO compatible with the gear box.Determine whether the power and speed produced by the PTO meet your needs.Determine additional products (drive shaft, flange, coupling, etc) you may need together with the PTO.
Determine the PTO operating method (pneumatic, mechanic, vacuum).

## PTO SEÇİMİNDE DİKKAT EDİLECEK HUSUSLAR

Aracın modelini ve ana şanzıman model nosunu ana şanzıman üzerindeki etiketten tam olarak belirleyin. Katalogdan ilgili PTO grubunu ve çeşitlerini inceleyin.
Şanzıman bağlantı yerini belirleyin (kuyruk, sağ,sol)
Ana şanzımana uygun PTO'yu seçin.
PTO'nun ürettiği gücün ve devrin sizin gereksiniminizi karşılayıp karşılamadığını belirleyin.
PTO ile birlikte ihtiyacınız olabilecek ek ürünleri (kardan mili, flanş, kaplin vb.) belirleyin.
PTO`nun kumanda tipini belirleyiniz(havalı, mekanik, vakumlu)

## POINTS TO BE TAKEN INTO CONSIDERATION DURING THE ASSEMBLY

Stop the vehicle engine during the assembly.
Discharge the gear box oil into a can.
Open the cover protecting the main transmission gear. Clean the mounting surface and bolt holes.
Tighten well the PTO mounting studs to the gearbox.
Grease the PTO seal to keep it stable during assembly. The grease used must be permanent. The tightening torque for the bolts should be 60 Nm for 6-hole PTOs, 70Nm for 8-hole PTOs, and 70Nm for 4-hole PTOs from the tail. After mounting the PTO, run the engine for 5-10 seconds and listen to the sound coming from the PTO. If the sound is groaning, the clearance between the teeth is too tight. Remove the PTO and add another gasket or a slightly thicker one.Put a thinner seal if the noise is clattering. Never let the PTO and the gearbox surfaces come into contact. Refill the drained gearbox oil and top up if missing. Never move the vehicle without checking the oil level. Run the engine for 5-10 minutes. If you do not encounter any problems during this time, then installation is successful. Control again the tightness of bolts and make a last visual control. Mount the hose coming from the compressor to the PTO. Minimum 6 bar Control whether PTO works or not.

## MONTAJ YAPILIRKEN DİKKAT EDİLMESİ GEREKEN HUSUSLAR

Montaj sırasında aracın motorunu kapatın.
Ana şanzıman yağını kapalı bir kutuya boşaltın.
Ana şanzıman dişlisini koruyan kapağı açın. Bağlantı yüzeyini ve cıvata deliklerini temizleyin.
PTO bağlantı saplamalarını ana şanzımana gevşemeyecek şekilde sıkın.
PTO contasını montaj esnasında sabit durması için gres ile yağlayın.
Kullanılan yağ kalıcı olmalıdır.
6 delikli PTO'larda cıvatalar 60Nm, 8 delikli PTO'larda 70Nm, kuyruktan 4 delikli PTO'larda 70Nm olmalıdır.
PTO'yu ana şanzımana monte ettikten sonra motoru 5-10 sn kadar çalıştırın ve PTO'dan gelen sesi dinleyin. Ses iniltili ise dişler birbirinin üzerine fazla basmış olabilir. PTO'yu alıp bir conta daha veya biraz daha kalın bir conta takın. Eğer PTO'dan gelen ses takırtılı ise daha ince bir conta takın. Hiçbir zaman PTO ile şanzıman yüzeyini birbirine temas ettirmeyelim.
Boşaltılan ana şanzıman yağını doldurun, eksik ise tamamlayın. Kontrol etmeden kesinlikle aracı hareket ettirmeyin.
Motoru 5-10 dakika kadar çalıştırın. Bu süre zarfında herhangi bir problemle karşılaşmadığınız takdirde montaj başarılı olmuştur.
Cıvataların sıkılığını tekrar kontrol edin, gözle son kontrolü yapın.
Kompresörden gelen hortumu PTO'ya takın. Minimum 6 bar.
PTO'nun devreye geçip geçmediğini kontrol edin.

## PTO PROPLEMS

a-) PTO Not Engaging
1) The most important reason for this problem is that the air pressure is not high enough or there is a leak in the air pressure hose.
PTOs operate at 6 bar pressure and above.
2) Dusty or humid air comes to the PTO. The air should be cleaned in the evenings and renewed if necessary.
3) Ifthe pneumatic piston does not work for a certain period, it may get jammed and the PTO will not work even if the air pressure is high enough.
4) Dumper button may be deteriorated.
b) PTO Not Disengaging
1) Pneumatic piston may be deteriorated. This is generally due to coming of dusty and wet air to the piston.
2) Dumper button may be deteriorated. It does not discharge and let the piston free.
3) Gear ends may get swelled and do not let the couplar gear free on uses without clutch.
c) Other problems
1) Torque provided by PTO decreases if the impermeability is not fit and seals are not assembled in the right way.
2) A loud noise emerges from the PTO if coupler gear and transmission gear are not tightly assembled. Ball bearings and gears may be damaged if the problem is not solved.
3) PTO and the gear box may be severely damaged if the vehicle starts to work without PTO getting disengaged.

## PTO PROBLEMLERİ

a-) PTO Devreye Geçmemesi
1-) Bu sorunun en önemli nedeni hava basıncının yeterince yüksek olmayışı yada hava basınç hortumunda bir kaçak olmasıdır.
PTO'lar 6 bar basınç ve üzerinde çalışır.
2-) PTO'ya tozlu veya sulu hava gelmektedir. Hava akşamları temizlenmeli, gerekirse yenilenmelidir.
3-) Pnömatik piston belli bir süre çalışmadığı zaman sıkışma yapabilir ve hava basıncı yüksek olsa bile PTO çalışmaz.
4-) Damper düğmesi bozulmuş olabilir.
b-) PTO'nun Devreden Çıkmaması
1-) Pnömatik piston bozulmuştur. Genelde pistonun içine tozlu ve sulu hava gelmesinden kaynaklanır.
2-) Damper düğmesi bozulmuştur. Tahliye yapmaz, pistonu bırakmaz.
3-) Debriyajsız kullanımlarda dişli uçları şişme yapıp kavrama dişlisini bırakmayabilir.
c-) Diğer Problemler
1-) PTO üzerindeki sızdırmazlık ve contaların doğru monte edilmemesi durumunda PTO'nun ürettiği tork düşer.
2-) Kavrama dişlisi ile ana şanzıman dişlisinin birbirine sıkı monte edilmesi sonucu PTO'dan yüksek ses çıkar. Sorun giderilmediği taktirde zamanla rulmanlar ve dişliler zarar görebilir.
3-) Araç PTO devreden çıkarılmadan hareket ettirilirse PTO'ya ve ana şanzımana ciddi zararlar verebilir.

# MERCEDES G155-1 SINGLE GEAR ISO

## MERCEDES G155-1 TEK DİŞLİ ISO



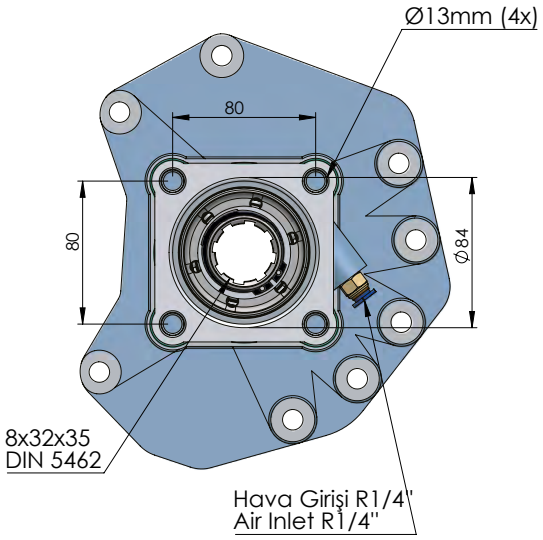


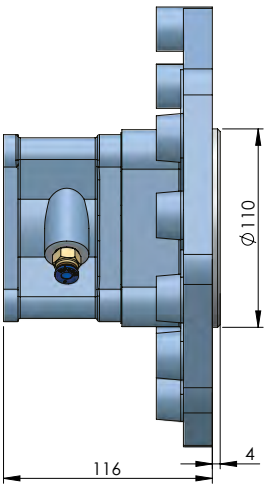


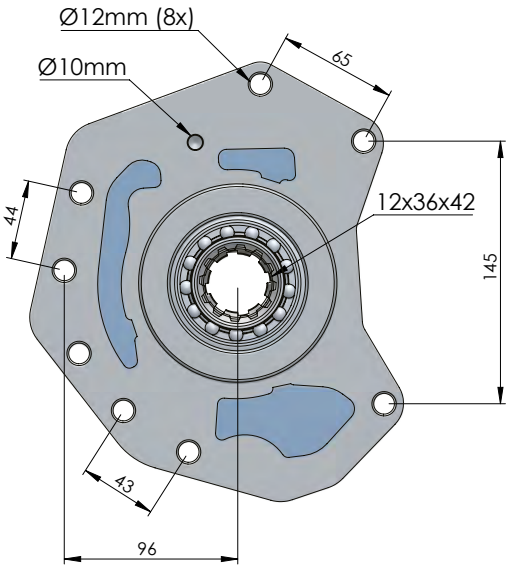


| CODE<br>KOD | TYPE<br>TİP (A) | MOUNTING TYPE<br>BAĞLANTI TİPİ (B) | MOUNTING SIDE<br>BAĞLANTI | TORQUE<br>TORK<br>(Kgm / Nm) | POWER<br>GÜÇ<br>(Hp / Kw) | SPEED<br>DEVİR<br>(RPM) | RATIO<br>ORAN |
|---|---|---|---|---|---|---|---|
| 50126312P0 | PNEUMATIC<br>PNÖMATİK | UNI ADAPTER<br>ADAPTÖRLÜ UNI | REAR<br>KUYRUK | 23 Kgm<br>255 Nm | 16 Hp<br>12 Kw | 500 | 1:1 |
| 50126322P0 | | ISO | | | | | |
| 50126332P0 | | FLANGE<br>ADAPTÖRLÜ FLANŞLI | | | | | |
| 50126342P0 | | SHAFT<br>ADAPTÖRLÜ ŞAFTLI | | | | | |

| GEARBOX / ANA ŞANZIMANLAR | USED VEHICLES / KULLANILAN BAZI ARAÇLAR |
|---|---|
| G 125-16 / G 135-16 / G 155-16 / G 180-16 / G 200-16 / G 210-16 / G 240-16 / G 255 / G 210-16<br>/ G 211-16 / G 240 / G 260-16 (17,03) G 260-16 (11,9-15,9-14,2-11,7-9,75) / G 221 - 9 / 16,02 EPS (IdNr: 715561 Code: GD5) / G 181-9 (BRAZIL) / G 141-9 EURO 6 / G 131-9 (16,02-14,57) EPS<br>(IdNr: 715570 Code: NC5) / G 231-16 / G 241 / G 281 / G 330-12 (11,63-16,17) | 1729-1735-1827-1834-1838-1929-1935-2038-2429-2435-2527-2531-2534-2629-2631-2635-2638 -3229-3234-3534-3535-1831-1835-1840-1844-1848-1850-1857-1934-1938-1953-2044-2050- 2544-2550-2650-2643-2644-3031-3234-3331-3348 4148-3335-3336-3340-3235-3340-2031 -2040-2648-3548-3553-3557-3538-2641-3244 ACTROS 1628-1831-1833-1834-1835-1840-1841 -1843-1846-1858-2040-2535-2540-2543-3028-3228-3235-3326-4040-4141-4148- 2640-3225- 3235-3236-3240-3340-3344-4038-4041-4140-4143-4148-3240-4041-4148-2628-1824-4160 AXOR Mercedes - Benz Atron 1635-2324-2729 Do Brazil 2012 Blue Tec 5 BRAZIL Gearbox: G 181-9 / SISU TRUCK AROCS 1842 |



Seçeceğiniz pompanın dönüş yönü, P.T.O. dönüş yönü ile ters olmalıdır.
The rotation of the choosen pump has to be opposite to the rotation of P.T.O.

P.T.O. montaj edildikten sonra ana şanzıman yağını tamamlayın.
Fill the oil of the gear box after mounting the P.T.O.

# MERCEDES G155-1 SINGLE GEAR ORIGINAL TYPE ISO

## MERCEDES G155-1 TEK DİŞLİ ORİJİNAL TİP ISO

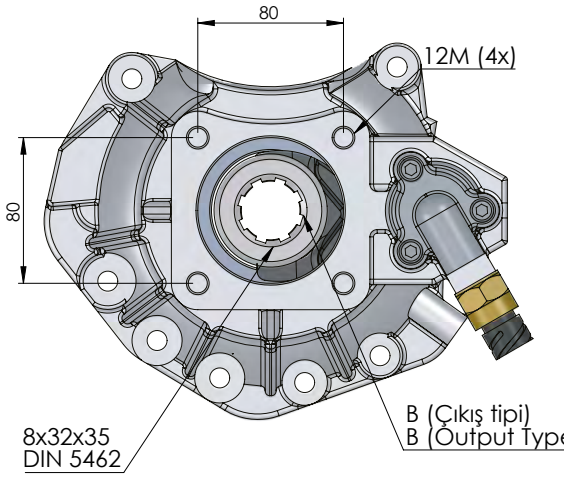




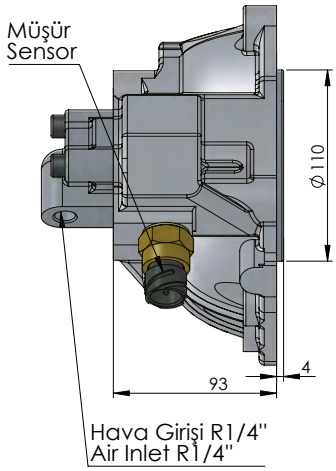


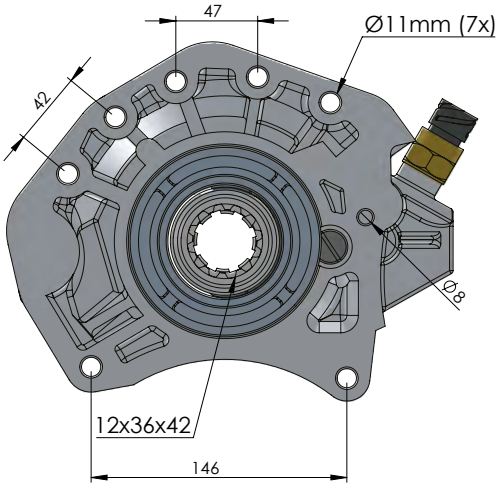


| CODE<br>KOD | TYPE<br>TİP (A) | MOUNTING TYPE<br>BAĞLANTI TİPİ (B) | MOUNTING SIDE<br>BAĞLANTI | TORQUE<br>TORK<br>(Kgm / Nm) | POWER<br>GÜÇ<br>(Hp / Kw) | SPEED<br>DEVİR<br>(RPM) | RATIO<br>ORAN |
|---|---|---|---|---|---|---|---|
| 50125312P1 | PNEUMATIC<br>PNÖMATİK | UNI ADAPTER<br>ADAPTÖRLÜ UNI | REAR<br>KUYRUK | 23 Kgm<br>255 Nm | 16 Hp<br>12 Kw | 500 | 1:1 |
| 50125322P1 | | ISO | | | | | |
| 50125332P1 | | FLANGE<br>ADAPTÖRLÜ FLANŞLI | | | | | |
| 50125342P1 | | SHAFT<br>ADAPTÖRLÜ ŞAFTLI | | | | | |

| GEARBOX / ANA ŞANZIMANLAR | USED VEHICLES / KULLANILAN BAZI ARAÇLAR |
|---|---|
| G 125-16 / G 135-16 / G 155-16 / G 180-16 / G 200-16 / G 210-16 / G 240-16 / G 255 / G 210-16 / G 211-16 / G 240 / G 260-16 (17,03) G 260-16 (11,9-15,9-14,2-11,7-9,75) / G 221 - 9 / 16,02 EPS (IdNr: 715561 Code: GD5) / G 181-9 (BRAZIL) / G 141-9 EURO 6 / G 131-9 (16,02-14,57) EPS (IdNr: 715570 Code: NC5) / G 231-16 / G 241 / G 281 / G 330-12 (11,63-16,17) | 1729-1735-1827-1834-1838-1929-1935-2038-2429-2435-2527-2531-2534-2629-2631-2635-2638 -3229-3234-3534-3535-1831-1835-1840-1844-1848-1850-1857-1934-1938-1953-2044-2050- 2544-2550-2650-2643-2644-3031-3234-3331-3348 4148-3335-3336-3340-3235-3340-2031-2040-2648-3548-3553-3557-3538-2641-3244 ACTROS 1628-1831-1833-1834-1835-1840-1841 -1843-1846-1858-2040-2535-2540-2543-3028-3228-3235-3326-4040-4141-4148- 2640-3225- 3235-3236-3240-3340-3344-4038-4041-4140-4143-4148-3240-4041-4148-2628-1824-4160 AXOR Mercedes - Benz Atron 1635-2324-2729 Do Brazil 2012 Blue Tec 5 BRAZIL Gearbox: G 181-9 / SISU TRUCK AROCS 1842 |

Seçeceğiniz pompanın dönüş yönü, P.T.O. dönüş yönü ile ters olmalıdır.
The rotation of the choosen pump has to be opposite with the rotation of P.T.O.

P.T.O. montaj edildikten sonra ana şanzıman yağını tamamlayın.
Fill the oil of the gear box after mounting the P.T.O.

# MERCEDES G155-1 SINGLE GEAR ISO

## MERCEDES G155-1 TEK DİŞLİ PLATESİZ ISO



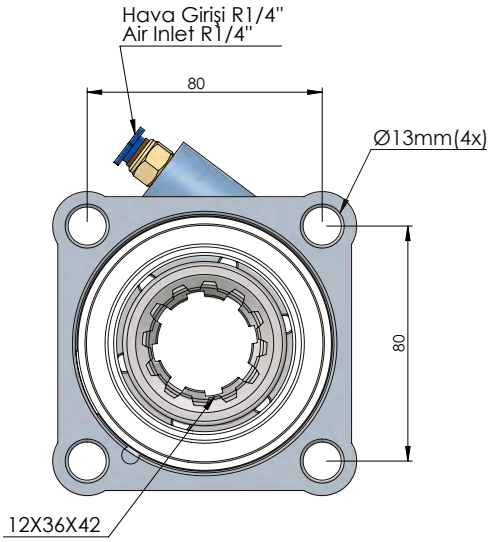


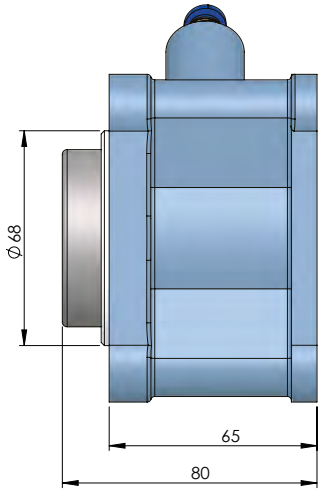


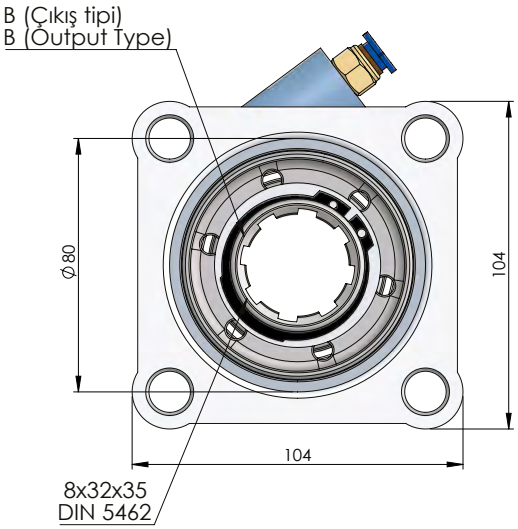


| CODE<br>KOD | TYPE<br>TİP (A) | MOUNTING TYPE<br>BAĞLANTI TİPİ (B) | MOUNTING SIDE<br>BAĞLANTI | TORQUE<br>TORK<br>(Kgm / Nm) | POWER<br>GÜÇ<br>(Hp / Kw) | SPEED<br>DEVİR<br>(RPM) | RATIO<br>ORAN |
|---|---|---|---|---|---|---|---|
| 50128312P0 | PNEUMATIC<br>PNÖMATİK | UNI ADAPTER<br>ADAPTÖRLÜ UNI | REAR<br>KUYRUK | 23 Kgm<br>255 Nm | 16 Hp<br>12 Kw | 500 | 1:1 |
| 50128322P0 | | ISO | | | | | |
| 50128332P0 | | FLANGE<br>ADAPTÖRLÜ FLANŞLI | | | | | |
| 50128342P0 | | SHAFT<br>ADAPTÖRLÜ ŞAFTLI | | | | | |

| GEARBOX / ANA ŞANZIMANLAR | USED VEHICLES / KULLANILAN BAZI ARAÇLAR |
|---|---|
| G 125-16 / G 135-16 / G 155-16 / G 180-16 / G 200-16 / G 210-16 / G 240-16 / G 255 / G 210-16 / G 211-16 / G 240 / G 260-16 (17,03) G 260-16 (11,9-15,9-14,2-11,7-9,75) / G 221 - 9 / 16,02 EPS (IdNr: 715561 Code: GD5) / G 181-9 (BRAZIL) / G 141-9 EURO 6 / G 131-9 (16,02-14,57) EPS (IdNr: 715570 Code: NC5) / G 231-16 / G 241 / G 281 / G 330-12 (11,63-16,17) | 1729-1735-1827-1834-1838-1929-1935-2038-2429-2435-2527-2531-2534-2629-2631-2635-2638 -3229-3234-3534-3535-1831-1835-1840-1844-1848-1850-1857-1934-1938-1953-2044-2050- 2544-2550-2650-2643-2644-3031-3234-3331-3348 4148-3335-3336-3340-3235-3340-2031 -2040-2648-3548-3553-3557-3538-2641-3244 ACTROS 1628-1831-1833-1834-1835-1840-1841 -1843-1846-1858-2040-2535-2540-2543-3028-3228-3235-3326-4040-4141-4148- 2640-3225- 3235-3236-3240-3340-3344-4038-4041-4140-4143-4148-3240-4041-4148-2628-1824-4160 AXOR Mercedes - Benz Atron 1635-2324-2729 Do Brazil 2012 Blue Tec 5 BRAZIL Gearbox: G 181-9 / SISU TRUCK AROCS 1842 |



Seçeceğiniz pompanın dönüş yönü, P.T.O. dönüş yönü ile ters olmalıdır.
The rotation of the choosen pump has to be opposite to the rotation of P.T.O.

P.T.O. montaj edildikten sonra ana şanzıman yağını tamamlayın.
Fill the oil of the gear box after mounting the P.T.O.

# MERCEDES G155-1 ALUMINUM SINGLE GEAR ISO

## MERCEDES G155-1 ALÜMİNYUM TEK DİŞLİ PLATELİ ISO

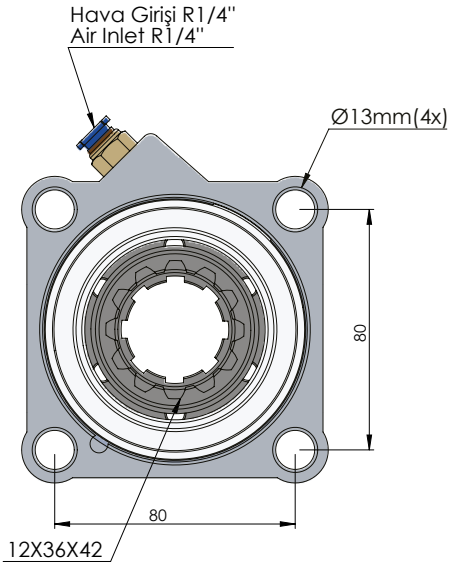




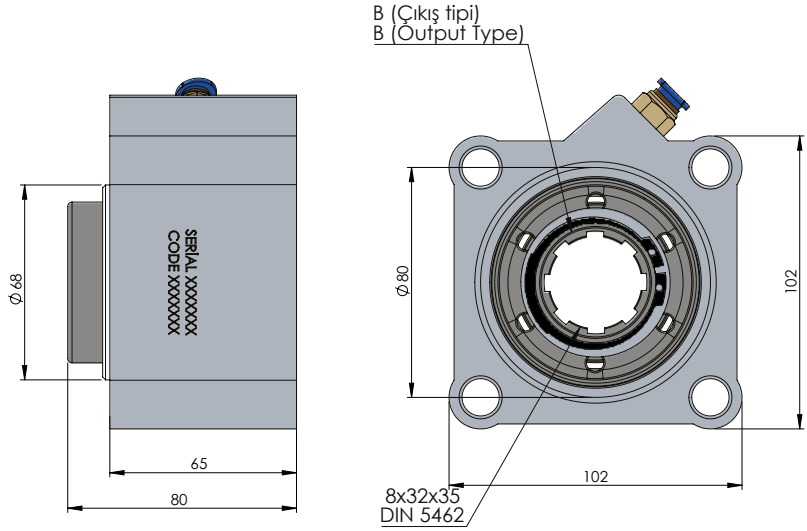


| CODE<br>KOD | TYPE<br>TİP (A) | MOUNTING TYPE<br>BAĞLANTI TİPİ (B) | MOUNTING SIDE<br>BAĞLANTI | TORQUE<br>TORK<br>(Kgm / Nm) | POWER<br>GÜÇ<br>(Hp / Kw) | SPEED<br>DEVİR<br>(RPM) | RATIO<br>ORAN |
|---|---|---|---|---|---|---|---|
| 50127312P0 | PNEUMATIC<br>PNÖMATİK | UNI ADAPTER<br>ADAPTÖRLÜ UNI | REAR<br>KUYRUK | 23 Kgm<br>255 Nm | 16 Hp<br>12 Kw | 500 | 1:1 |
| 50127322P0 | | ISO | | | | | |
| 50127332P0 | | FLANGE<br>ADAPTÖRLÜ FLANŞLI | | | | | |
| 50127342P0 | | SHAFT<br>ADAPTÖRLÜ ŞAFTLI | | | | | |

| GEARBOX / ANA ŞANZIMANLAR | USED VEHICLES / KULLANILAN BAZI ARAÇLAR |
|---|---|
| G 125-16 / G 135-16 / G 155-16 / G 180-16 / G 200-16 / G 210-16 / G 240-16 / G 255 / G 210-16 / G 211-16 / G 240 / G 260-16 (17,03) G 260-16 (11,9-15,9-14,2-11,7-9,75) / G 221 - 9 / 16,02 EPS (IdNr: 715561 Code: GD5) / G 181-9 (BRAZIL) / G 141-9 EURO 6 / G 131-9 (16,02-14,57) EPS (IdNr: 715570 Code: NC5) / G 231-16 / G 241 / G 281 / G 330-12 (11,63-16,17) | 1729-1735-1827-1834-1838-1929-1935-2038-2429-2435-2527-2531-2534-2629-2631-2635-2638 -3229-3234-3534-3535-1831-1835-1840-1844-1848-1850-1857-1934-1938-1953-2044-2050- 2544-2550-2650-2643-2644-3031-3234-3331-3348 4148-3335-3336-3340-3235-3340-2031 -2040-2648-3548-3553-3557-3538-2641-3244 ACTROS 1628-1831-1833-1834-1835-1840-1841 -1843-1846-1858-2040-2535-2540-2543-3028-3228-3235-3326-4040-4141-4148- 2640-3225- 3235-3236-3240-3340-3344-4038-4041-4140-4143-4148-3240-4041-4148-2628-1824-4160 AXOR Mercedes - Benz Atron 1635-2324-2729 Do Brazil 2012 Blue Tec 5 BRAZIL Gearbox: G 181-9 / SISU TRUCK AROCS 1842 |

Seçeceğiniz pompanın dönüş yönü, P.T.O. dönüş yönü ile ters olmalıdır.
The rotation of the choosen pump has to be opposite with the rotation of P.T.O.

P.T.O. montaj edildikten sonra ana şanzıman yağını tamamlayın.
Fill the oil of the gear box after mounting the P.T.O.

# MERCEDES G155-2 DOUBLE GEAR ISO

## MERCEDES G155-2 AKTARMALI ISO



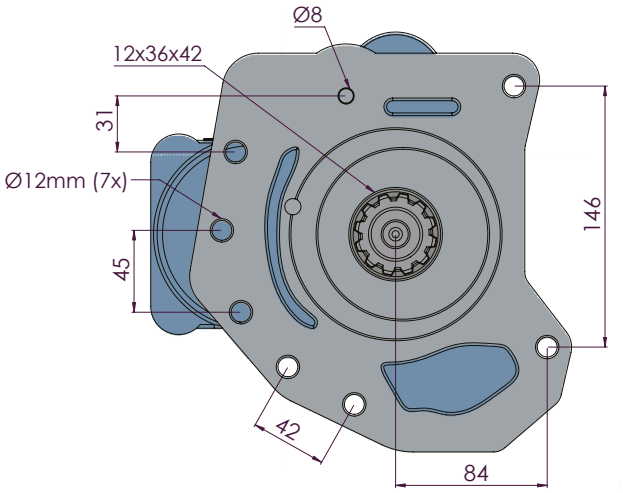


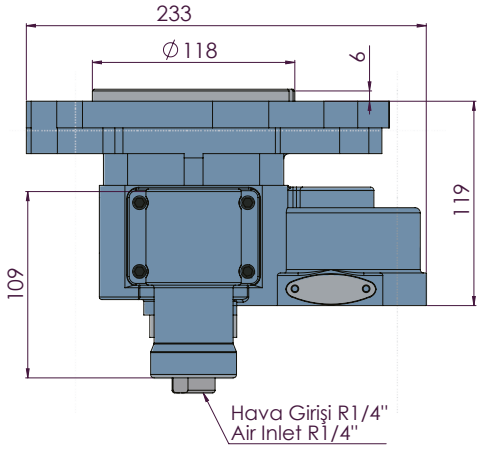


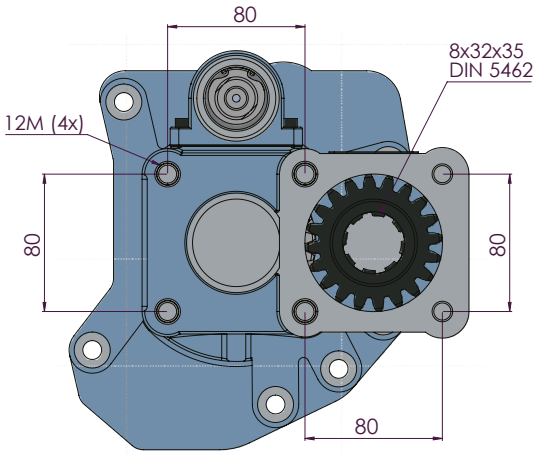


| CODE<br>KOD | TYPE<br>TİP (A) | MOUNTING TYPE<br>BAĞLANTI TİPİ (B) | MOUNTING SIDE<br>BAĞLANTI | TORQUE<br>TORK<br>(Kgm / Nm) | POWER<br>GÜÇ<br>(Hp / Kw) | SPEED<br>DEVİR<br>(RPM) | RATIO<br>ORAN |
|---|---|---|---|---|---|---|---|
| 50137311P0 | PNEUMATIC<br>PNÖMATİK | UNI ADAPTER<br>ADAPTÖRLÜ UNI | REAR<br>KUYRUK | 30 Kgm<br>295 Nm | 57,7 Hp<br>43 Kw | 675 | 1:1,12 |
| 50137321P0 | | ISO | | | | | |
| 50137331P0 | | FLANGE<br>ADAPTÖRLÜ FLANŞLI | | | | | |
| 50137341P0 | | SHAFT<br>ADAPTÖRLÜ ŞAFTLI | | | | | |

| GEARBOX / ANA ŞANZIMANLAR | USED VEHICLES / KULLANILAN BAZI ARAÇLAR |
|---|---|
| G 100-12 G 100-12 / G 140-8 | 1528-1823-1828-1924-2523-2528-2623-2628-2832-3224-3228 AXOR / 2632 ACTROS 823-923- 1023-1223-1225-1228-1323-1328-1523-1528-1828-2528-2628 ATEGO |



Seçeceğiniz pompanın dönüş yönü, P.T.O. dönüş yönü ile ters olmalıdır.
The rotation of the choosen pump has to be opposite to the rotation of P.T.O.

P.T.O. montaj edildikten sonra ana şanzıman yağını tamamlayın.
Fill the oil of the gear box after mounting the P.T.O.

# MERCEDES G100-1 SINGLE GEAR ISO

## MERCEDES G100-1 TEK DİŞLİ ISO

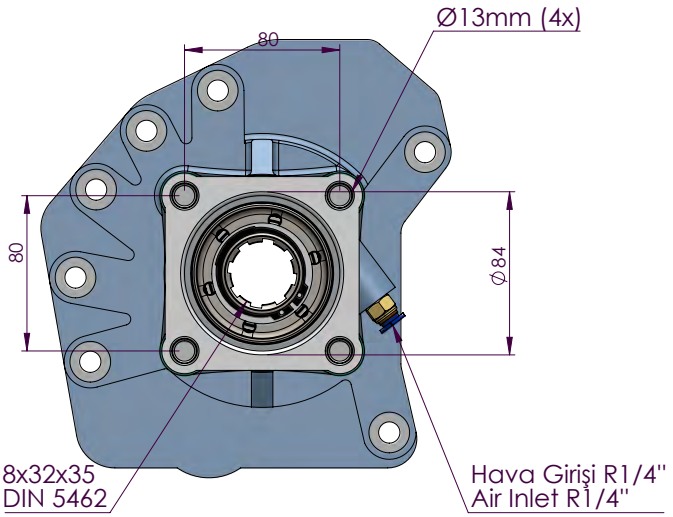




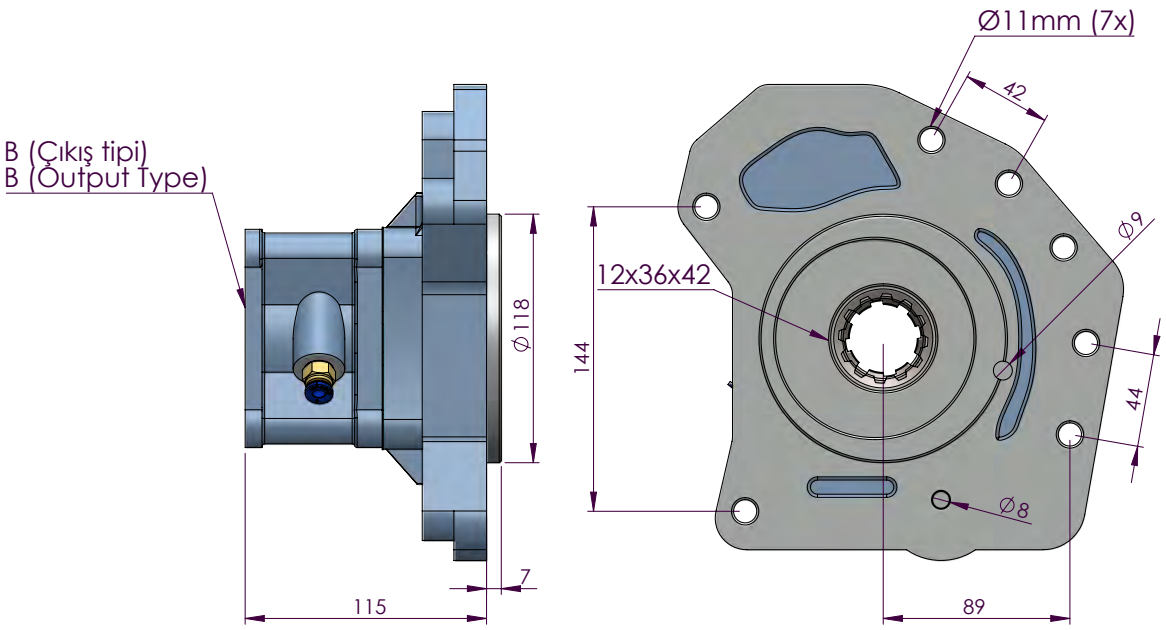


| CODE<br>KOD | TYPE<br>TİP (A) | MOUNTING TYPE<br>BAĞLANTI TİPİ (B) | MOUNTING SIDE<br>BAĞLANTI | TORQUE<br>TORK<br>(Kgm / Nm) | POWER<br>GÜÇ<br>(Hp / Kw) | SPEED<br>DEVİR<br>(RPM) | RATIO<br>ORAN |
|---|---|---|---|---|---|---|---|
| 50124312P0 | PNEUMATIC<br>PNÖMATİK | UNI ADAPTER<br>ADAPTÖRLÜ UNI | REAR<br>KUYRUK | 24 Kgm<br>235,5 Nm | 16 Hp<br>12 Kw | 500 | 1:1 |
| 50124322P0 | | ISO | | | | | |
| 50124332P0 | | FLANGE<br>ADAPTÖRLÜ FLANŞLI | | | | | |
| 50124342P0 | | SHAFT<br>ADAPTÖRLÜ ŞAFTLI | | | | | |

| GEARBOX / ANA ŞANZIMANLAR | USED VEHICLES / KULLANILAN BAZI ARAÇLAR |
|---|---|
| G 100-12 G 100-12 / G 140-8 | 1528-1823-1828-1924-2523-2528-2623-2628-2832-3224-3228 AXOR / 2632 ACTROS 823-923- 1023-1223-1225-1228-1323-1328-1523-1528-1828-2528-2628 ATEGO |

Seçeceğiniz pompanın dönüş yönü, P.T.O. dönüş yönü ile ters olmalıdır.
The rotation of the choosen pump has to be opposite with the rotation of P.T.O.

P.T.O. montaj edildikten sonra ana şanzıman yağını tamamlayın.
Fill the oil of the gear box after mounting the P.T.O.

# MERCEDES G100-2 DOUBLE GEAR UNI

## MERCEDES G100-2 AKTARMALI UNI



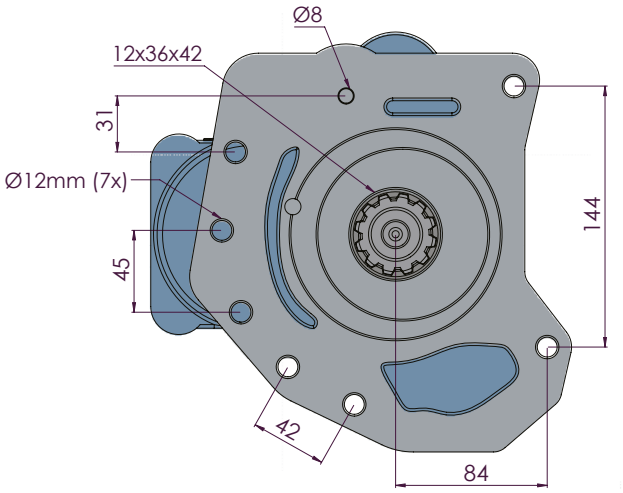


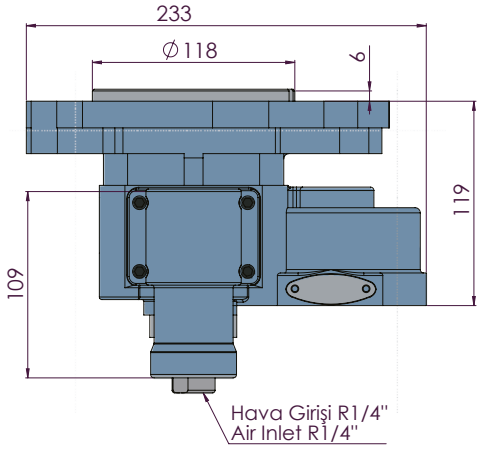


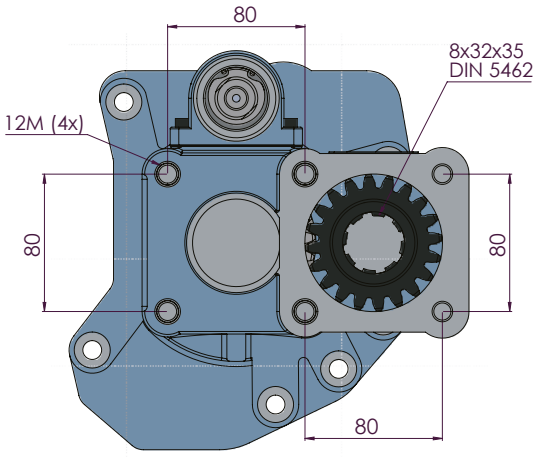


| CODE<br>KOD | TYPE<br>TİP (A) | MOUNTING TYPE<br>BAĞLANTI TİPİ (B) | MOUNTING SIDE<br>BAĞLANTI | TORQUE<br>TORK<br>(Kgm / Nm) | POWER<br>GÜÇ<br>(Hp / Kw) | SPEED<br>DEVİR<br>(RPM) | RATIO<br>ORAN |
|---|---|---|---|---|---|---|---|
| 50137311P0 | PNEUMATIC<br>PNÖMATİK | UNI ADAPTER<br>ADAPTÖRLÜ UNI | REAR<br>KUYRUK | 30 Kgm<br>295 Nm | 57,7 Hp<br>43 Kw | 675 | 1:1,12 |
| 50137321P0 | | ISO | | | | | |
| 50137331P0 | | FLANGE<br>ADAPTÖRLÜ FLANŞLI | | | | | |
| 50137341P0 | | SHAFT<br>ADAPTÖRLÜ ŞAFTLI | | | | | |

| GEARBOX / ANA ŞANZIMANLAR | USED VEHICLES / KULLANILAN BAZI ARAÇLAR |
|---|---|
| G 100-12 G 100-12 / G 140-8 | 1528-1823-1828-1924-2523-2528-2623-2628-2832-3224-3228 AXOR / 2632 ACTROS 823-923- 1023-1223-1225-1228-1323-1328-1523-1528-1828-2528-2628 ATEGO |



Seçeceğiniz pompanın dönüş yönü, P.T.O. dönüş yönü ile ters olmalıdır.
The rotation of the choosen pump has to be opposite to the rotation of P.T.O.

P.T.O. montaj edildikten sonra ana şanzıman yağını tamamlayın.
Fill the oil of the gear box after mounting the P.T.O.

# MERCEDES G 100-3 DOUBLE GEAR UNI

## MERCEDES G100-3 GRUBA SABİT AKTARMALI UNI

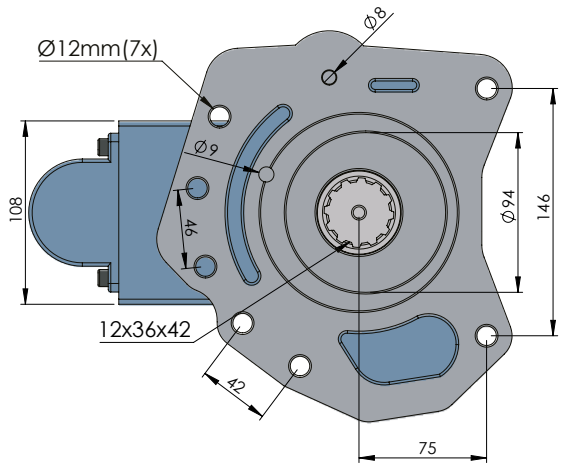




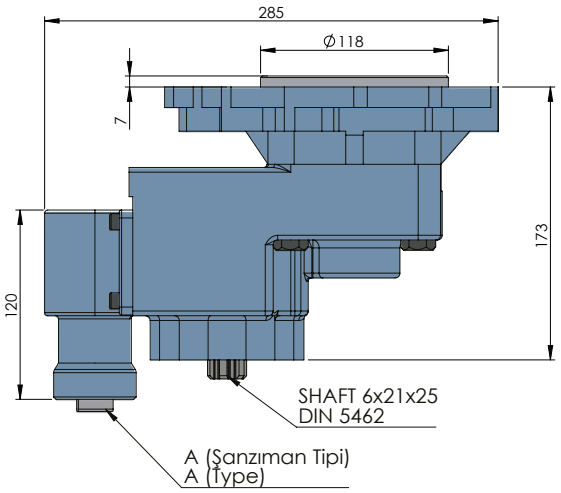


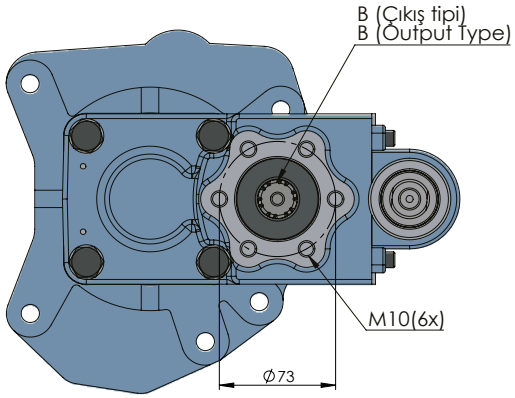


| CODE<br>KOD | TYPE<br>TİP (A) | MOUNTING TYPE<br>BAĞLANTI TİPİ (B) | MOUNTING SIDE<br>BAĞLANTI | TORQUE<br>TORK<br>(Kgm / Nm) | POWER<br>GÜÇ<br>(Hp / Kw) | SPEED<br>DEVİR<br>(RPM) | RATIO<br>ORAN |
|---|---|---|---|---|---|---|---|
| 50124311P0 | PNEUMATIC<br>PNÖMATİK | UNI | REAR<br>KUYRUK | 22,4 Kgm<br>219,7 Nm | 20 Hp<br>14,9 Kw | 650 | 1:1,12 |
| 50124321P0 | | ISO ADAPTER<br>ADAPTÖRLÜ ISO | | | | | |
| 50124331P0 | | FLANGE<br>FLANŞLI | | | | | |
| 50124341P0 | | SHAFT<br>ŞAFTLI | | | | | |

| GEARBOX / ANA ŞANZIMANLAR | USED VEHICLES / KULLANILAN BAZI ARAÇLAR |
|---|---|
| G 100-12 G 100-12 / G 140-8 | 1528-1823-1828-1924-2523-2528-2623-2628-2832-3224-3228 AXOR / 2632 ACTROS 823-923- 1023-1223-1225-1228-1323-1328-1523-1528-1828-2528-2628 ATEGO |



Seçeceğiniz pompanın dönüş yönü, P.T.O. dönüş yönü ile ters olmalıdır.
The rotation of the choosen pump has to be opposite with the rotation of P.T.O.

P.T.O. montaj edildikten sonra ana şanzıman yağını tamamlayın.
Fill the oil of the gear box after mounting the P.T.O.

# MERCEDES ATEGO 7 HOLES SINGLE GEAR ISO

## MERCEDES ATEGO 7 DELİK TEK DİŞLİ ISO



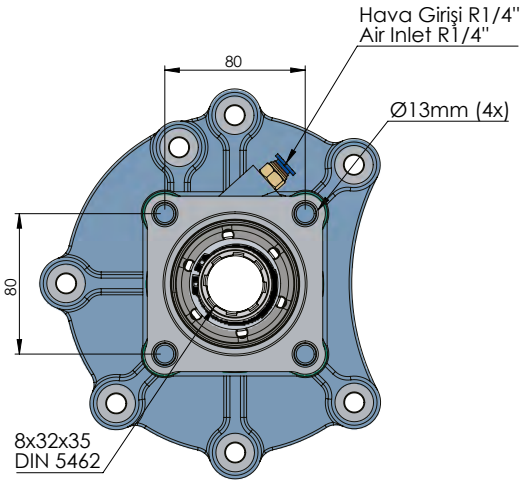


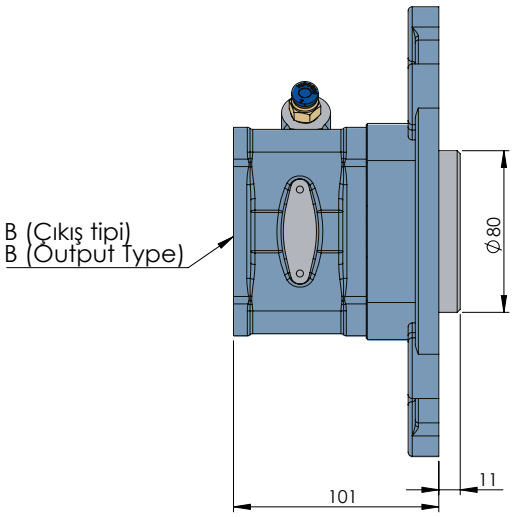


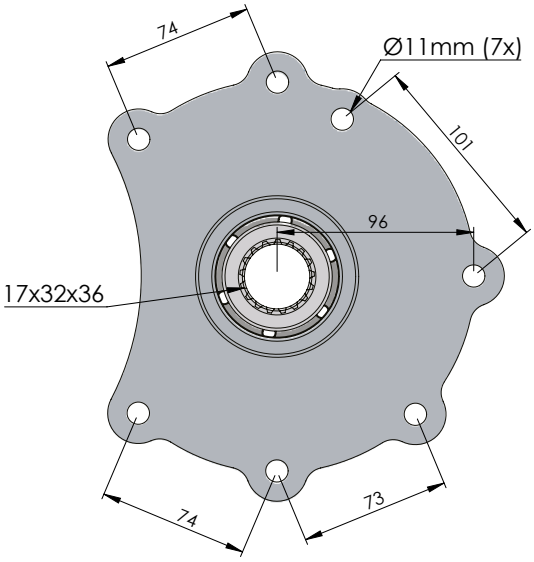


| CODE<br>KOD | TYPE<br>TİP (A) | MOUNTING TYPE<br>BAĞLANTI TİPİ (B) | MOUNTING SIDE<br>BAĞLANTI | TORQUE<br>TORK<br>(Kgm / Nm) | POWER<br>GÜÇ<br>(Hp / Kw) | SPEED<br>DEVİR<br>(RPM) | RATIO<br>ORAN |
|---|---|---|---|---|---|---|---|
| 50122312P0 | PNEUMATIC<br>PNÖMATİK | UNI ADAPTER<br>ADAPTÖRLÜ UNI | REAR<br>KUYRUK | 23 Kgm<br>255 Nm | 16 Hp<br>12 Kw | 500 | 1:1 |
| 50122322P0 | | ISO | | | | | |
| 50122332P0 | | FLANGE<br>ADAPTÖRLÜ FLANŞLI | | | | | |
| 50122332P0 | | SHAFT<br>ADAPTÖRLÜ ŞAFTLI | | | | | |

| GEARBOX / ANA ŞANZIMANLAR | USED VEHICLES / KULLANILAN BAZI ARAÇLAR |
|---|---|
| G 60-6 (9,20) / G 85-6 (6,70) G 90-6 / G 71-6 / G 70-6 | 614-712-715-812-814-815-818-817-823-917-923-925-1017-1023-1328-1215-1217-1223-1225-1323-1325-1518-1528-2124-1317-1323-1328-1517-1523-1618-1623-1823 ATEGO /U 400 UNIMOG / 1118-1318-2124 ATEGO 2010 MODEL |



Seçeceğiniz pompanın dönüş yönü, P.T.O. dönüş yönü ile ters olmalıdır.
The rotation of the choosen pump has to be opposite to the rotation of P.T.O.

P.T.O. montaj edildikten sonra ana şanzıman yağını tamamlayın.
Fill the oil of the gear box after mounting the P.T.O.

# MERCEDES ATEGO 7 HOLES DOUBLE GEAR UNI

## MERCEDES ATEGO 7 DELİK AKTARMALI UNI

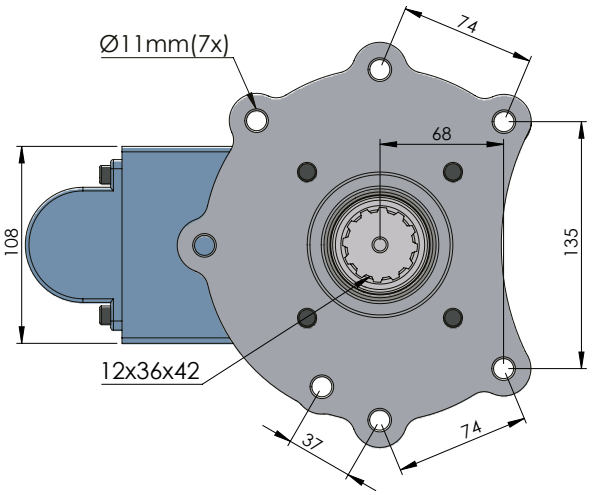




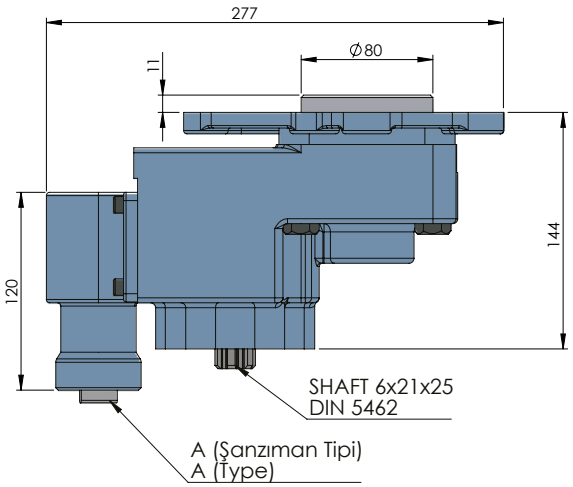


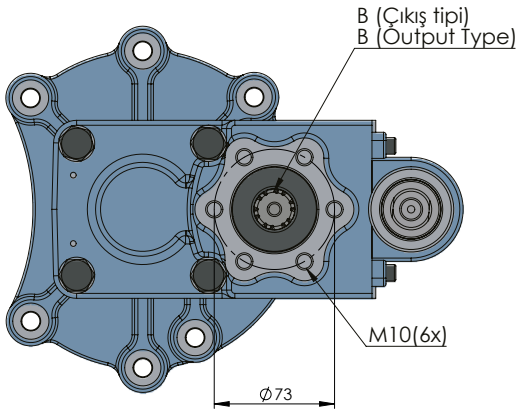


| CODE<br>KOD | TYPE<br>TİP (A) | MOUNTING TYPE<br>BAĞLANTI TİPİ (B) | MOUNTING SIDE<br>BAĞLANTI | TORQUE<br>TORK<br>(Kgm / Nm) | POWER<br>GÜÇ<br>(Hp / Kw) | SPEED<br>DEVİR<br>(RPM) | RATIO<br>ORAN |
|---|---|---|---|---|---|---|---|
| 50122311P0 | PNEUMATIC<br>PNÖMATİK | UNI | REAR<br>KUYRUK | 22,4 Kgm<br>219,7 Nm | 20 Hp<br>14,9 Kw | 650 | 1:1,12 |
| 50122321P0 | | ISO ADAPTER<br>ADAPTÖRLÜ ISO | | | | | |
| 50122331P0 | | FLANGE<br>FLANŞLI | | | | | |
| 50122341P0 | | SHAFT<br>ŞAFTLI | | | | | |

| GEARBOX / ANA ŞANZIMANLAR | USED VEHICLES / KULLANILAN BAZI ARAÇLAR |
|---|---|
| G 60-6 (9,20) / G 85-6 (6,70) G 90-6 / G 71-6 / G 70-6 | 614-712-715-812-814-815-818-817-823-917-923-925-1017-1023-1328-1215-1217-1223-1225-1323-1325-1518-1528-2124-1317-1323-1328-1517-1523-1618-1623-1823 ATEGO /U 400 UNIMOG / 1118-1318-2124 ATEGO 2010 MODEL |

Seçeceğiniz pompanın dönüş yönü, P.T.O. dönüş yönü ile ters olmalıdır.
The rotation of the choosen pump has to be opposite with the rotation of P.T.O.

P.T.O. montaj edildikten sonra ana şanzıman yağını tamamlayın.
Fill the oil of the gear box after mounting the P.T.O.

# MERCEDES ATEGO 6 HOLES SINGLE GEAR ISO

## MERCEDES ATEGO 6 DELİK TEK DİŞLİ ISO



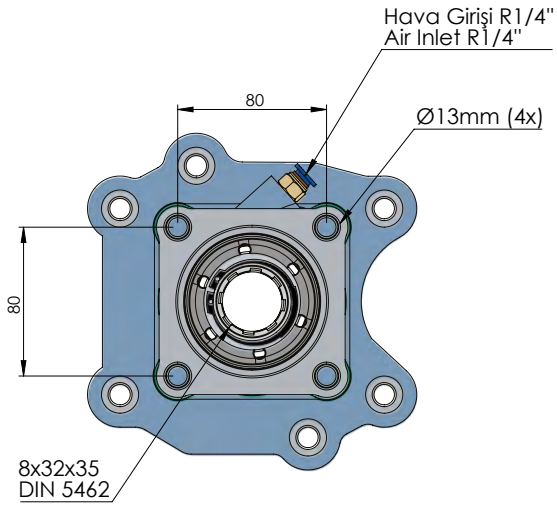


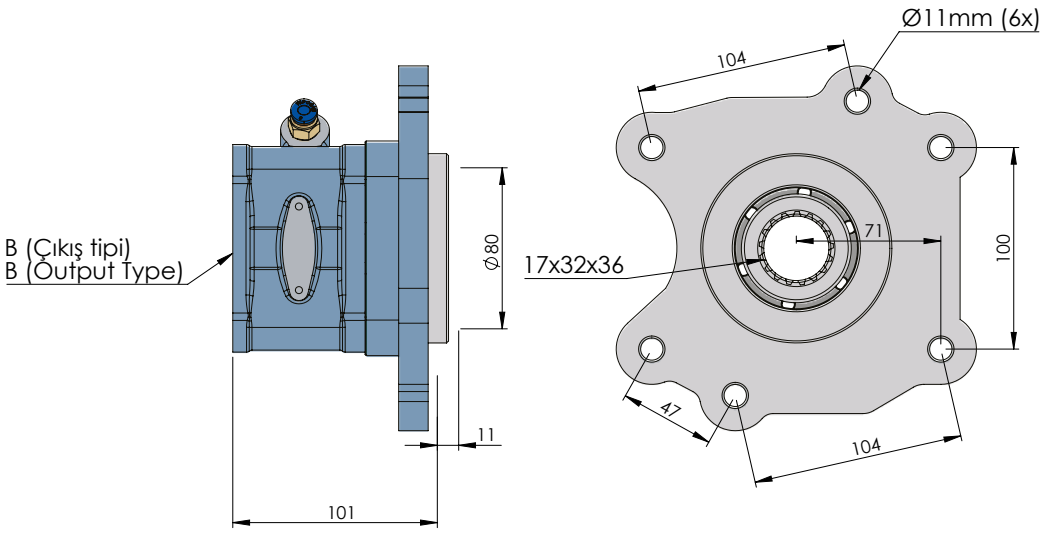


| CODE<br>KOD | TYPE<br>TİP (A) | MOUNTING TYPE<br>BAĞLANTI TİPİ (B) | MOUNTING SIDE<br>BAĞLANTI | TORQUE<br>TORK<br>(Kgm / Nm) | POWER<br>GÜÇ<br>(Hp / Kw) | SPEED<br>DEVİR<br>(RPM) | RATIO<br>ORAN |
|---|---|---|---|---|---|---|---|
| 50123312P0 | PNEUMATIC<br>PNÖMATİK | UNI ADAPTER<br>ADAPTÖRLÜ UNI | REAR<br>KUYRUK | 23 Kgm<br>255 Nm | 16 Hp<br>12 Kw | 500 | 1:1 |
| 50123322P0 | | ISO | | | | | |
| 50123332P0 | | FLANGE<br>ADAPTÖRLÜ FLANŞLI | | | | | |
| 50123342P0 | | SHAFT<br>ADAPTÖRLÜ ŞAFTLI | | | | | |

| GEARBOX / ANA ŞANZIMANLAR | USED VEHICLES / KULLANILAN BAZI ARAÇLAR |
|---|---|
| G 56-6 | 815(4x2)-816-1215-1517 ATEGO (2006) ATEGO 918-1216 / ACCELO<br>MERCEDES-BENZ 1016 (BRAZIL) |



Seçeceğiniz pompanın dönüş yönü, P.T.O. dönüş yönü ile ters olmalıdır.
The rotation of the choosen pump has to be opposite to the rotation of P.T.O.

P.T.O. montaj edildikten sonra ana şanzıman yağını tamamlayın.
Fill the oil of the gear box after mounting the P.T.O.

# MERCEDES ATEGO 6 HOLES DOUBLE GEAR UNI

## MERCEDES ATEGO 6 DELİK AKTARMALI UNI

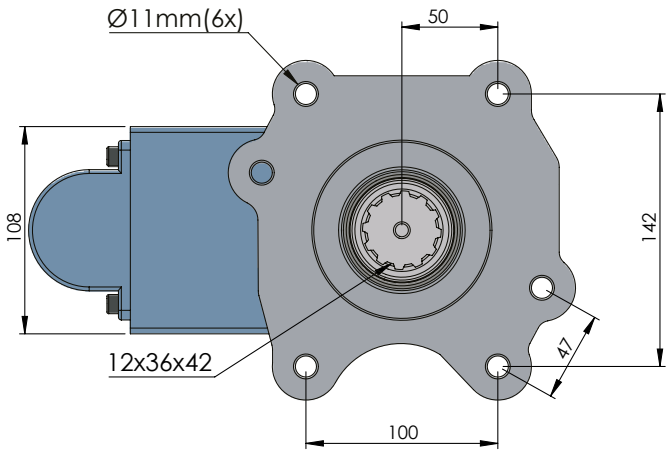




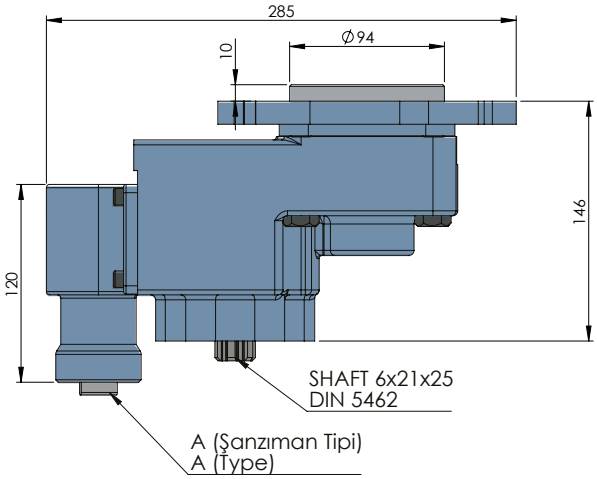


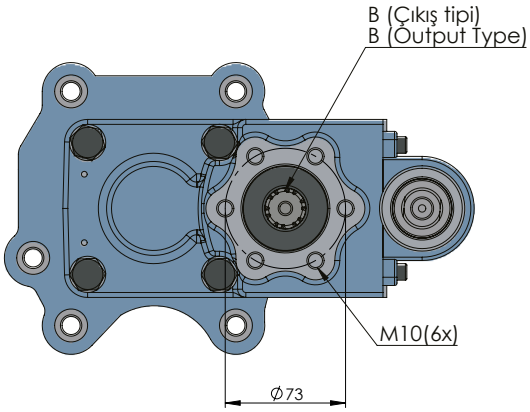


| CODE<br>KOD | TYPE<br>TİP (A) | MOUNTING TYPE<br>BAĞLANTI TİPİ (B) | MOUNTING SIDE<br>BAĞLANTI | TORQUE<br>TORK<br>(Kgm / Nm) | POWER<br>GÜÇ<br>(Hp / Kw) | SPEED<br>DEVİR<br>(RPM) | RATIO<br>ORAN |
|---|---|---|---|---|---|---|---|
| 50123311P0 | PNEUMATIC<br>PNÖMATİK | UNI | REAR<br>KUYRUK | 22,4 Kgm<br>219,7 Nm | 20 Hp<br>14,9 Kw | 650 | 1:1,12 |
| 50123321P0 | | ISO ADAPTER<br>ADAPTÖRLÜ ISO | | | | | |
| 50123331P0 | | FLANGE<br>FLANŞLI | | | | | |
| 50123341P0 | | SHAFT<br>ŞAFTLI | | | | | |

| GEARBOX / ANA ŞANZIMANLAR | USED VEHICLES / KULLANILAN BAZI ARAÇLAR |
|---|---|
| G 56-6 | 815(4x2)-816-1215-1517 ATEGO (2006) ATEGO 918-1216 / ACCELO<br>MERCEDES-BENZ 1016 (BRAZIL) |



Seçeceğiniz pompanın dönüş yönü, P.T.O. dönüş yönü ile ters olmalıdır.
The rotation of the choosen pump has to be opposite with the rotation of P.T.O.

P.T.O. montaj edildikten sonra ana şanzıman yağını tamamlayın.
Fill the oil of the gear box after mounting the P.T.O.

# MERCEDES 608-808 SIDE UNI

## MERCEDES 608-808 YAN UNI



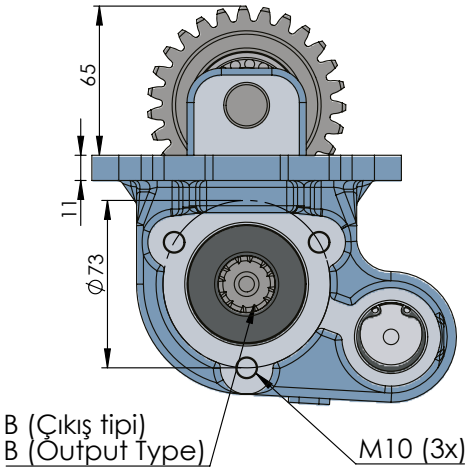


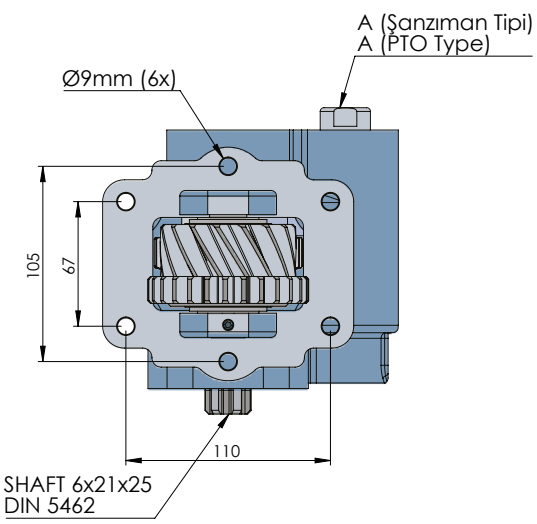


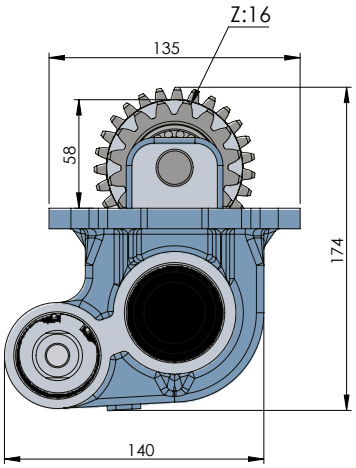


| CODE<br>KOD | TYPE<br>TİP (A) | MOUNTING TYPE<br>BAĞLANTI TİPİ (B) | MOUNTING SIDE<br>BAĞLANTI | TORQUE<br>TORK<br>(Kgm / Nm) | POWER<br>GÜÇ<br>(Hp / Kw) | SPEED<br>DEVİR<br>(RPM) | RATIO<br>ORAN |
|---|---|---|---|---|---|---|---|
| 50131512P0 | PNEUMATIC<br>PNÖMATİK | UNI | RIGHT SIDE<br>SAĞ YAN | 18,3 Kgm<br>179,5 Nm | 16,8 Hp<br>12,5 Kw | 750 | 1:1,12 |
| 50131522P0 | | ISO ADAPTER<br>ADAPTÖRLÜ ISO | | | | | |
| 50131532P0 | | FLANGE<br>FLANŞLI | | | | | |
| 50131542P0 | | SHAFT<br>ŞAFTLI | | | | | |

| GEARBOX / ANA ŞANZIMANLAR | USED VEHICLES / KULLANILAN BAZI ARAÇLAR |
|---|---|
| MERCEDES 307 - MERCEDES 309 - MERCEDES 328 - MERCEDES 508 - MERCEDES 608 D - MERCEDES 610 - MERCEDES 708 - MERCEDES 709 | 608 - 808 |

Seçeceğiniz pompanın dönüş yönü, P.T.O. dönüş yönü ile ters olmalıdır.
The rotation of the choosen pump has to be opposite to the rotation of P.T.O.

P.T.O. montaj edildikten sonra ana şanzıman yağını tamamlayın.
Fill the oil of the gear box after mounting the P.T.O.

# MERCEDES 352-1 SINGLE GEAR ISO

## MERCEDES 352-1 TEK DİŞLİ ISO

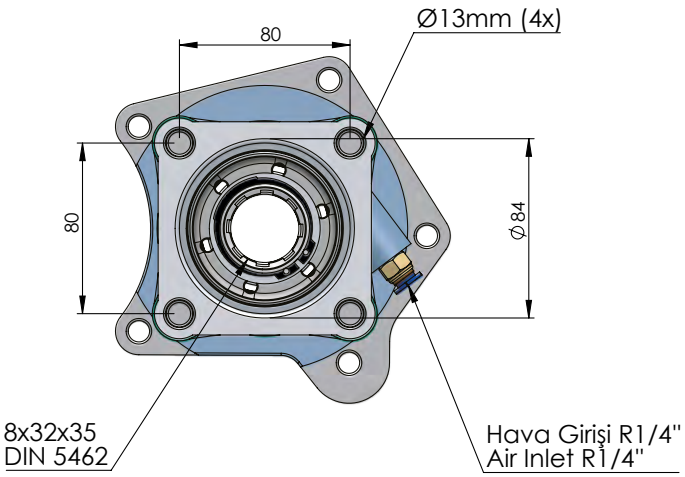




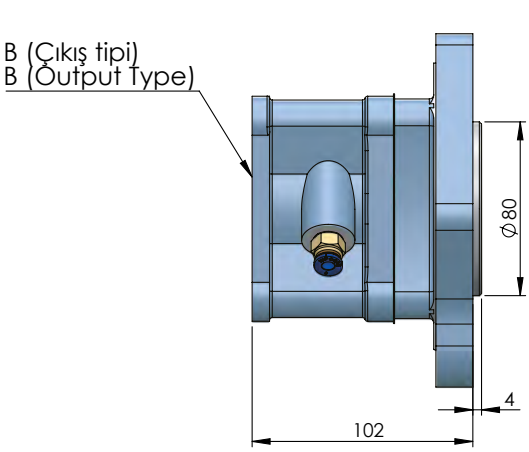


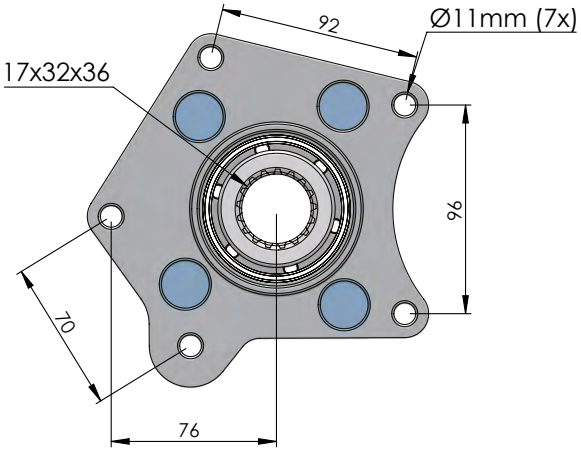


| CODE<br>KOD | TYPE<br>TİP (A) | MOUNTING TYPE<br>BAĞLANTI TİPİ (B) | MOUNTING SIDE<br>BAĞLANTI | TORQUE<br>TORK<br>(Kgm / Nm) | POWER<br>GÜÇ<br>(Hp / Kw) | SPEED<br>DEVİR<br>(RPM) | RATIO<br>ORAN |
|---|---|---|---|---|---|---|---|
| 50121312P0 | PNEUMATIC<br>PNÖMATİK | UNI ADAPTER<br>ADAPTÖRLÜ UNI | REAR<br>KUYRUK | 23 Kgm<br>255 Nm | 16 Hp<br>12 Kw | 500 | 1:1 |
| 50121322P0 | | ISO | | | | | |
| 50121332P0 | | FLANGE<br>ADAPTÖRLÜ FLANŞLI | | | | | |
| 50121342P0 | | SHAFT<br>ADAPTÖRLÜ ŞAFTLI | | | | | |

| GEARBOX / ANA ŞANZIMANLAR | USED VEHICLES / KULLANILAN BAZI ARAÇLAR |
|---|---|
| G3 / 32,36,40,45,50,55,60,61 ( 5/8,98-5/7,508-6/8,5-5/6,106 ) | 315-352-362-383-609-710-712-809-812-813-814-817-911-913-914-1017-1113-1114-1213-1216- 1318-1414-1618 Mercedes |

Seçeceğiniz pompanın dönüş yönü, P.T.O. dönüş yönü ile ters olmalıdır.
The rotation of the choosen pump has to be opposite with the rotation of P.T.O.

P.T.O. montaj edildikten sonra ana şanzıman yağını tamamlayın.
Fill the oil of the gear box after mounting the P.T.O.

# MERCEDES 352-2 DOUBLE GEAR UNI

## MERCEDES 352-2 AKTARMALI UNI



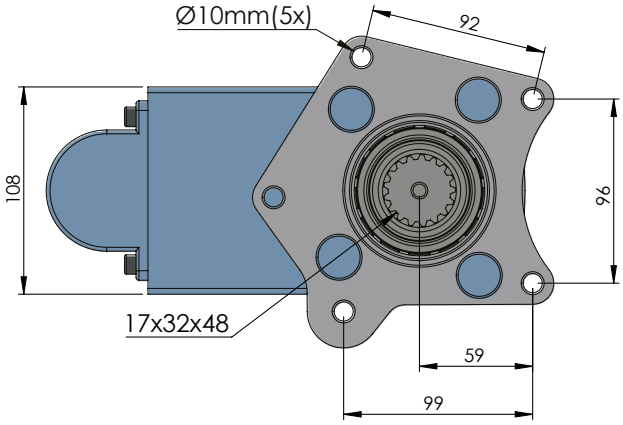


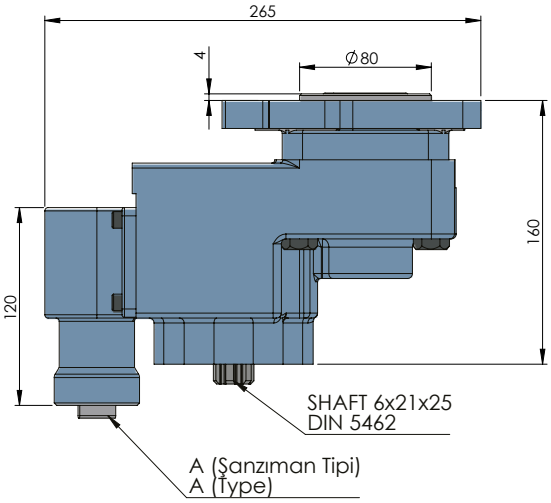


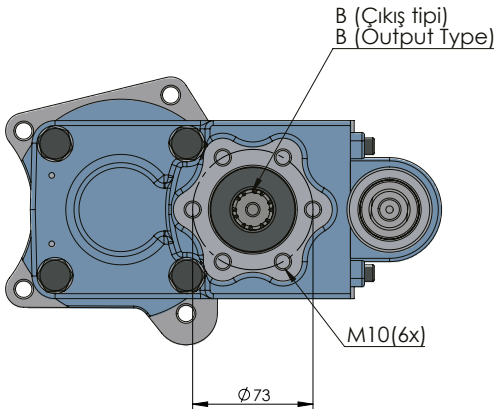


| CODE<br>KOD | TYPE<br>TİP (A) | MOUNTING TYPE<br>BAĞLANTI TİPİ (B) | MOUNTING SIDE<br>BAĞLANTI | TORQUE<br>TORK<br>(Kgm / Nm) | POWER<br>GÜÇ<br>(Hp / Kw) | SPEED<br>DEVİR<br>(RPM) | RATIO<br>ORAN |
|---|---|---|---|---|---|---|---|
| 50120311P0 | PNEUMATIC<br>PNÖMATİK | UNI | REAR<br>KUYRUK | 22,4 Kgm<br>219,7 Nm | 20 Hp<br>14,9 Kw | 650 | 1:1,12 |
| 50120321P0 | | ISO ADAPTER<br>ADAPTÖRLÜ ISO | | | | | |
| 50120331P0 | | FLANGE<br>FLANŞLI | | | | | |
| 50120341P0 | | SHAFT<br>ŞAFTLI | | | | | |

| GEARBOX / ANA ŞANZIMANLAR | USED VEHICLES / KULLANILAN BAZI ARAÇLAR |
|---|---|
| G3 / 32,36,40,45,50,55,60,61 ( 5/8,98-5/7,508-6/8,5-5/6,106 ) | 315-352-362-383-609-710-712-809-812-813-814-817-911-913-914-1017-1113-1114-1213-1216- 1318-1414-1618 Mercedes |



Seçeceğiniz pompanın dönüş yönü, P.T.O. dönüş yönü ile ters olmalıdır.
The rotation of the choosen pump has to be opposite to the rotation of P.T.O.

P.T.O. montaj edildikten sonra ana şanzıman yağını tamamlayın.
Fill the oil of the gear box after mounting the P.T.O.

# MERCEDES G4-1 SINGLE GEAR ISO

## MERCEDES G4-1 TEK DİŞLİ ISO

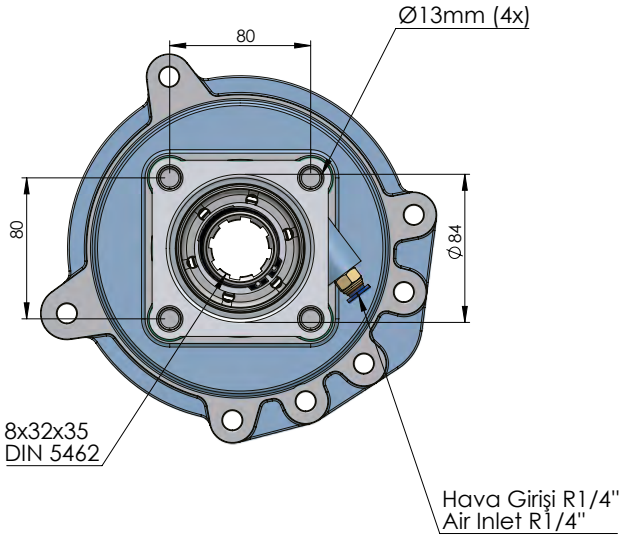




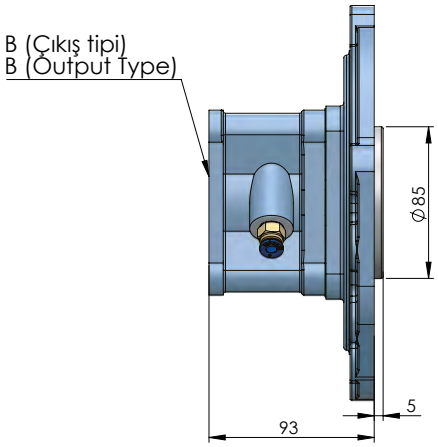


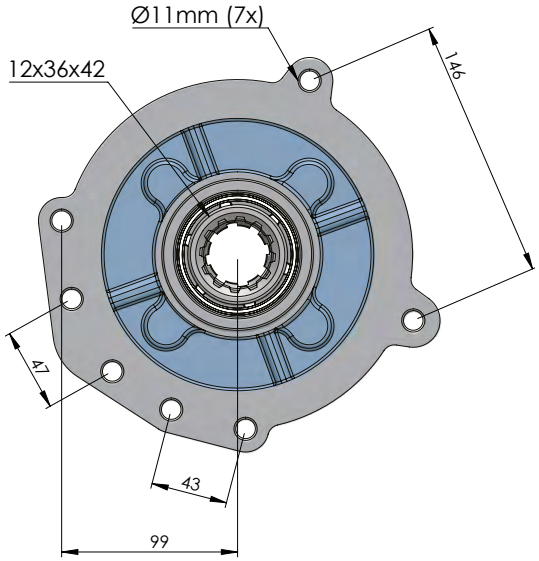


| CODE<br>KOD | TYPE<br>TİP (A) | MOUNTING TYPE<br>BAĞLANTI TİPİ (B) | MOUNTING SIDE<br>BAĞLANTI | TORQUE<br>TORK<br>(Kgm / Nm) | POWER<br>GÜÇ<br>(Hp / Kw) | SPEED<br>DEVİR<br>(RPM) | RATIO<br>ORAN |
|---|---|---|---|---|---|---|---|
| 50129312P0 | PNEUMATIC<br>PNÖMATİK | UNI ADAPTER<br>ADAPTÖRLÜ UNI | REAR<br>KUYRUK | 23,5 Kgm<br>230,5 Nm | 16 Hp<br>12 Kw | 500 | 1:1 |
| 50129322P0 | | ISO | | | | | |
| 50129332P0 | | FLANGE<br>ADAPTÖRLÜ FLANŞLI | | | | | |
| 50129342P0 | | SHAFT<br>ADAPTÖRLÜ ŞAFTLI | | | | | |

| GEARBOX / ANA ŞANZIMANLAR | USED VEHICLES / KULLANILAN BAZI ARAÇLAR |
|---|---|
| G4 - GV / 4 65,90,95,110 | 1222-1224-1417-1419-1617-1619-1620-1722-1733-1817-1820-1821-1827-1831-1922-2232-2517 -2521-2527-3027-1424-1628-1820-1824-1929-1935-1948-2024-2222-2426-2524-2622-2629-2635<br>MERCEDES-BENZ |

Seçeceğiniz pompanın dönüş yönü, P.T.O. dönüş yönü ile ters olmalıdır.
The rotation of the choosen pump has to be opposite with the rotation of P.T.O.

P.T.O. montaj edildikten sonra ana şanzıman yağını tamamlayın.
Fill the oil of the gear box after mounting the P.T.O.

# MERCEDES G4-2 DOUBLE GEAR UNI

## MERCEDES G4-2 AKTARMALI UNI



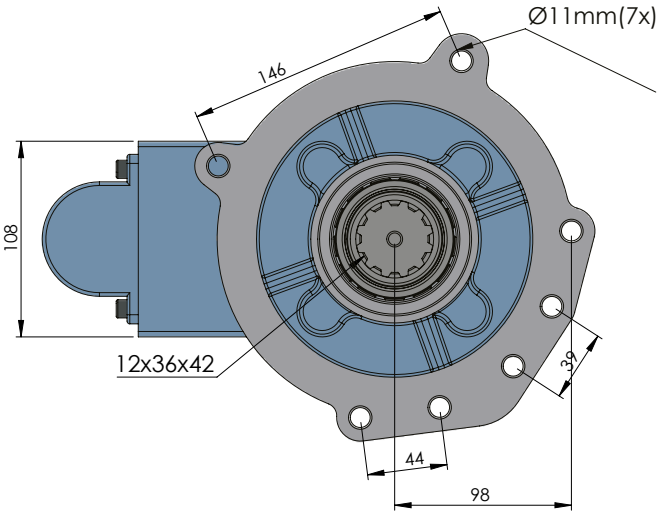


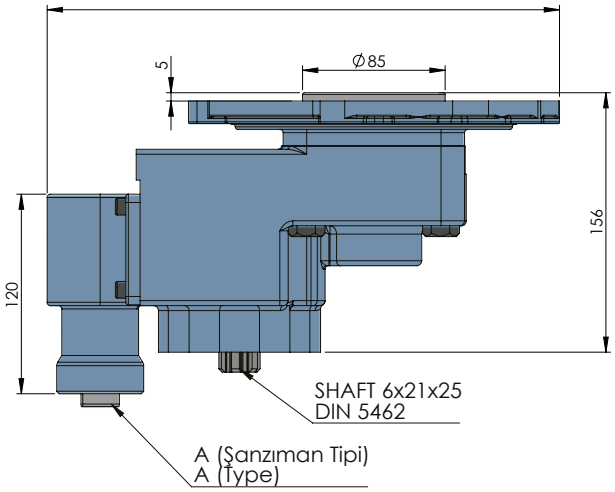


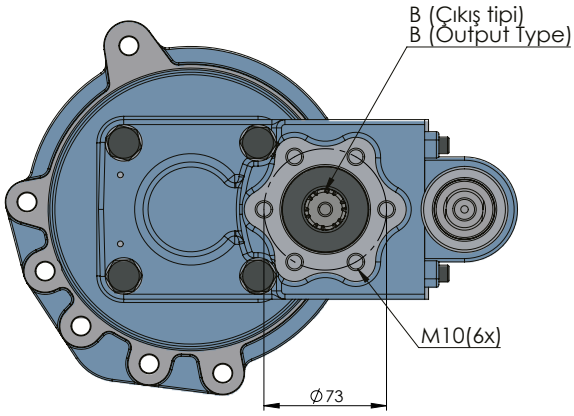


| CODE<br>KOD | TYPE<br>TİP (A) | MOUNTING TYPE<br>BAĞLANTI TİPİ (B) | MOUNTING SIDE<br>BAĞLANTI | TORQUE<br>TORK<br>(Kgm / Nm) | POWER<br>GÜÇ<br>(Hp / Kw) | SPEED<br>DEVİR<br>(RPM) | RATIO<br>ORAN |
|---|---|---|---|---|---|---|---|
| 50129311P0 | PNEUMATIC<br>PNÖMATİK | UNİ | REAR<br>KUYRUK | 22,4 Kgm<br>219,7 Nm | 20 Hp<br>14,9 Kw | 650 | 1:1,12 |
| 50129321P0 | | ISO ADAPTER<br>ADAPTÖRLÜ ISO | | | | | |
| 50129331P0 | | FLANGE<br>FLANŞLI | | | | | |
| 50129341P0 | | SHAFT<br>ŞAFTLI | | | | | |

| GEARBOX / ANA ŞANZIMANLAR | USED VEHICLES / KULLANILAN BAZI ARAÇLAR |
|---|---|
| G4 - GV / 4 65,90,95,110 | 1222-1224-1417-1419-1617-1619-1620-1722-1733-1817-1820-1821-1827-1831-1922-2232-2517 -2521-2527-3027-1424-1628-1820-1824-1929-1935-1948-2024-2222-2426-2524-2622-2629-2635<br>MERCEDES-BENZ |



Seçeceğiniz pompanın dönüş yönü, P.T.O. dönüş yönü ile ters olmalıdır.
The rotation of the choosen pump has to be opposite to the rotation of P.T.O.

P.T.O. montaj edildikten sonra ana şanzıman yağını tamamlayın.
Fill the oil of the gear box after mounting the P.T.O.

# MERCEDES UNIMOG DOUBLE GEAR ISO

## MERCEDES UNIMOG AKTARMALI ISO

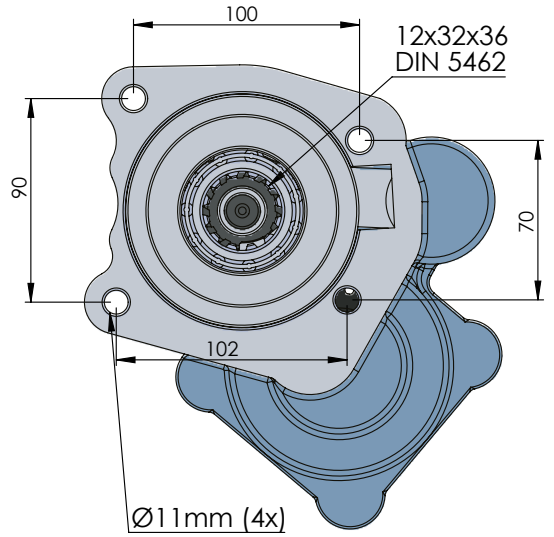




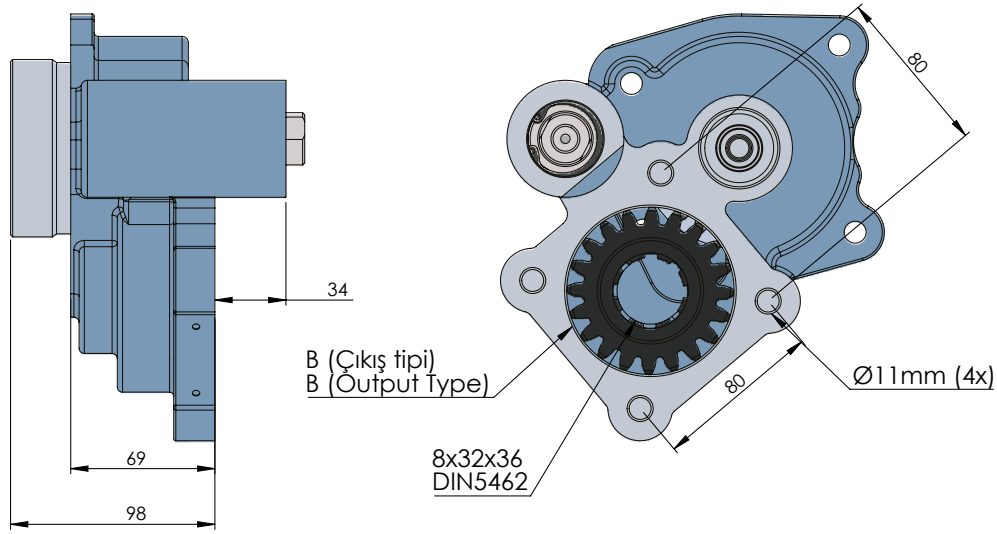


| CODE<br>KOD | TYPE<br>TİP (A) | MOUNTING TYPE<br>BAĞLANTI TİPİ (B) | MOUNTING SIDE<br>BAĞLANTI | TORQUE<br>TORK<br>(Kgm / Nm) | POWER<br>GÜÇ<br>(Hp / Kw) | SPEED<br>DEVİR<br>(RPM) | RATIO<br>ORAN |
|---|---|---|---|---|---|---|---|
| 50130311P0 | PNEUMATIC<br>PNÖMATİK | UNI ADAPTER<br>ADAPTÖRLÜ UNI | REAR<br>KUYRUK | 22,4 Kgm<br>219,7 Nm | 20 Hp<br>14,9 Kw | 650 | 1:1,2 |
| 50130321P0 | | İSO | | | | | |
| 50130331P0 | | FLANGE<br>ADAPTÖRLÜ FLANŞLI | | | | | |
| 50130341P0 | | SHAFT<br>ADAPTÖRLÜ ŞAFTLI | | | | | |

| GEARBOX / ANA ŞANZIMANLAR | USED VEHICLES / KULLANILAN BAZI ARAÇLAR |
|---|---|
| G 100-12 G 100-12 / G 140-8 | 1528-1823-1828-1924-2523-2528-2623-2628-2832-3224-3228 AXOR / 2632 ACTROS 823-923- 1023-1223-1225-1228-1323-1328-1523-1528-1828-2528-2628 ATEGO |



Seçeceğiniz pompanın dönüş yönü, P.T.O. dönüş yönü ile ters olmalıdır.
The rotation of the choosen pump has to be opposite with the rotation of P.T.O.

P.T.O. montaj edildikten sonra ana şanzıman yağını tamamlayın.
Fill the oil of the gear box after mounting the P.T.O.

# ZF-1 SINGLE GEAR ISO

## ZF-1 KUYRUK TEK DİŞLİ ISO



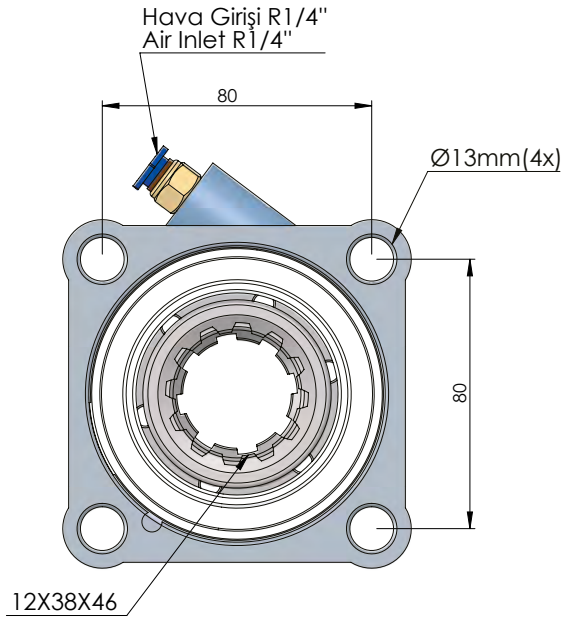


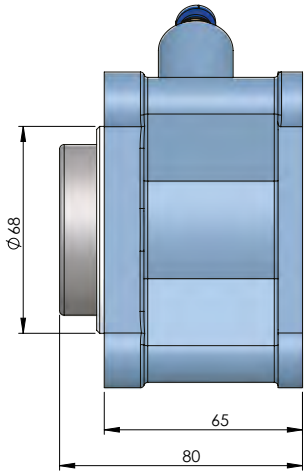


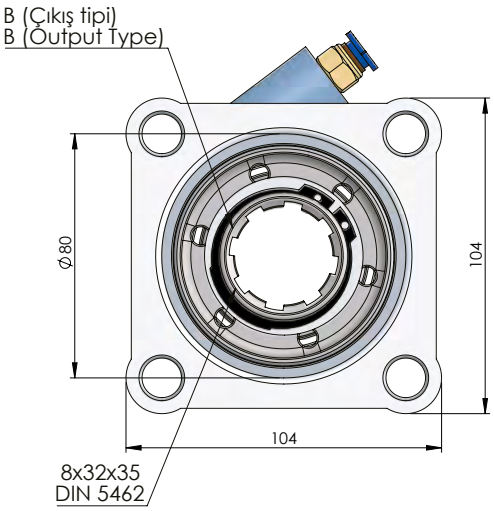


| CODE<br>KOD | TYPE<br>TİP (A) | MOUNTING TYPE<br>BAĞLANTI TİPİ (B) | MOUNTING SIDE<br>BAĞLANTI | TORQUE<br>TORK<br>(Kgm / Nm) | POWER<br>GÜÇ<br>(Hp / Kw) | SPEED<br>DEVİR<br>(RPM) | RATIO<br>ORAN |
|---|---|---|---|---|---|---|---|
| 50210312P0 | PNEUMATIC<br>PNÖMATİK | UNI ADAPTER<br>ADAPTÖRLÜ UNI | REAR<br>KUYRUK | 23 Kgm<br>255 Nm | 16 Hp<br>12 Kw | 500 | 1:1 |
| 50210322P0 | | ISO | | | | | |
| 50210332P0 | | FLANGE<br>ADAPTÖRLÜ FLANŞLI | | | | | |
| 50210342P0 | | SHAFT<br>ADAPTÖRLÜ ŞAFTLI | | | | | |

| GEARBOX / ANA ŞANZIMANLAR | USED VEHICLES / KULLANILAN BAZI ARAÇLAR |
|---|---|
| ZF44, ZF6S800, ZF6S1000, ZFS635, ZFS642, ZFS650, ZFS655, ZFS665, ZFS670, ZFS680, ZFS690,ZFS550, ZFS590, GV90, VOLVO2855/ZF S5/AK/6S-120-111-110-92 GP ZF S5/AK/ 6S-90-80-70-66-65-55-50-42-36-35 ZF AK 6 80 / AK 6 90 / S6 80 / S6 90 | MAN/MERCEDES/BMC PROFESYONEL/FORD CARGO/CHRYSLER HINO/DODGE/ FARGO/ HYUNDAI/ASTRAIVECO/DAF/DAEWOO/RENAULT/EBRO/GUY/AVIA/ SAURER/SISU/STEYR |



Seçeceğiniz pompanın dönüş yönü, P.T.O. dönüş yönü ile ters olmalıdır.
The rotation of the choosen pump has to be opposite to the rotation of P.T.O.

P.T.O. montaj edildikten sonra ana şanzıman yağını tamamlayın.
Fill the oil of the gear box after mounting the P.T.O.

# ZF-1 SINGLE GEAR WITH SWITCH ISO

## ZF-1 KUYRUK TEK DİŞLİ MÜŞÜRLÜ ISO

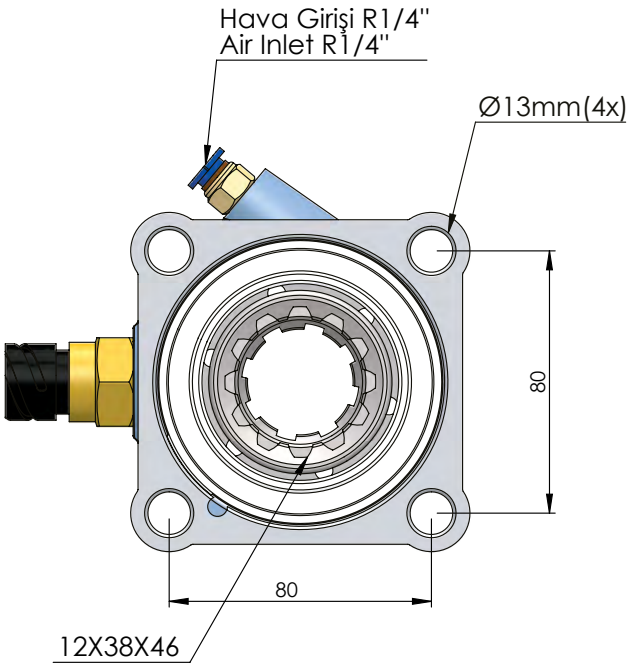




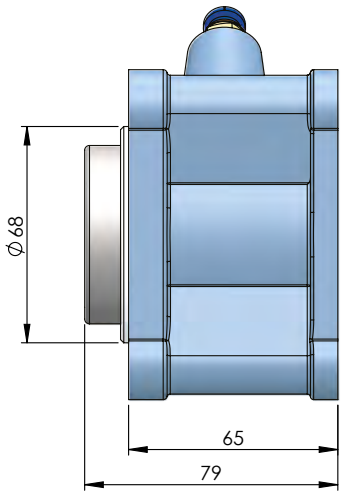


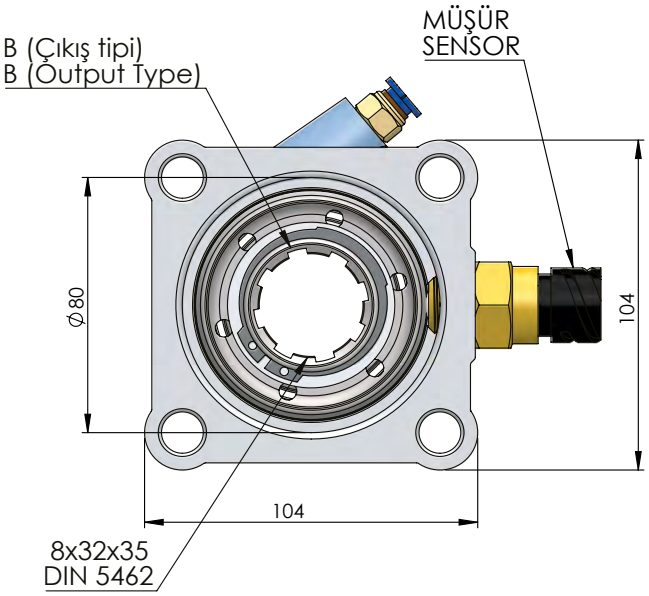


| CODE<br>KOD | TYPE<br>TİP (A) | MOUNTING TYPE<br>BAĞLANTI TİPİ (B) | MOUNTING SIDE<br>BAĞLANTI | TORQUE<br>TORK<br>(Kgm / Nm) | POWER<br>GÜÇ<br>(Hp / Kw) | SPEED<br>DEVİR<br>(RPM) | RATIO<br>ORAN |
|---|---|---|---|---|---|---|---|
| 50210312P1 | PNEUMATIC<br>PNÖMATİK | UNI ADAPTER<br>ADAPTÖRLÜ UNI | REAR<br>KUYRUK | 23 Kgm<br>255 Nm | 16 Hp<br>12 Kw | 500 | 1:1 |
| 50210322P1 | | ISO | | | | | |
| 50210332P1 | | FLANGE<br>ADAPTÖRLÜ FLANŞLI | | | | | |
| 50210342P1 | | SHAFT<br>ADAPTÖRLÜ ŞAFTLI | | | | | |

| GEARBOX / ANA ŞANZIMANLAR | USED VEHICLES / KULLANILAN BAZI ARAÇLAR |
|---|---|
| ZF44, ZF6S800, ZF6S1000, ZFS635, ZFS642, ZFS650, ZFS655, ZFS665, ZFS670, ZFS680, ZFS690,ZFS550, ZFS590, GV90, VOLVO2855/ZF S5/AK/6S-120-111-110-92 GP ZF S5/AK/ 6S-90-80-70-66-65-55-50-42-36-35 ZF AK 6 80 / AK 6 90 / S6 80 / S6 90 | MAN/MERCEDES/BMC PROFESYONEL/FORD CARGO/CHRYSLER HINO/ DODGE/FARGO/ HYUNDAI/ASTRAIVECO/DAF/DAEWOO/RENAULT/EBRO/ GUY/AVIA/SAURER/SISU/STEYR |

Seçeceğiniz pompanın dönüş yönü, P.T.O. dönüş yönü ile ters olmalıdır.
The rotation of the choosen pump has to be opposite with the rotation of P.T.O.

P.T.O. montaj edildikten sonra ana şanzıman yağını tamamlayın.
Fill the oil of the gear box after mounting the P.T.O.

# ZF-1 SINGLE GEAR ALUMINUM ISO

## ZF 1 ALÜMİNYUM



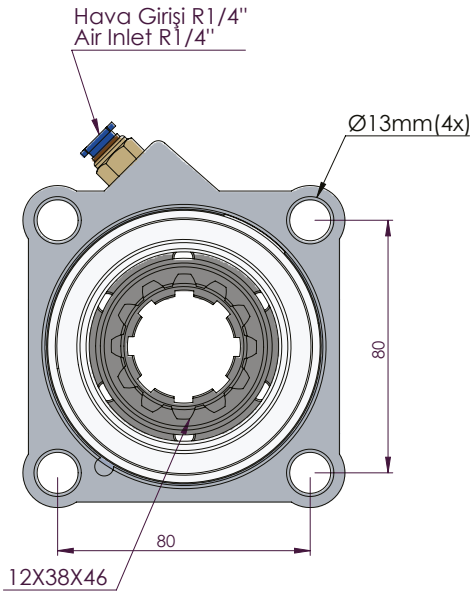


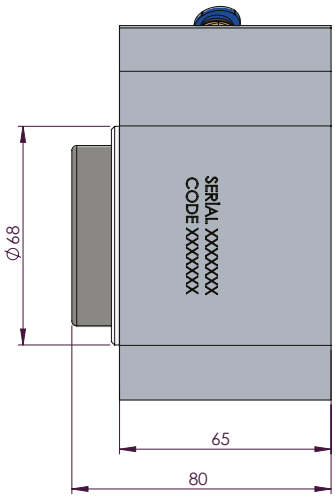


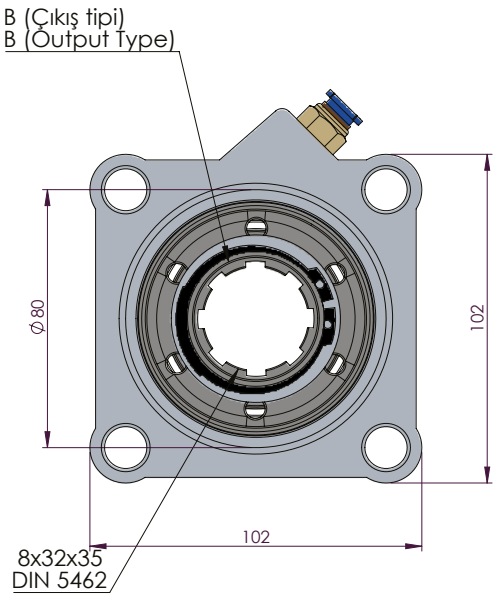


| CODE<br>KOD | TYPE<br>TİP (A) | MOUNTING TYPE<br>BAĞLANTI TİPİ (B) | MOUNTING SIDE<br>BAĞLANTI | TORQUE<br>TORK<br>(Kgm / Nm) | POWER<br>GÜÇ<br>(Hp / Kw) | SPEED<br>DEVİR<br>(RPM) | RATIO<br>ORAN |
|---|---|---|---|---|---|---|---|
| 50213312P0 | PNEUMATIC<br>PNÖMATİK | UNI ADAPTER<br>ADAPTÖRLÜ UNI | REAR<br>KUYRUK | 23 Kgm<br>255 Nm | 16 Hp<br>12 Kw | 500 | 1:1 |
| 50213322P0 | | ISO | | | | | |
| 50213332P0 | | FLANGE<br>ADAPTÖRLÜ FLANŞLI | | | | | |
| 50213342P0 | | SHAFT<br>ADAPTÖRLÜ ŞAFTLI | | | | | |

| GEARBOX / ANA ŞANZIMANLAR | USED VEHICLES / KULLANILAN BAZI ARAÇLAR |
|---|---|
| ZF44, ZF6S800, ZF6S1000, ZFS635, ZFS642, ZFS650, ZFS655, ZFS665, ZFS670, ZFS680, ZFS690,ZFS550, ZFS590, GV90, VOLVO2855/ZF S5/AK/6S-120-111-110-92 GP ZF S5/AK/ 6S-90-80-70-66-65-55-50-42-36-35 ZF AK 6 80 / AK 6 90 / S6 80 / S6 90 | MAN/MERCEDES/BMC PROFESYONEL/FORD CARGO/CHRYSLER HINO/ DODGE/FARGO/ HYUNDAI/ASTRAIVECO/DAF/DAEWOO/RENAULT/EBRO/ GUY/AVIA/SAURER/SISU/STEYR |



Seçeceğiniz pompanın dönüş yönü, P.T.O. dönüş yönü ile ters olmalıdır.
The rotation of the choosen pump has to be opposite to the rotation of P.T.O.

P.T.O. montaj edildikten sonra ana şanzıman yağını tamamlayın.
Fill the oil of the gear box after mounting the P.T.O.

# ZF-2 DOUBLE GEAR ISO

## ZF-2 AKTARMALI KUYRUK ÇİFT DİŞLİ

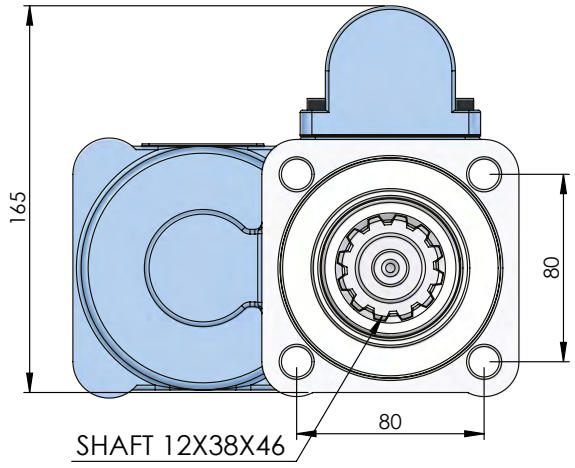




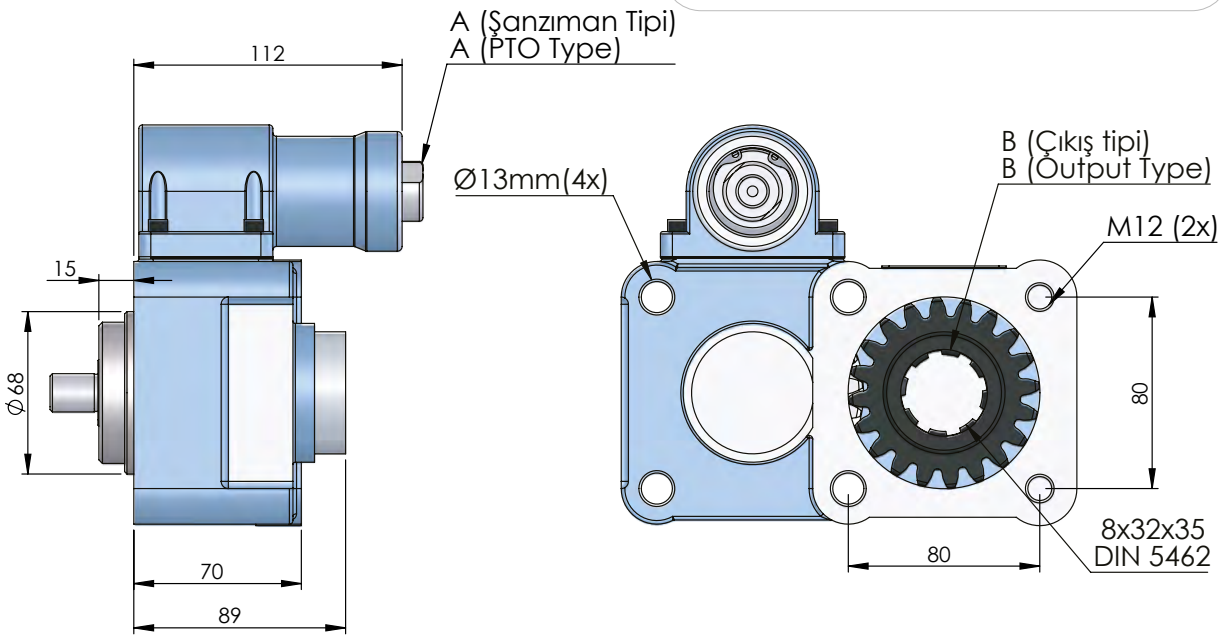


| CODE<br>KOD | TYPE<br>TİP (A) | MOUNTING TYPE<br>BAĞLANTI TİPİ (B) | MOUNTING SIDE<br>BAĞLANTI | TORQUE<br>TORK<br>(Kgm / Nm) | POWER<br>GÜÇ<br>(Hp / Kw) | SPEED<br>DEVİR<br>(RPM) | RATIO<br>ORAN |
|---|---|---|---|---|---|---|---|
| 50211311P0 | PNEUMATIC<br>PNÖMATİK | UNI ADAPTER<br>ADAPTÖRLÜ UNI | REAR<br>KUYRUK | 26,5 Kgm<br>260 Nm | 24,5 Hp<br>18,3 Kw | 675 | 1:1,2 |
| 50211322P0 | | ISO | | | | | |
| 50211332P0 | | FLANGE<br>ADAPTÖRLÜ FLANŞLI | | | | | |
| 50211342P0 | | SHAFT<br>ADAPTÖRLÜ ŞAFTLI | | | | | |

| GEARBOX / ANA ŞANZIMANLAR | USED VEHICLES / KULLANILAN BAZI ARAÇLAR |
|---|---|
| ZF44, ZF6S800, ZF6S1000, ZFS635, ZFS642, ZFS650, ZFS655, ZFS665, ZFS670, ZFS680, ZFS690,ZFS550, ZFS590, GV90, VOLVO2855/ZF S5/AK/6S-120-111-110-92 GP ZF S5/AK/ 6S-90-80-70-66-65-55-50-42-36-35 ZF AK 6 80 / AK 6 90 / S6 80 / S6 90 | MAN/MERCEDES/BMC PROFESYONEL/FORD CARGO/CHRYSLER HINO/ DODGE/FARGO/ HYUNDAI/ASTRAIVECO/DAF/DAEWOO/RENAULT/EBRO/ GUY/AVIA/SAURER/SISU/STEYR |

Seçeceğiniz pompanın dönüş yönü, P.T.O. dönüş yönü ile ters olmalıdır.
The rotation of the choosen pump has to be opposite with the rotation of P.T.O.

P.T.O. montaj edildikten sonra ana şanzıman yağını tamamlayın.
Fill the oil of the gear box after mounting the P.T.O.

# ZF-5 BENT AXIS HELIX DOUBLE GEAR ISO

## ZF-5 EĞİK HAVA YASTIKLI HELİS ÇİFT DİŞLİ



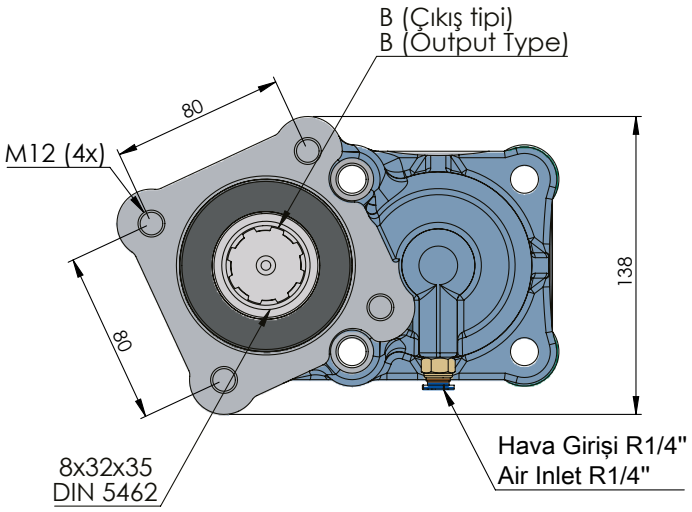


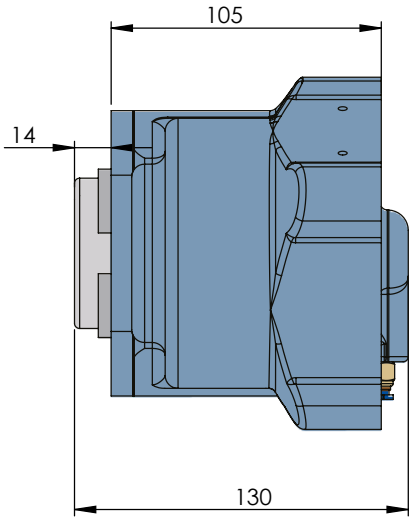


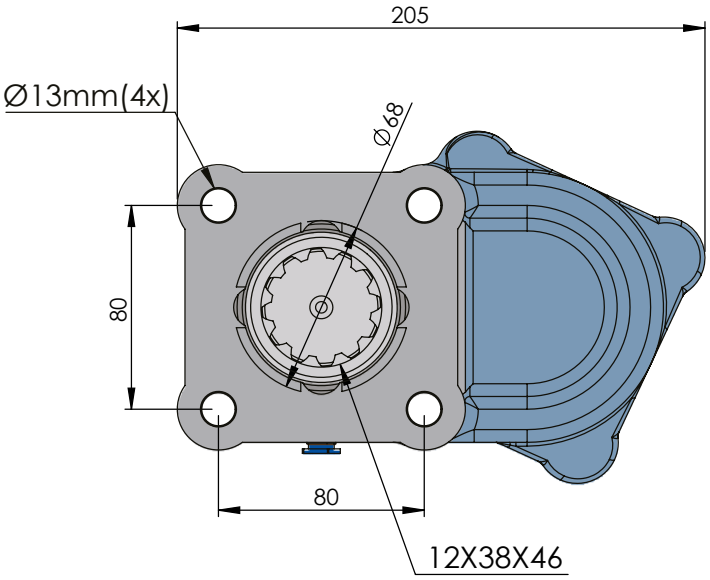


| CODE<br>KOD | TYPE<br>TİP (A) | MOUNTING TYPE<br>BAĞLANTI TİPİ (B) | MOUNTING SIDE<br>BAĞLANTI | TORQUE<br>TORK<br>(Kgm / Nm) | POWER<br>GÜÇ<br>(Hp / Kw) | SPEED<br>DEVİR<br>(RPM) | RATIO<br>ORAN |
|---|---|---|---|---|---|---|---|
| 50241311P0 | PNEUMATIC<br>PNÖMATİK | UNI ADAPTER<br>ADAPTÖRLÜ UNI | REAR<br>KUYRUK | 26,5 Kgm<br>260 Nm | 24,5 Hp<br>18,3 Kw | 650 | 1:1,21 |
| 50241321P0 | | ISO | | | | | |
| 50241331P0 | | FLANGE<br>ADAPTÖRLÜ FLANŞLI | | | | | |
| 50241341P0 | | SHAFT<br>ADAPTÖRLÜ ŞAFTLI | | | | | |

| GEARBOX / ANA ŞANZIMANLAR | USED VEHICLES / KULLANILAN BAZI ARAÇLAR |
|---|---|
| ZF44, ZF6S800, ZF6S1000, ZFS635, ZFS642, ZFS650, ZFS655, ZFS665, ZFS670, ZFS680, ZFS690,ZFS550, ZFS590, GV90, VOLVO2855/ZF S5/AK/6S-120-111-110-92 GP ZF S5/AK/ 6S-90-80-70-66-65-55-50-42-36-35 ZF AK 6 80 / AK 6 90 / S6 80 / S6 90 | MAN/MERCEDES/BMC PROFESYONEL/FORD CARGO/CHRYSLER HINO/ DODGE/FARGO/ HYUNDAI/ASTRAIVECO/DAF/DAEWOO/RENAULT/EBRO/ GUY/AVIA/SAURER/SISU/STEYR |



Seçeceğiniz pompanın dönüş yönü, P.T.O. dönüş yönü ile ters olmalıdır.
The rotation of the choosen pump has to be opposite to the rotation of P.T.O.

P.T.O. montaj edildikten sonra ana şanzıman yağını tamamlayın.
Fill the oil of the gear box after mounting the P.T.O.

# ZF-6 DOUBLE GEAR UNI

## ZF-6 ÇİFT DİŞLİ UNI

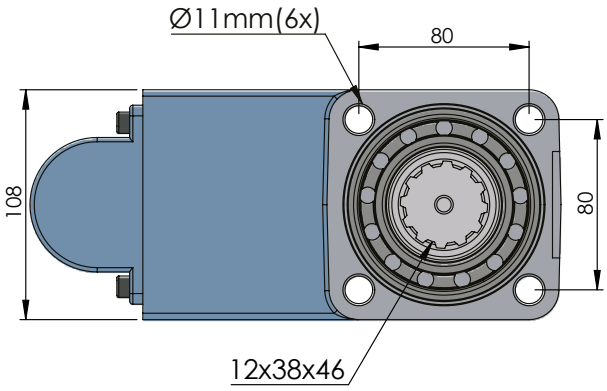




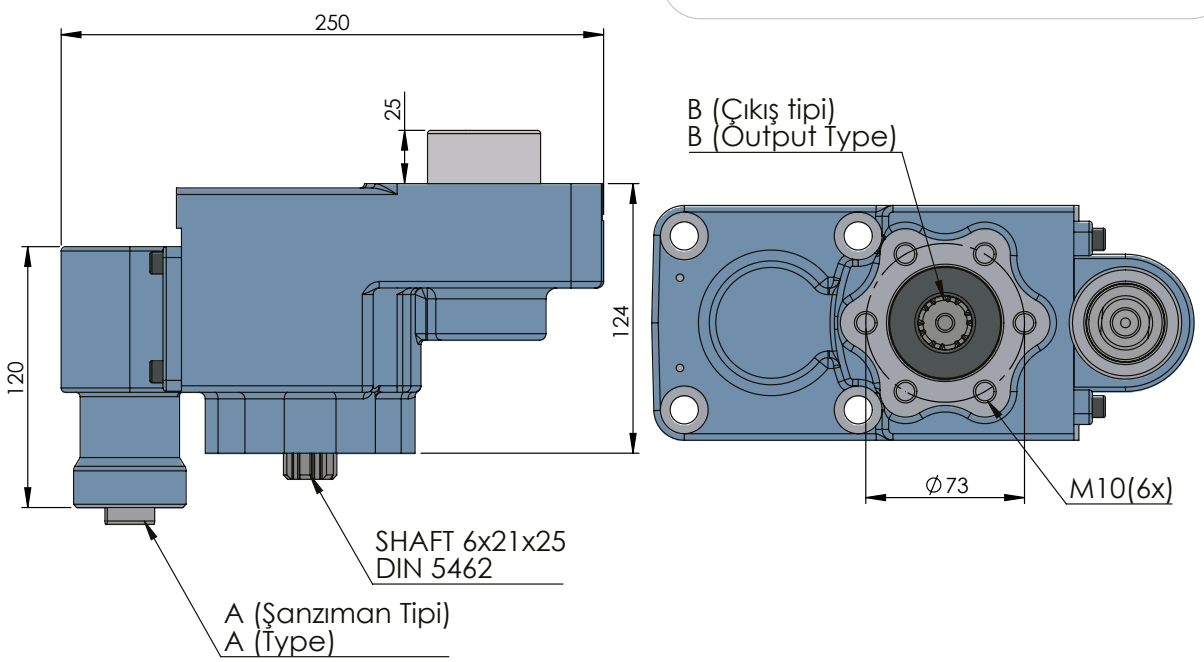


| CODE<br>KOD | TYPE<br>TİP (A) | MOUNTING TYPE<br>BAĞLANTI TİPİ (B) | MOUNTING SIDE<br>BAĞLANTI | TORQUE<br>TORK<br>(Kgm / Nm) | POWER<br>GÜÇ<br>(Hp / Kw) | SPEED<br>DEVİR<br>(RPM) | RATIO<br>ORAN |
|---|---|---|---|---|---|---|---|
| 50211511P0 | PNEUMATIC<br>PNÖMATİK | UNI | REAR<br>KUYRUK | 22,4 Kgm<br>219,7 Nm | 20 Hp<br>14,9 Kw | 650 | 1:1,12 |
| 50211521P0 | | ISO ADAPTER<br>ADAPTÖRLÜ ISO | | | | | |
| 50211531P0 | | FLANGE<br>FLANŞLI | | | | | |
| 50211541P0 | | SHAFT<br>ŞAFTLI | | | | | |

| GEARBOX / ANA ŞANZIMANLAR | USED VEHICLES / KULLANILAN BAZI ARAÇLAR |
|---|---|
| ZF44, ZF6S800, ZF6S1000, ZFS635, ZFS642, ZFS650, ZFS655, ZFS665, ZFS670, ZFS680, ZFS690,ZFS550, ZFS590, GV90, VOLVO2855/ZF S5/AK/6S-120-111-110-92 GP ZF S5/AK/ 6S-90-80-70-66-65-55-50-42-36-35 ZF AK 6 80 / AK 6 90 / S6 80 / S6 90 | MAN/MERCEDES/BMC PROFESYONEL/FORD CARGO/CHRYSLER HINO/ DODGE/FARGO/ HYUNDAI/ASTRAIVECO/DAF/DAEWOO/RENAULT/EBRO/ GUY/AVIA/SAURER/SISU/STEYR |

# ZF DOUBLE OUTLET ISO

## ZF ÇİFT ÇIKIŞLI AKTARMALI ISO



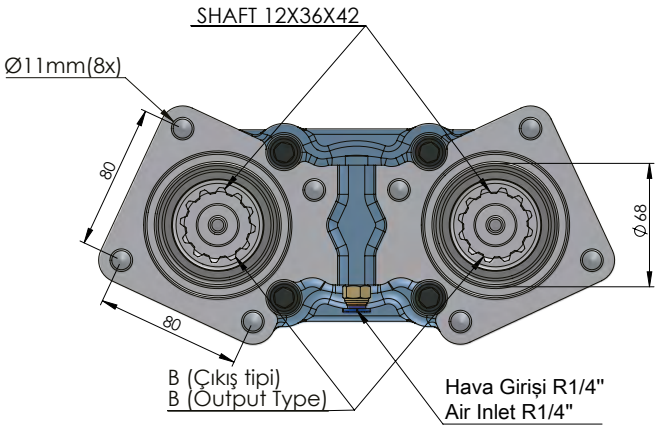


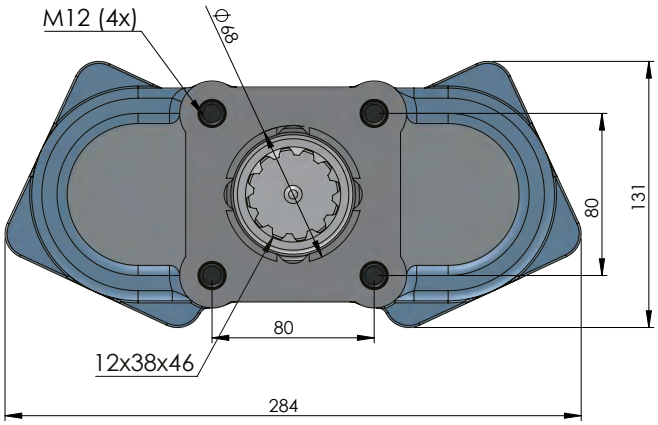


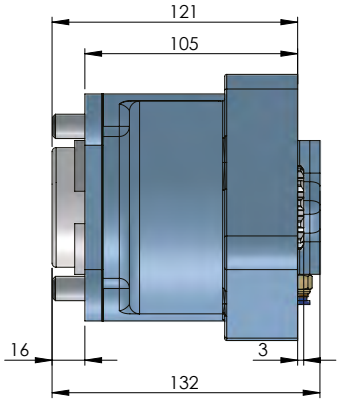


| CODE<br>KOD | TYPE<br>TİP (A) | MOUNTING TYPE<br>BAĞLANTI TİPİ (B) | MOUNTING SIDE<br>BAĞLANTI | TORQUE<br>TORK<br>(Kgm / Nm) | POWER<br>GÜÇ<br>(Hp / Kw) | SPEED<br>DEVİR<br>(RPM) | RATIO<br>ORAN |
|---|---|---|---|---|---|---|---|
| 50290311P0 | PNEUMATIC<br>PNÖMATİK | UNI ADAPTER<br>ADAPTÖRLÜ UNI | REAR<br>KUYRUK | 21 Kgm<br>255 Nm | 19 Hp<br>14 Kw | 675 | 1:1.2 |
| 50290321P0 | | ISO | | | | | |
| 50290331P0 | | FLANGE<br>ADAPTÖRLÜ FLANŞLI | | | | | |
| 50290341P0 | | SHAFT<br>ADAPTÖRLÜ ŞAFTLI | | | | | |

| GEARBOX / ANA ŞANZIMANLAR | USED VEHICLES / KULLANILAN BAZI ARAÇLAR |
|---|---|
| ZF44, ZF6S800, ZF6S1000, ZFS635, ZFS642, ZFS650, ZFS655, ZFS665, ZFS670, ZFS680, ZFS690,ZFS550, ZFS590, GV90, VOLVO2855/ZF S5/AK/6S-120-111-110-92 GP ZF S5/AK/ 6S-90-80-70-66-65-55-50-42-36-35 ZF AK 6 80 / AK 6 90 / S6 80 / S6 90 | MAN/MERCEDES/BMC PROFESYONEL/FORD CARGO/CHRYSLER HINO/ DODGE/FARGO/ HYUNDAI/ASTRAIVECO/DAF/DAEWOO/RENAULT/EBRO/ GUY/AVIA/SAURER/SISU/STEYR |



Seçeceğiniz pompanın dönüş yönü, P.T.O. dönüş yönü ile ters olmalıdır.
The rotation of the choosen pump has to be opposite to the rotation of P.T.O.

P.T.O. montaj edildikten sonra ana şanzıman yağını tamamlayın.
Fill the oil of the gear box after mounting the P.T.O.

# ZF 6S 300 SIDE UNI

## ZF 6S 300 YAN UNI

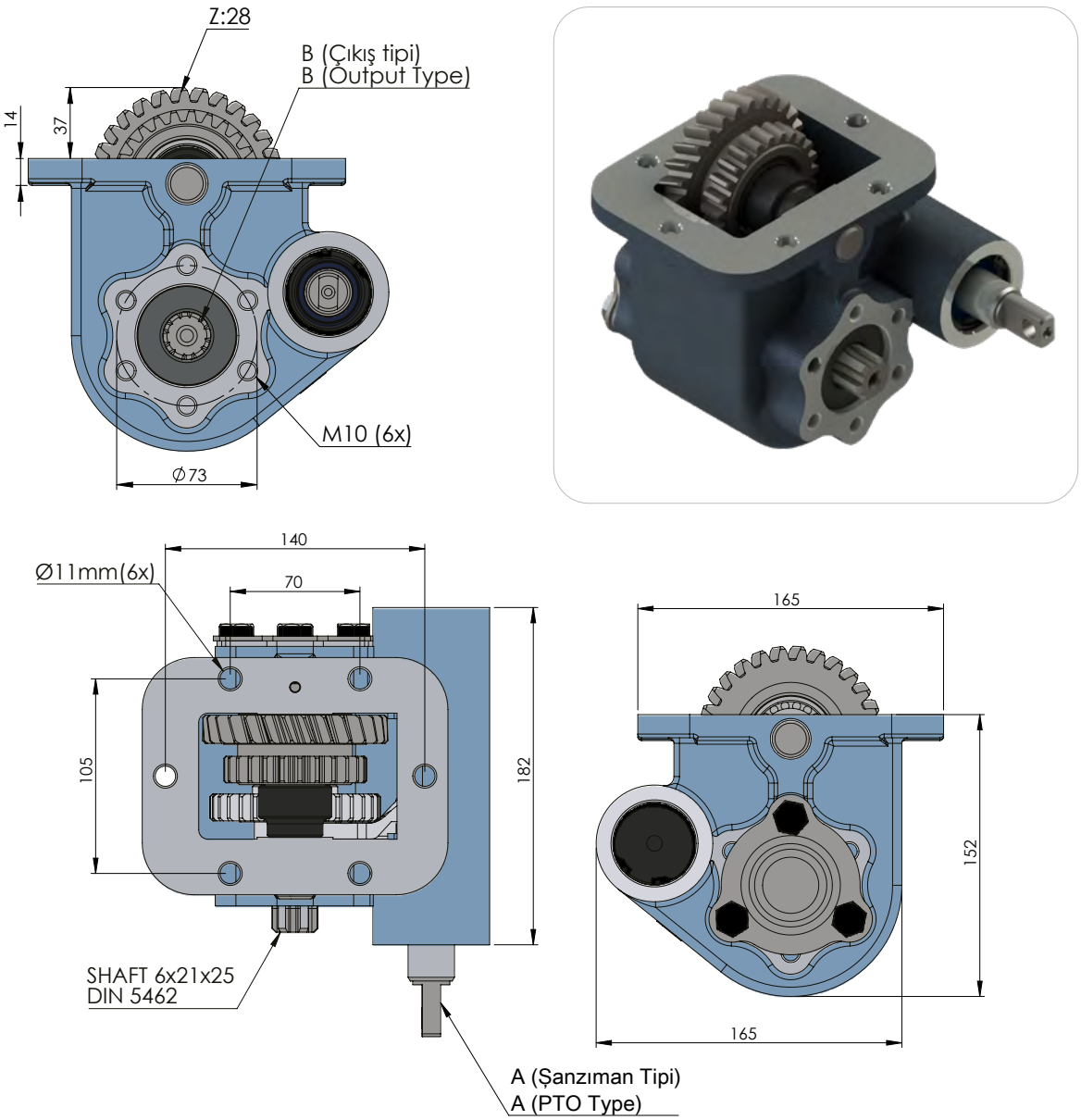


| CODE<br>KOD | TYPE<br>TİP (A) | MOUNTING TYPE<br>BAĞLANTI TİPİ (B) | MOUNTING SIDE<br>BAĞLANTI | TORQUE<br>TORK<br>(Kgm / Nm) | POWER<br>GÜÇ<br>(Hp / Kw) | SPEED<br>DEVİR<br>(RPM) | RATIO<br>ORAN |
|---|---|---|---|---|---|---|---|
| 50215512M0 | MEKANİK<br>MECHANIC | UNI | SIDE<br>YAN | 23 Kgm<br>238 Nm | 30 Hp<br>23 Kw | 1000 | 1:0.8 |
| 50215522M0 | | ISO ADAPTER<br>ADAPTÖRLÜ ISO | | | | | |
| 50215532M0 | | FLANGE<br>FLANŞLI | | | | | |
| 50215542M0 | | SHAFT<br>ŞAFTLI | | | | | |

| GEARBOX / ANA ŞANZIMANLAR | USED VEHICLES / KULLANILAN BAZI ARAÇLAR |
|---|---|
| 2000 / SCAM 4X4 FOR GEARBOX TYPE ZF ECOLITE 6S 300 (6,73) (0.800 RIGHT) ZF ECOLITE 6S 350 (6373) (0.580 RIGHT) | 110 dCi-130 dCi-14-dCi-150dCi-160 Dxi RENAULT MASCOTT / IVECO 35 C 13 DAILY<br>GAMMA 2000 / SCAM 4X4 40 C 15 / 65 C 15 / IVECO LEONCINO 60Y13 / HISARLAR HISCAR-TURKAR 4X4 |

Seçeceğiniz pompanın dönüş yönü, P.T.O. dönüş yönü ile ters olmalıdır.
The rotation of the choosen pump has to be opposite with the rotation of P.T.O.

P.T.O. montaj edildikten sonra ana şanzıman yağını tamamlayın.
Fill the oil of the gear box after mounting the P.T.O.

# ZF 6-36 / 6S 850 DOUBLE GEAR ISO

## ZF 6-36 / 6S 850 AKTARMALI ISO



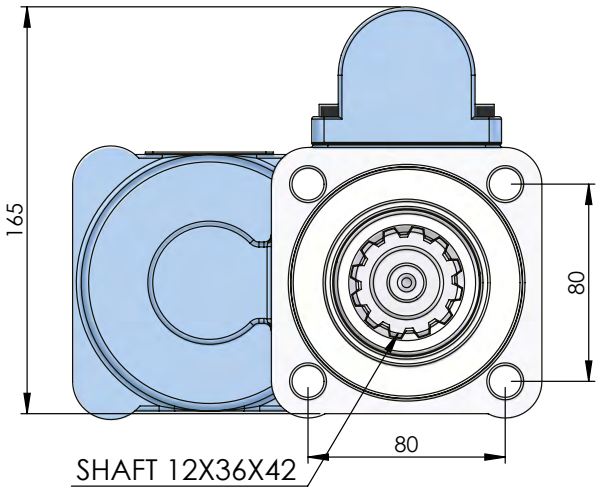


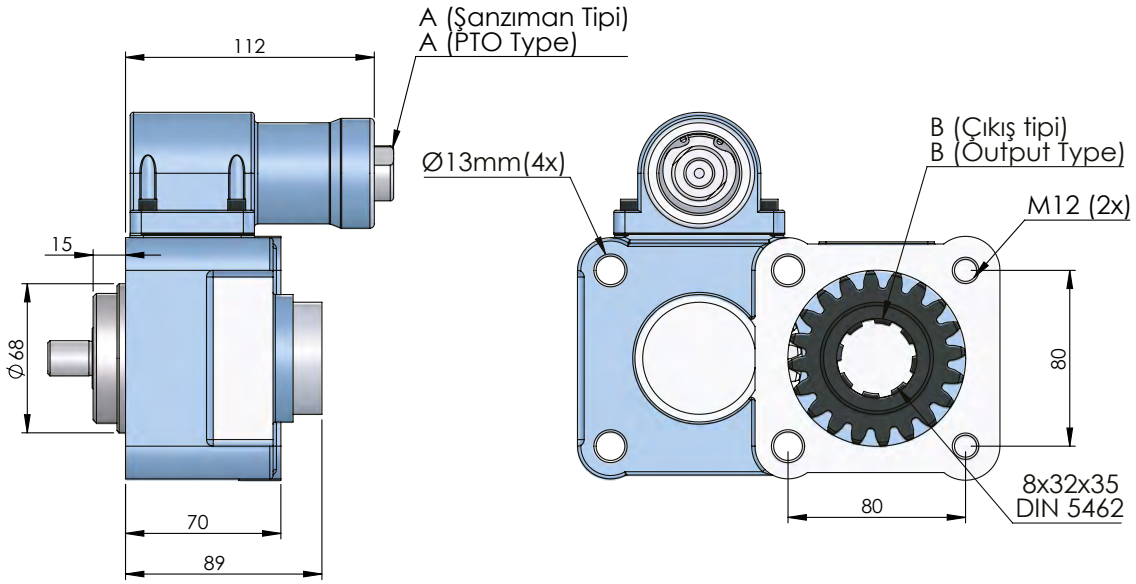


| CODE<br>KOD | TYPE<br>TİP (A) | MOUNTING TYPE<br>BAĞLANTI TİPİ (B) | MOUNTING SIDE<br>BAĞLANTI | TORQUE<br>TORK<br>(Kgm / Nm) | POWER<br>GÜÇ<br>(Hp / Kw) | SPEED<br>DEVİR<br>(RPM) | RATIO<br>ORAN |
|---|---|---|---|---|---|---|---|
| 50218311P0 | PNEUMATIC<br>PNÖMATİK | UNI ADAPTER<br>ADAPTÖRLÜ UNI | REAR<br>KUYRUK | 26,5 Kgm<br>260 Nm | 24,5 Hp<br>18,3 Kw | 675 | 1:1,2 |
| 50218321P0 | | ISO | | | | | |
| 50218331P0 | | FLANGE<br>ADAPTÖRLÜ FLANŞLI | | | | | |
| 50218341P0 | | SHAFT<br>ADAPTÖRLÜ ŞAFTLI | | | | | |

| GEARBOX / ANA ŞANZIMANLAR | USED VEHICLES / KULLANILAN BAZI ARAÇLAR |
|---|---|
| ZF ECOLITE 6 S 850 - 6S-800 TO/6S700 TO/ZF 6 AS 700 / ZF 44/ZF S5-35-45/ S6-36-GV 66- GV S6 650-GV S 5 18 /S5-35-45 (650 RPM, SOL) | 8.163-10.185-L 160C-LE 12.160-12.163-12.185-LE 18.220-18.225-18.230-18.240 MAN / 518-522 PRO / DAEWOO AVIA (CEK CUM.) / 180.18-180.25 -280.25-280.26 FATIH BMC / LF55-CF65- CF75 DAF / ASHOK LEYLAND / 815 ATEGO / 28.280 MAN / TGL 8.180-12.180 100E18-120E18- 150E18 EUROCARGO EURO5 IVECO / KAMAZ 4308-43253 |



Seçeceğiniz pompanın dönüş yönü, P.T.O. dönüş yönü ile ters olmalıdır.
The rotation of the choosen pump has to be opposite to the rotation of P.T.O.

P.T.O. montaj edildikten sonra ana şanzıman yağını tamamlayın.
Fill the oil of the gear box after mounting the P.T.O.

# ZF 6S 850 BENT AXIS DOUBLE GEAR ISO

## ZF 6S 850 EĞİK HAVA YASTIKLI ISO

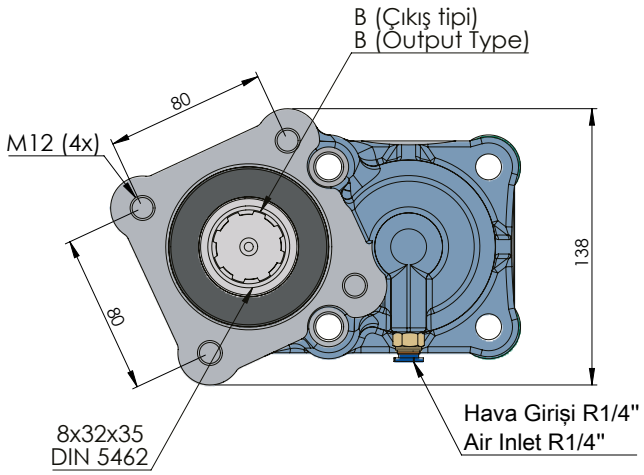




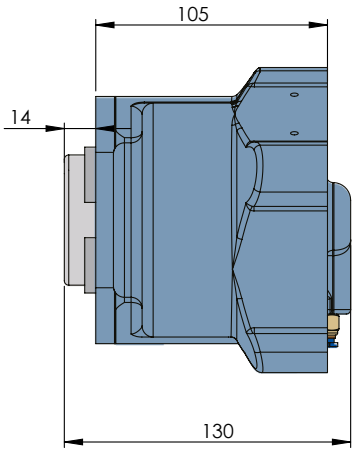


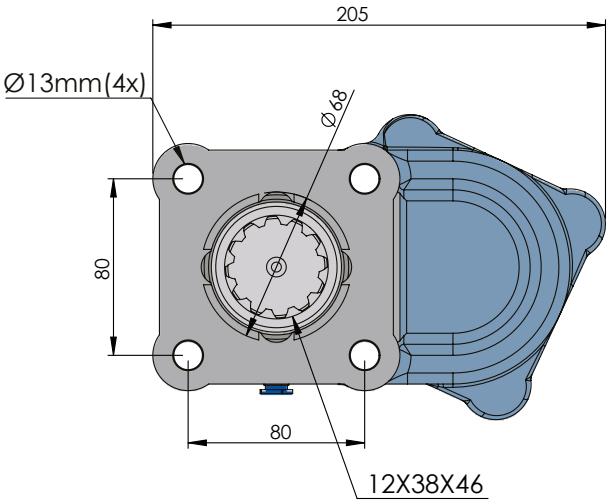


| CODE<br>KOD | TYPE<br>TİP (A) | MOUNTING TYPE<br>BAĞLANTI TİPİ (B) | MOUNTING SIDE<br>BAĞLANTI | TORQUE<br>TORK<br>(Kgm / Nm) | POWER<br>GÜÇ<br>(Hp / Kw) | SPEED<br>DEVİR<br>(RPM) | RATIO<br>ORAN |
|---|---|---|---|---|---|---|---|
| 50251311P0 | PNEUMATIC<br>PNÖMATİK | UNI ADAPTER<br>ADAPTÖRLÜ UNI | REAR<br>KUYRUK | 22,4 Kgm<br>219,7 Nm | 20 Hp<br>14,9 Kw | 650 | 1:1,21 |
| 50251321P0 | | ISO | | | | | |
| 50251331P0 | | FLANGE<br>ADAPTÖRLÜ FLANŞLI | | | | | |
| 50251341P0 | | SHAFT<br>ADAPTÖRLÜ ŞAFTLI | | | | | |

| GEARBOX / ANA ŞANZIMANLAR | USED VEHICLES / KULLANILAN BAZI ARAÇLAR |
|---|---|
| ZF ECOLITE 6 S 850 - 6S-800 TO/6S700 TO/ZF 6 AS 700 / ZF 44/ZF S5-35-45/ S6-36-GV 66- GV S6 650-GV S 5 18 /S5-35-45 (650 RPM, SOL) | 8.163-10.185-L 160C-LE 12.160-12.163-12.185-LE 18.220-18.225-18.230-18.240 MAN / 518-522 PRO / DAEWOO AVIA (CEK CUM.) / 180.18-180.25 -280.25-280.26 FATIH BMC / LF55-CF65- CF75 DAF / ASHOK LEYLAND / 815 ATEGO / 28.280 MAN / TGL 8.180-12.180 100E18-120E18- 150E18 EUROCARGO EURO5 IVECO / KAMAZ 4308-43253 |



Seçeceğiniz pompanın dönüş yönü, P.T.O. dönüş yönü ile ters olmalıdır.
The rotation of the choosen pump has to be opposite with the rotation of P.T.O.

P.T.O. montaj edildikten sonra ana şanzıman yağını tamamlayın.
Fill the oil of the gear box after mounting the P.T.O.

# ZF 6S 850 DOUBLE GEAR UNI

## ZF 6S 850 GRUBA SABİT AKTARMALI UNI



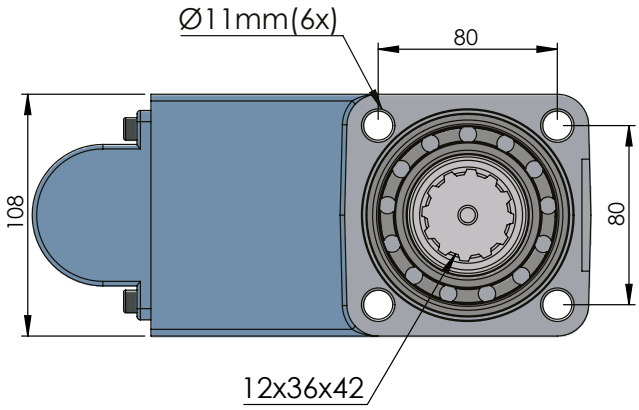


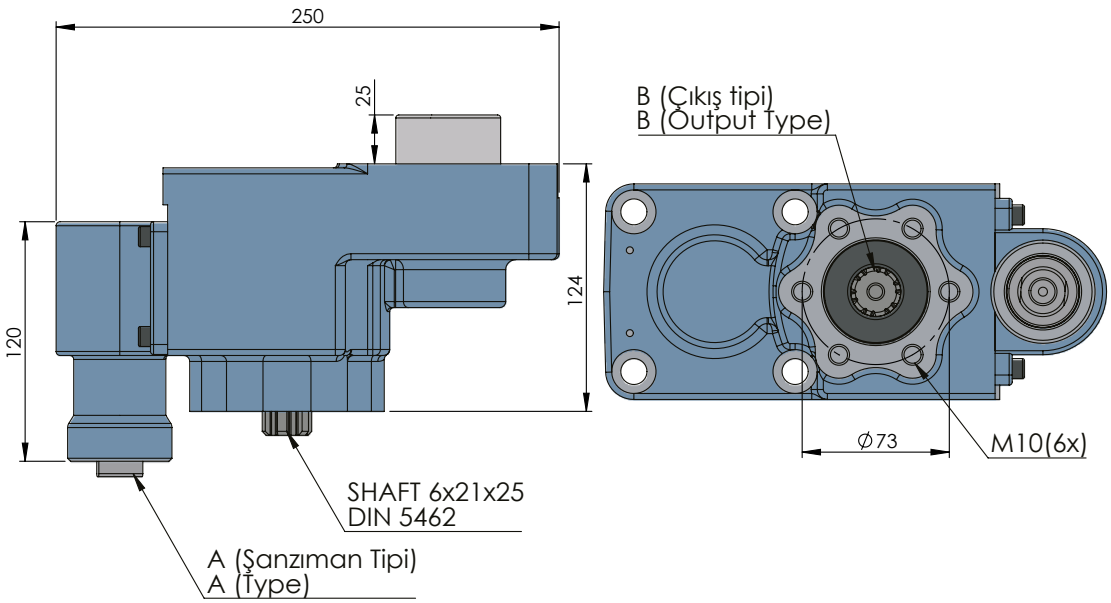


| CODE<br>KOD | TYPE<br>TİP (A) | MOUNTING TYPE<br>BAĞLANTI TİPİ (B) | MOUNTING SIDE<br>BAĞLANTI | TORQUE<br>TORK<br>(Kgm / Nm) | POWER<br>GÜÇ<br>(Hp / Kw) | SPEED<br>DEVİR<br>(RPM) | RATIO<br>ORAN |
|---|---|---|---|---|---|---|---|
| 50219311P0 | PNEUMATIC<br>PNÖMATİK | UNI | REAR<br>KUYRUK | 22,4 Kgm<br>219,7 Nm | 20 Hp<br>14,9 Kw | 650 | 1:1,12 |
| 50219321P0 | | ISO ADAPTER<br>ADAPTÖRLÜ ISO | | | | | |
| 50219331P0 | | FLANGE<br>FLANŞLI | | | | | |
| 50219341P0 | | SHAFT<br>ŞAFTLI | | | | | |

| GEARBOX / ANA ŞANZIMANLAR | USED VEHICLES / KULLANILAN BAZI ARAÇLAR |
|---|---|
| ZF ECOLITE 6 S 850 - 6S-800 TO/6S700 TO/ZF 6 AS 700 / ZF 44/ZF S5-35-45/ S6-36-GV 66- GV S6 650-GV S 5 18 /S5-35-45 (650 RPM, SOL) | 8.163-10.185-L 160C-LE 12.160-12.163-12.185-LE 18.220-18.225-18.230-18.240 MAN / 518-522 PRO / DAEWOO AVIA (CEK CUM.) / 180.18-180.25 -280.25-280.26 FATIH BMC / LF55-CF65- CF75 DAF / ASHOK LEYLAND / 815 ATEGO / 28.280 MAN / TGL 8.180-12.180 100E18-120E18- 150E18 EUROCARGO EURO5 IVECO / KAMAZ 4308-43253 |



Seçeceğiniz pompanın dönüş yönü, P.T.O. dönüş yönü ile ters olmalıdır.
The rotation of the choosen pump has to be opposite to the rotation of P.T.O.

P.T.O. montaj edildikten sonra ana şanzıman yağını tamamlayın.
Fill the oil of the gear box after mounting the P.T.O.

# ZF 6S 850 DOUBLE OUTLET ISO

## ZF 6S 850 ÇİFT ÇIKIŞLI AKTARMALI ISO

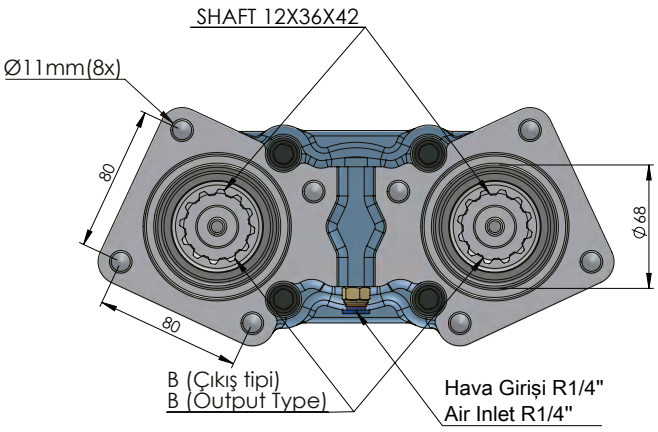




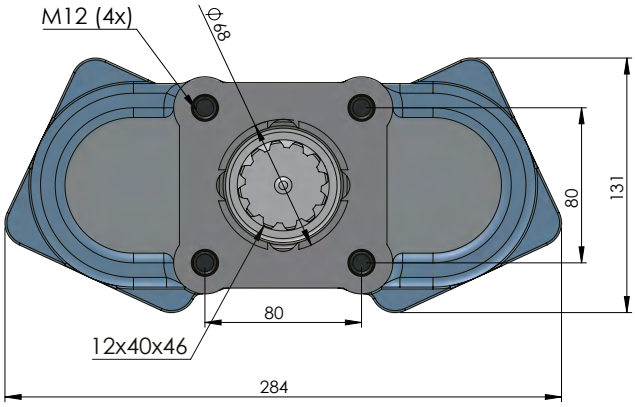


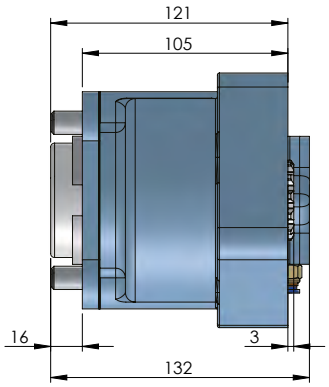


| CODE<br>KOD | TYPE<br>TİP (A) | MOUNTING TYPE<br>BAĞLANTI TİPİ (B) | MOUNTING SIDE<br>BAĞLANTI | TORQUE<br>TORK<br>(Kgm / Nm) | POWER<br>GÜÇ<br>(Hp / Kw) | SPEED<br>DEVİR<br>(RPM) | RATIO<br>ORAN |
|---|---|---|---|---|---|---|---|
| 50280311P0 | PNEUMATIC<br>PNÖMATİK | UNI ADAPTER<br>ADAPTÖRLÜ UNI | REAR<br>KUYRUK | 21 Kgm<br>255 Nm | 19 Hp<br>14 Kw | 675 | 1:1.2 |
| 50280321P0 | | ISO | | | | | |
| 50280331P0 | | FLANGE<br>ADAPTÖRLÜ FLANŞLI | | | | | |
| 50280341P0 | | SHAFT<br>ADAPTÖRLÜ ŞAFTLI | | | | | |

| GEARBOX / ANA ŞANZIMANLAR | USED VEHICLES / KULLANILAN BAZI ARAÇLAR |
|---|---|
| ZF ECOLITE 6 S 850 - 6S-800 TO/6S700 TO/ZF 6 AS 700 / ZF 44/ZF S5-35-45/ S6-36-GV 66- GV S6 650-GV S 5 18 /S5-35-45 (650 RPM, SOL) | 8.163-10.185-L 160C-LE 12.160-12.163-12.185-LE 18.220-18.225-18.230-18.240 MAN / 518-522 PRO / DAEWOO AVIA (CEK CUM.) / 180.18-180.25 -280.25-280.26 FATIH BMC / LF55-CF65- CF75 DAF / ASHOK LEYLAND / 815 ATEGO / 28.280 MAN / TGL 8.180-12.180 100E18-120E18- 150E18 EUROCARGO EURO5 IVECO / KAMAZ 4308-43253 |

Seçeceğiniz pompanın dönüş yönü, P.T.O. dönüş yönü ile ters olmalıdır.
The rotation of the choosen pump has to be opposite with the rotation of P.T.O.

P.T.O. montaj edildikten sonra ana şanzıman yağını tamamlayın.
Fill the oil of the gear box after mounting the P.T.O.

# ZF 5.72 SIDE UNI

## ZF 5.72 YAN UNI



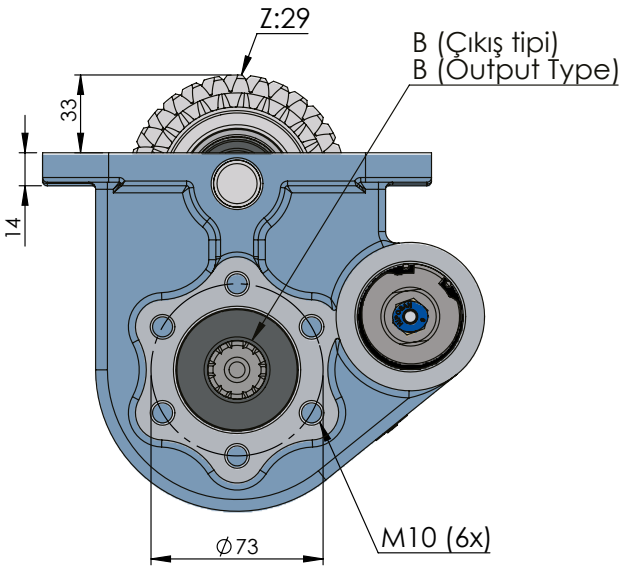


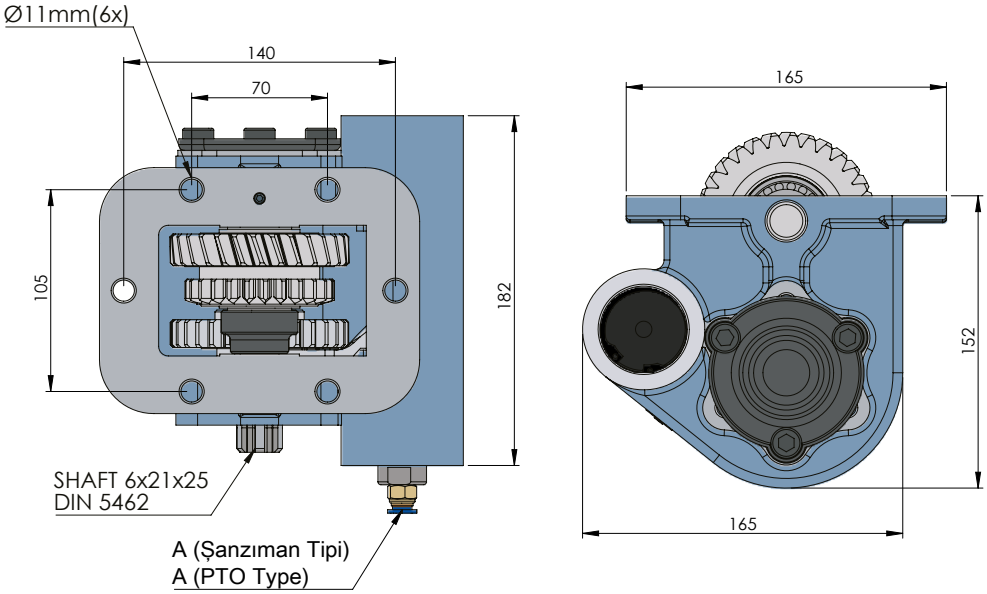


| CODE<br>KOD | TYPE<br>TİP (A) | MOUNTING TYPE<br>BAĞLANTI TİPİ (B) | MOUNTING SIDE<br>BAĞLANTI | TORQUE<br>TORK<br>(Kgm / Nm) | POWER<br>GÜÇ<br>(Hp / Kw) | SPEED<br>DEVİR<br>(RPM) | RATIO<br>ORAN |
|---|---|---|---|---|---|---|---|
| 50220512M0 | MECHANIC<br>MEKANİK | UNI | SIDE<br>YAN | 21 Kgm<br>254 Nm | 25 Hp<br>19 Kw | 1000 | 1:0.8 |
| 50220522M0 | | ISO ADAPTER<br>ADAPTÖRLÜ ISO | | | | | |
| 50220532M0 | | FLANGE<br>FLANŞLI | | | | | |
| 50220542M0 | | SHAFT<br>ŞAFTLI | | | | | |
| 50220512P0 | PNEUMATIC<br>PNÖMATİK | UNI | SIDE<br>YAN | 21 Kgm<br>254 Nm | 25 Hp<br>19 Kw | 1000 | 1:0.8 |
| 50220522P0 | | ISO ADAPTER<br>ADAPTÖRLÜ ISO | | | | | |
| 50220532P0 | | FLANGE<br>FLANŞLI | | | | | |
| 50220542P0 | | SHAFT<br>ŞAFTLI | | | | | |

| GEARBOX / ANA ŞANZIMANLAR | USED VEHICLES / KULLANILAN BAZI ARAÇLAR |
|---|---|
| ZF ECOLITE S5-42 (5,72) (1000 RPM, SAĞ) | 8.150-8.153-10.153-10.163-10.185 MAN / MB 800-1215-1517-ATEGO MERCEDES-BENZ / 45LF -170 DAF 45.120-45.130-45.150-45.160-0.130 LEYLAND DAF / RENAULT S 120.07-S120.08- 135-370 MIDLUM 302-304-306-313-317LEYLAND / 45LF.150-45LF.170 / MERCEDES VARIO- LEICHT 614-712-715-812-814-815 |

Seçeceğiniz pompanın dönüş yönü, P.T.O. dönüş yönü ile ters olmalıdır.
The rotation of the choosen pump has to be opposite to the rotation of P.T.O.

P.T.O. montaj edildikten sonra ana şanzıman yağını tamamlayın.
Fill the oil of the gear box after mounting the P.T.O.

# ZF 4.65 SIDE UNI

## ZF 4.65 YAN UNI

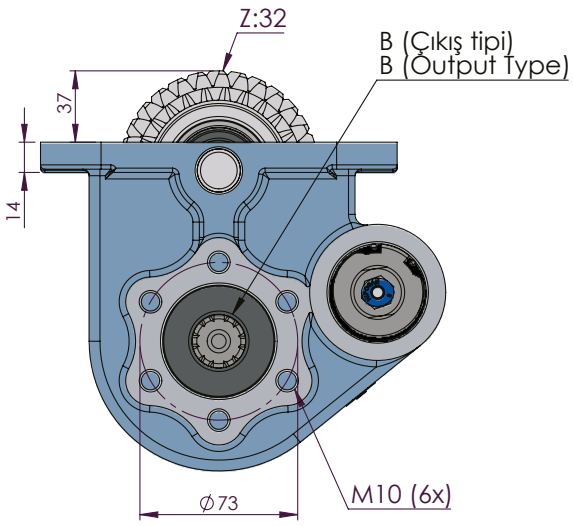




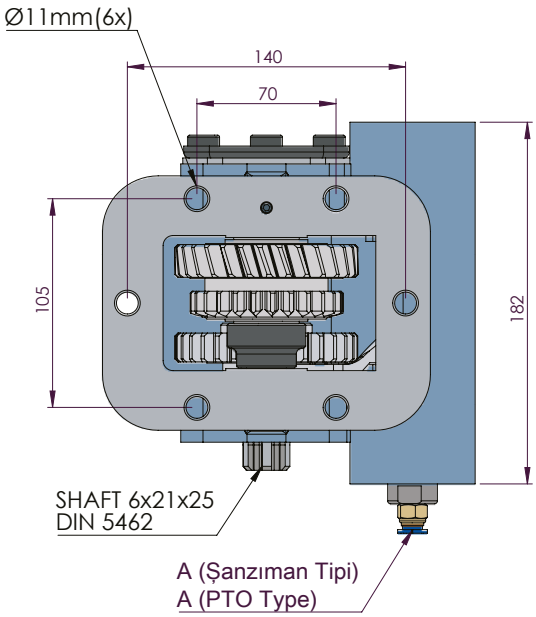


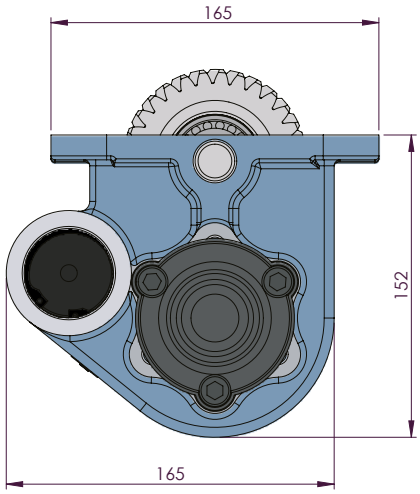


| CODE<br>KOD | TYPE<br>TİP (A) | MOUNTING TYPE<br>BAĞLANTI TİPİ (B) | MOUNTING SIDE<br>BAĞLANTI | TORQUE<br>TORK<br>(Kgm / Nm) | POWER<br>GÜÇ<br>(Hp / Kw) | SPEED<br>DEVİR<br>(RPM) | RATIO<br>ORAN |
|---|---|---|---|---|---|---|---|
| 50222512P0 | PNEUMATIC<br>PNÖMATİK | UNI | SIDE<br>YAN | 23 Kgm<br>238 Nm | 30 Hp<br>23 Kw | 1000 | 1:0.8 |
| 50222522P0 | | ISO ADAPTER<br>ADAPTÖRLÜ ISO | | | | | |
| 50222532P0 | | FLANGE<br>FLANŞLI | | | | | |
| 50222542P0 | | SHAFT<br>ŞAFTLI | | | | | |

| GEARBOX / ANA ŞANZIMANLAR | USED VEHICLES / KULLANILAN BAZI ARAÇLAR |
|---|---|
| ZF ECOLITE S5-42 (4,65) (1000 RPM, SAĞ) | 8.145-8.155-8.163 MAN / 45 DAF / LE 8.140-8.185 MAN / DAEWOO D75L / VOLVO |

Seçeceğiniz pompanın dönüş yönü, P.T.O. dönüş yönü ile ters olmalıdır.
The rotation of the choosen pump has to be opposite with the rotation of P.T.O.

P.T.O. montaj edildikten sonra ana şanzıman yağını tamamlayın.
Fill the oil of the gear box after mounting the P.T.O.

# ZF 6S 500 SIDE UNI

## ZF 6S 500 YAN UNI



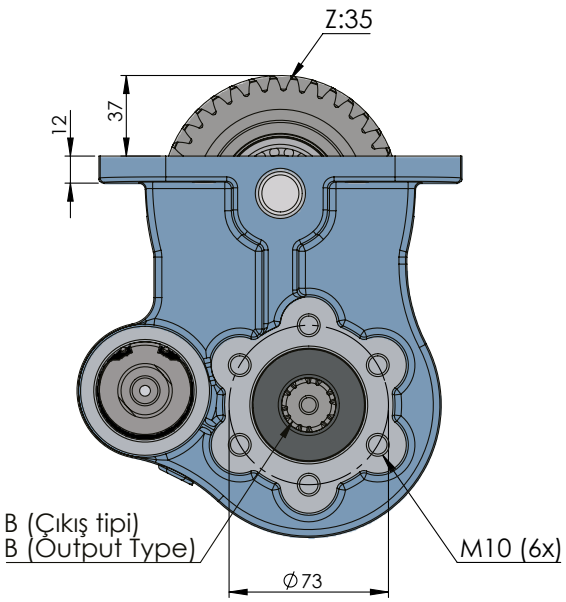


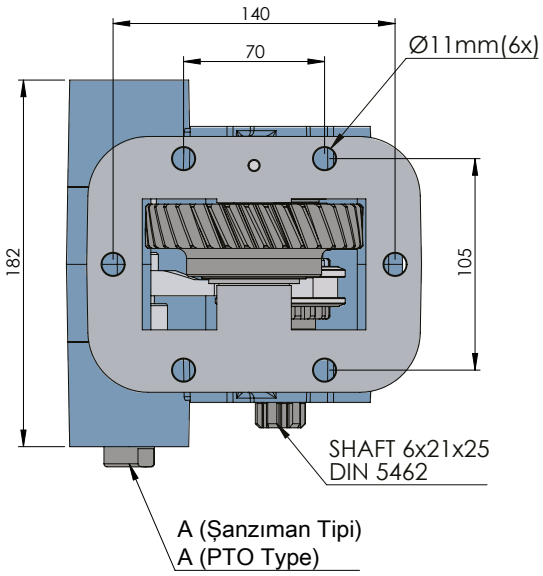


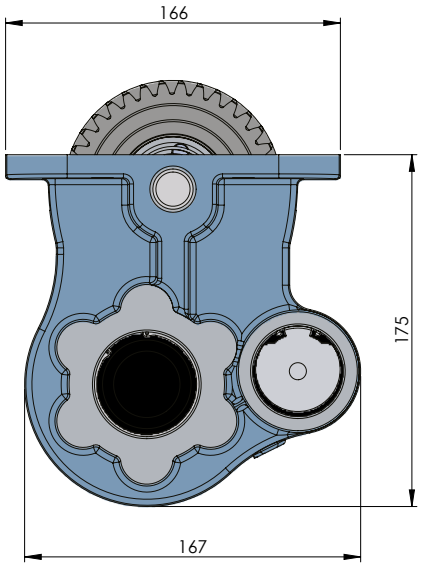


| CODE<br>KOD | TYPE<br>TİP (A) | MOUNTING TYPE<br>BAĞLANTI TİPİ (B) | MOUNTING SIDE<br>BAĞLANTI | TORQUE<br>TORK<br>(Kgm / Nm) | POWER<br>GÜÇ<br>(Hp / Kw) | SPEED<br>DEVİR<br>(RPM) | RATIO<br>ORAN |
|---|---|---|---|---|---|---|---|
| 50218512P0 | PNEUMATIC<br>PNÖMATİK | UNI | SIDE<br>YAN | 17.9 Kgm<br>180 Nm | 21.5 Hp<br>16 Kw | 1000 | 1:0.95 |
| 50218522P0 | | ISO ADAPTER<br>ADAPTÖRLÜ ISO | | | | | |
| 50218532P0 | | FLANGE<br>FLANŞLI | | | | | |
| 50218542P0 | | SHAFT<br>ŞAFTLI | | | | | |

| GEARBOX / ANA ŞANZIMANLAR | USED VEHICLES / KULLANILAN BAZI ARAÇLAR |
|---|---|
| ZF 6S 500 | FAW 8.140FL / FD,FOTON 10-16 DT,Otokar Atlas EURO 6 |



Seçeceğiniz pompanın dönüş yönü, P.T.O. dönüş yönü ile ters olmalıdır.
The rotation of the choosen pump has to be opposite to the rotation of P.T.O.

P.T.O. montaj edildikten sonra ana şanzıman yağını tamamlayın.
Fill the oil of the gear box after mounting the P.T.O.

# ZF TRAXON SINGLE GEAR ISO

## ZF TRAXON TEK DİŞLİ ISO

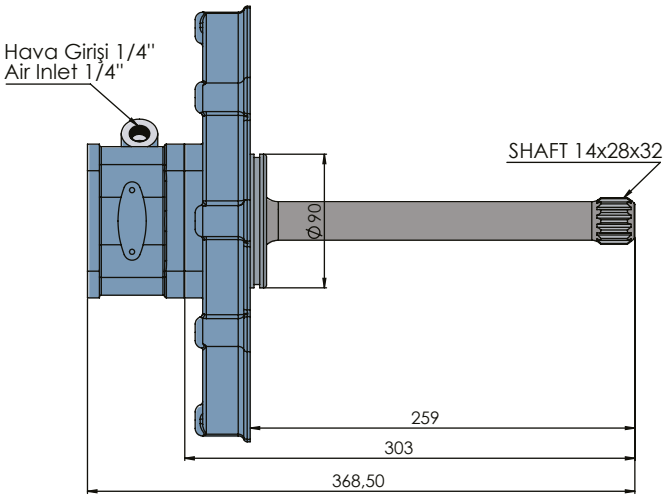




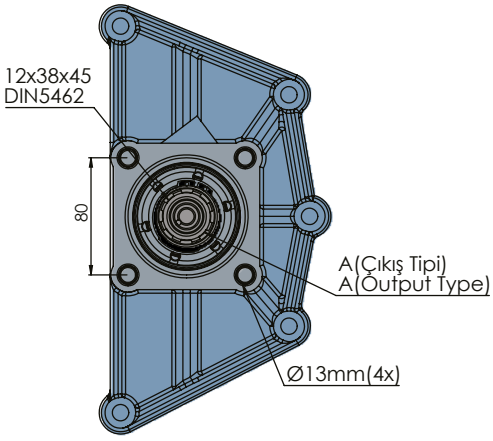


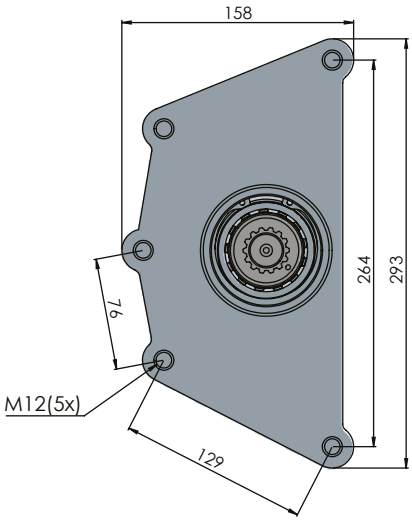


| CODE<br>KOD | TYPE<br>TİP (A) | MOUNTING TYPE<br>BAĞLANTI TİPİ (B) | MOUNTING SIDE<br>BAĞLANTI | TORQUE<br>TORK<br>(Kgm / Nm) | POWER<br>GÜÇ<br>(Hp / Kw) | SPEED<br>DEVİR<br>(RPM) | RATIO<br>ORAN |
|---|---|---|---|---|---|---|---|
| 50240312P0 | PNEUMATIC<br>PNÖMATİK | UNI ADAPTER<br>ADAPTÖRLÜ UNI | SIDE<br>YAN | 23 Kgm<br>255 Nm | 16 Hp<br>12 Kw | 500 | 1:1 |
| 50240322P0 | | ISO | | | | | |
| 50240332P0 | | FLANGE<br>ADAPTÖRLÜ FLANŞLI | | | | | |
| 50240342P0 | | SHAFT<br>ADAPTÖRLÜ ŞAFTLI | | | | | |

| GEARBOX / ANA ŞANZIMANLAR | USED VEHICLES / KULLANILAN BAZI ARAÇLAR |
|---|---|
| 12TX-1410TD-16.69-1.0, 12TX-1610TD-16.69-1.0, 12TX-1610TO-12.92-0.77, 12TX-1810TD-16.69 -1.0, 12TX-1810TO-12.92-0.77, 12TX-2010TD-16.69-1.0, 12TX-2010TO-12.92-0.77, 12TX-2210TD -16.69-1.0, 12TX-2210TO-12.92-0.77, 12TX-2420TD-16.69-1.0, 12TX-2610TO-12.92-0.77, 12TX- 2620TD-16.69-1.0, 12TX-2820TD-16.69-1.0, 12TX-2820TO-12.92-0.77, 12TX-3020TO-12.92-0.77 , 12TX-3220TO-12.92-0.77, 12TX-3420TO-12.92-0.77, 16TX-1640TD-17.94-1.0, 16TX-1840TD- 17.94-1.0, 16TX-1840TO-14.68-0.82, 16TX-2040TD-17.94-1.0, 16TX-2040TO-14.68-0.82, 16TX- 2240TD-17.94-1.0, 16TX-2240TO-14.68-0.82, 16TX-2440TD-17.94-1.0, 16TX-2440TO-14.68-0.82, 16TX-2640TD-17.94-1.0, 16TX-2640TO-14.68-0.82, 16TX-2840TD-17.94-1.0, 16TX-2840TO-14.68 -0.82, 16TX-3040TO-14.68-0.82, 16TX-3240TO-14.68-0.82, 16TX-3440TO-14.68-0.82, 16TX- 2410TO / 12.92-0.77 | FORD 1848 |

Seçeceğiniz pompanın dönüş yönü, P.T.O. dönüş yönü ile ters olmalıdır.
The rotation of the choosen pump has to be opposite with the rotation of P.T.O.

P.T.O. montaj edildikten sonra ana şanzıman yağını tamamlayın.
Fill the oil of the gear box after mounting the P.T.O.

# ZF TRAXON DOUBLE GEAR ISO

## ZF TRAXON AKTARMALI ISO



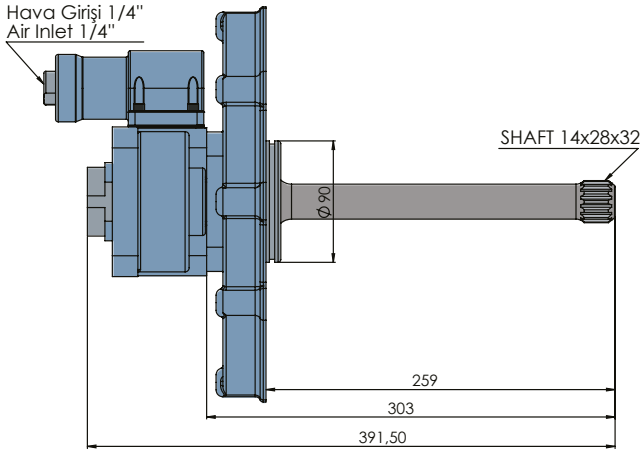


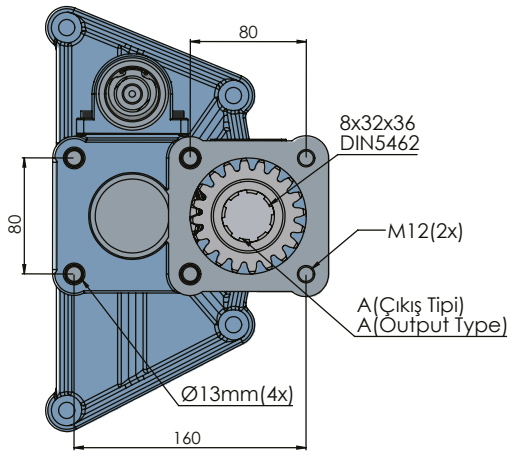


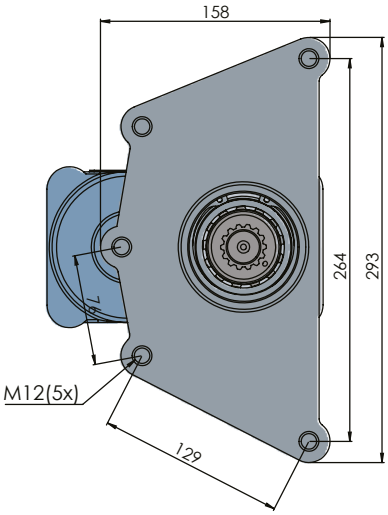


| CODE<br>KOD | TYPE<br>TİP (A) | MOUNTING TYPE<br>BAĞLANTI TİPİ (B) | MOUNTING SIDE<br>BAĞLANTI | TORQUE<br>TORK<br>(Kgm / Nm) | POWER<br>GÜÇ<br>(Hp / Kw) | SPEED<br>DEVİR<br>(RPM) | RATIO<br>ORAN |
|---|---|---|---|---|---|---|---|
| 50240311P0 | PNEUMATIC<br>PNÖMATİK | UNI ADAPTER<br>ADAPTÖRLÜ UNI | SIDE<br>YAN | 26,5 Kgm<br>260 Nm | 24,5 Hp<br>18,3 Kw | 675 | 1:1,2 |
| 50240321P0 | | ISO | | | | | |
| 50240331P0 | | FLANGE<br>ADAPTÖRLÜ FLANŞLI | | | | | |
| 50240341P0 | | SHAFT<br>ADAPTÖRLÜ ŞAFTLI | | | | | |

| GEARBOX / ANA ŞANZIMANLAR | USED VEHICLES / KULLANILAN BAZI ARAÇLAR |
|---|---|
| 12TX-1410TD-16.69-1.0, 12TX-1610TD-16.69-1.0, 12TX-1610TO-12.92-0.77, 12TX-1810TD-16.69 -1.0, 12TX-1810TO-12.92-0.77, 12TX-2010TD-16.69-1.0, 12TX-2010TO-12.92-0.77, 12TX-2210TD -16.69-1.0, 12TX-2210TO-12.92-0.77, 12TX-2420TD-16.69-1.0, 12TX-2610TO-12.92-0.77, 12TX- 2620TD-16.69-1.0, 12TX-2820TD-16.69-1.0, 12TX-2820TO-12.92-0.77, 12TX-3020TO-12.92-0.77 , 12TX-3220TO-12.92-0.77, 12TX-3420TO-12.92-0.77, 16TX-1640TD-17.94-1.0, 16TX-1840TD- 17.94-1.0, 16TX-1840TO-14.68-0.82, 16TX-2040TD-17.94-1.0, 16TX-2040TO-14.68-0.82, 16TX- 2240TD-17.94-1.0, 16TX-2240TO-14.68-0.82, 16TX-2440TD-17.94-1.0, 16TX-2440TO-14.68-0.82, 16TX-2640TD-17.94-1.0, 16TX-2640TO-14.68-0.82, 16TX-2840TD-17.94-1.0, 16TX-2840TO-14.68 -0.82, 16TX-3040TO-14.68-0.82, 16TX-3240TO-14.68-0.82, 16TX-3440TO-14.68-0.82, 16TX- 2410TO / 12.92-0.77 | FORD 1848 |



Seçeceğiniz pompanın dönüş yönü, P.T.O. dönüş yönü ile ters olmalıdır.
The rotation of the choosen pump has to be opposite to the rotation of P.T.O.

P.T.O. montaj edildikten sonra ana şanzıman yağını tamamlayın.
Fill the oil of the gear box after mounting the P.T.O.

# ZF 6S 400 SIDE UNI

## ZF 6S 400 YAN UNI

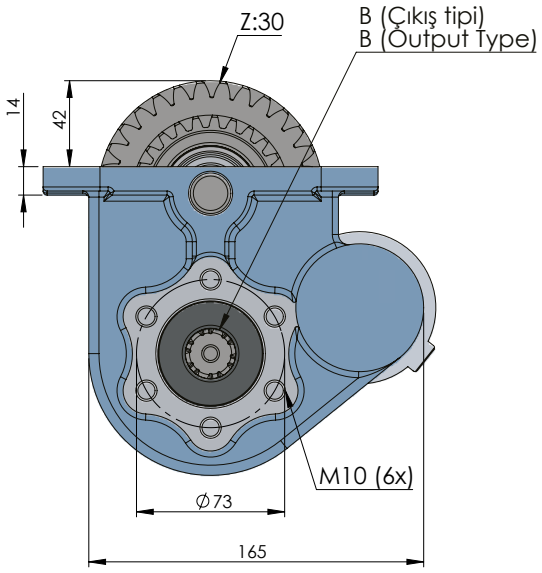




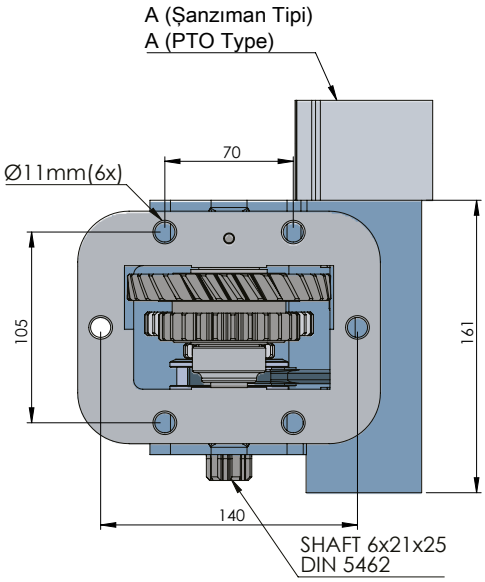


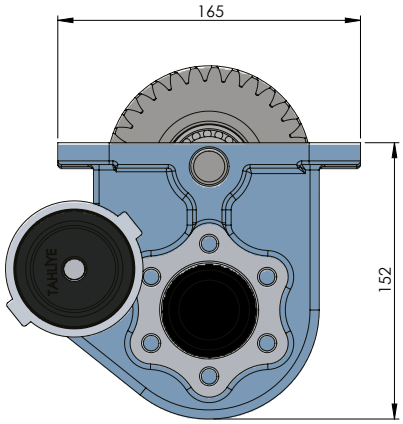


| CODE<br>KOD | TYPE<br>TİP (A) | MOUNTING TYPE<br>BAĞLANTI TİPİ (B) | MOUNTING SIDE<br>BAĞLANTI | TORQUE<br>TORK<br>(Kgm / Nm) | POWER<br>GÜÇ<br>(Hp / Kw) | SPEED<br>DEVİR<br>(RPM) | RATIO<br>ORAN |
|---|---|---|---|---|---|---|---|
| 50216512M0 | MECHANIC<br>MEKANİK | PTO OUTLET TYPE<br>PTO ÇIKIŞ TİPİ<br>(B) | SIDE<br>YAN | 21 Kgm<br>206 Nm | 36 Hp<br>22 Kw | 700 | 1:0.8 |
| 50216522M0 | | UNI | | | | | |
| 50216532M0 | | ISO ADAPTER<br>ADAPTÖRLÜ ISO | | | | | |
| 50216542M0 | | FLANGE<br>FLANŞLI | | | | | |
| 50216522V0 | VACUUM<br>VAKUMLU | UNİ | | 21 Kgm<br>206 Nm | 36 Hp<br>22 Kw | 700 | 1:0.8 |
| 50216532V0 | | ISO ADAPTER<br>ADAPTÖRLÜ ISO | | | | | |
| 50216542V0 | | FLANGE<br>FLANŞLI | | | | | |
| 50216542V0 | | SHAFT<br>ŞAFTLI | | | | | |

| GEARBOX / ANA ŞANZIMANLAR | USED VEHICLES / KULLANILAN BAZI ARAÇLAR |
|---|---|
| ZF 6S 380 / 6S 400 / IVECO SpA 2840.623M0 / IVECO SpA 2840.618D11 | IVECO 45C15 - DAILY 4X4 - 50C18 - 35C15 - 50C15 - IVECO 65C15 - 70C15 - IVECO DAILY 4X4 55S18 / NISSAN ATLEON 56.15 / |

Seçeceğiniz pompanın dönüş yönü, P.T.O. dönüş yönü ile ters olmalıdır.
The rotation of the choosen pump has to be opposite with the rotation of P.T.O.

P.T.O. montaj edildikten sonra ana şanzıman yağını tamamlayın.
Fill the oil of the gear box after mounting the P.T.O.

# SCANIA GR900 UNI



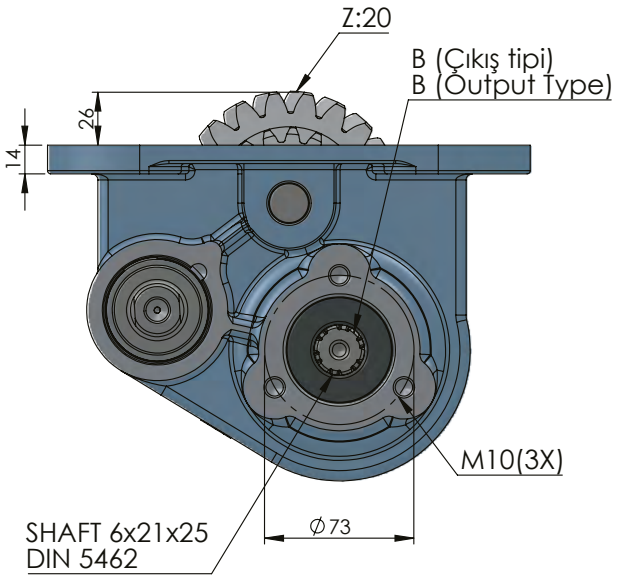


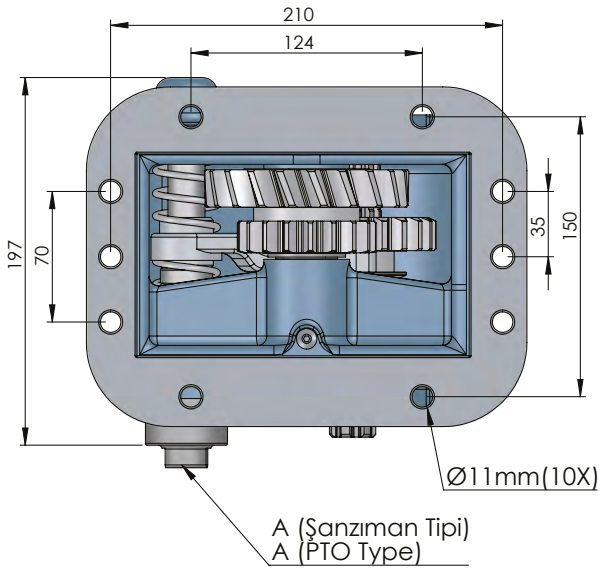


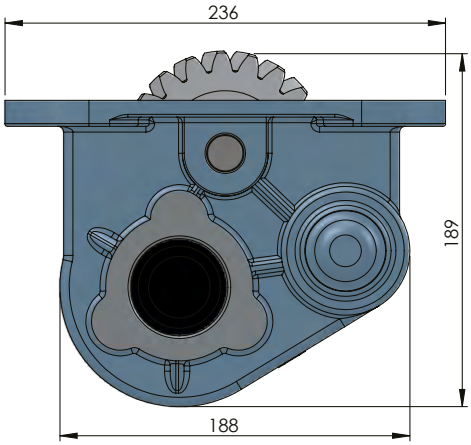


| CODE<br>KOD | TYPE<br>TİP (A) | MOUNTING TYPE<br>BAĞLANTI TİPİ (B) | MOUNTING SIDE<br>BAĞLANTI | TORQUE<br>TORK<br>(Kgm / Nm) | POWER<br>GÜÇ<br>(Hp / Kw) | SPEED<br>DEVİR<br>(RPM) | RATIO<br>ORAN |
|---|---|---|---|---|---|---|---|
| 50310512P0 | PNEUMATIC<br>PNÖMATİK | UNI | SIDE<br>YAN | 25 Kgm<br>245 Nm | 45.3 Hp<br>33.8 Kw | 1065 RPM | 01:00,8 |
| 50310522P0 | | ISO ADAPTER<br>ADAPTÖRLÜ ISO | | | | | |
| 50310532P0 | | FLANGE<br>FLANŞLI | | | | | |
| 50310542P0 | | SHAFT<br>ŞAFTLI | | | | | |

| GEARBOX / ANA ŞANZIMANLAR | USED VEHICLES / KULLANILAN BAZI ARAÇLAR |
|---|---|
| GR 900/ GRH 900 (1065 RPM,SAĞ) | 94 C 310-124 C 360-R 124 GB 360-124 G 360-143 H 450 CV-143M 400 CV-260H-143H/P 113M- P114-GA 380-114P-124R-113P-114R-113H 360 |



Seçeceğiniz pompanın dönüş yönü, P.T.O. dönüş yönü ile ters olmalıdır.
The rotation of the choosen pump has to be opposite to the rotation of P.T.O.

P.T.O. montaj edildikten sonra ana şanzıman yağını tamamlayın.
Fill the oil of the gear box after mounting the P.T.O.

# SCANIA GR900 ISO

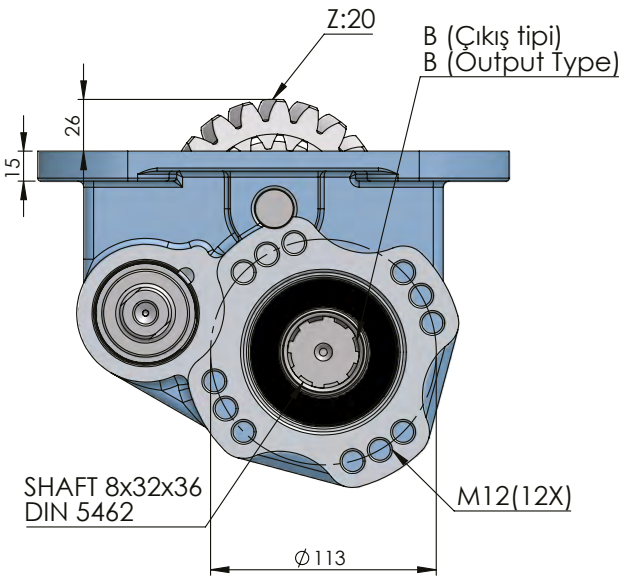




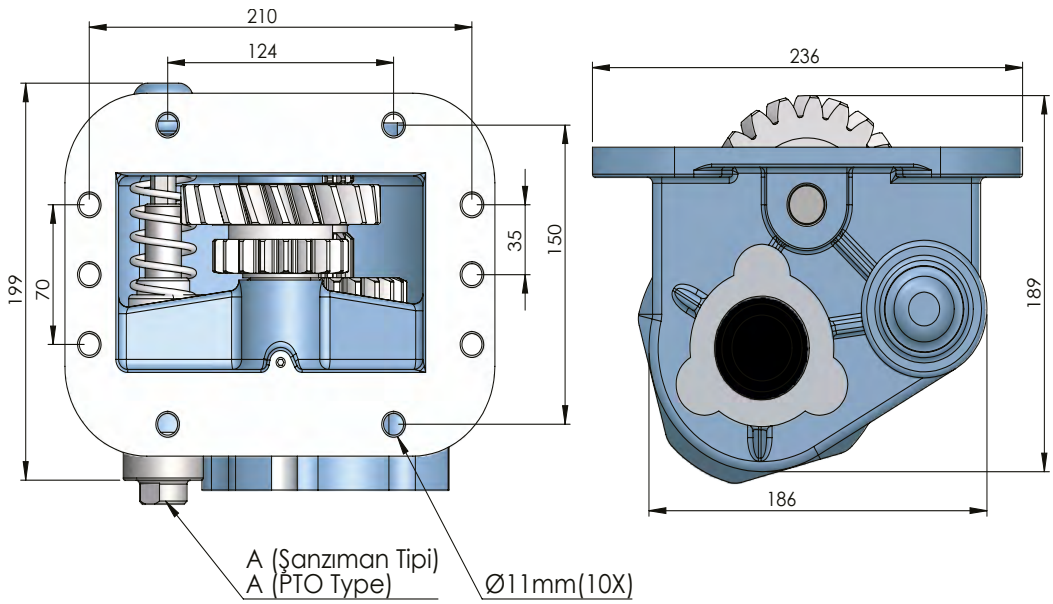


| CODE<br>KOD | TYPE<br>TİP (A) | MOUNTING TYPE<br>BAĞLANTI TİPİ (B) | MOUNTING SIDE<br>BAĞLANTI | TORQUE<br>TORK<br>(Kgm / Nm) | POWER<br>GÜÇ<br>(Hp / Kw) | SPEED<br>DEVİR<br>(RPM) | RATIO<br>ORAN |
|---|---|---|---|---|---|---|---|
| 50330512P0 | PNEUMATIC<br>PNÖMATİK | UNI ADAPTER<br>ADAPTÖRLÜ UNI | SIDE<br>YAN | "25 Kgm<br>245 Nm" | "45.3 Hp<br>33.8 Kw" | 1065 Rpm | 01:00,8 |
| 50330522P0 | | ISO | | | | | |
| 50330532P0 | | FLANGE<br>ADAPTÖRLÜ FLANŞLI | | | | | |
| 50330542P0 | | SHAFT<br>ADAPTÖRLÜ ŞAFTLI | | | | | |

| GEARBOX / ANA ŞANZIMANLAR | USED VEHICLES / KULLANILAN BAZI ARAÇLAR |
|---|---|
| GR 900/ GRH 900 (1065 rpm,SAĞ) | 94 C 310-124 C 360-R 124 GB 360-124 G 360-143 H 450 CV-143M 400 CV-260H-143H/P 113M- P114-GA 380-114P-124R-113P-114R-113H 360 |

Seçeceğiniz pompanın dönüş yönü, P.T.O. dönüş yönü ile ters olmalıdır.
The rotation of the choosen pump has to be opposite with the rotation of P.T.O.

P.T.O. montaj edildikten sonra ana şanzıman yağını tamamlayın.
Fill the oil of the gear box after mounting the P.T.O.

# SCANIA GRS900



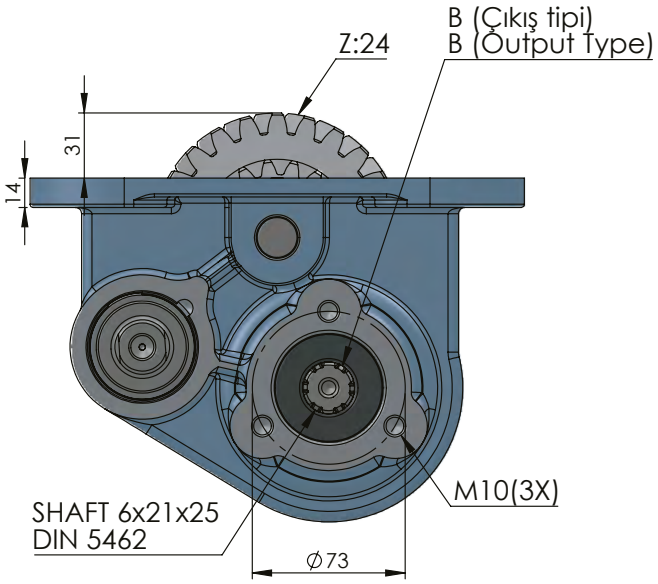


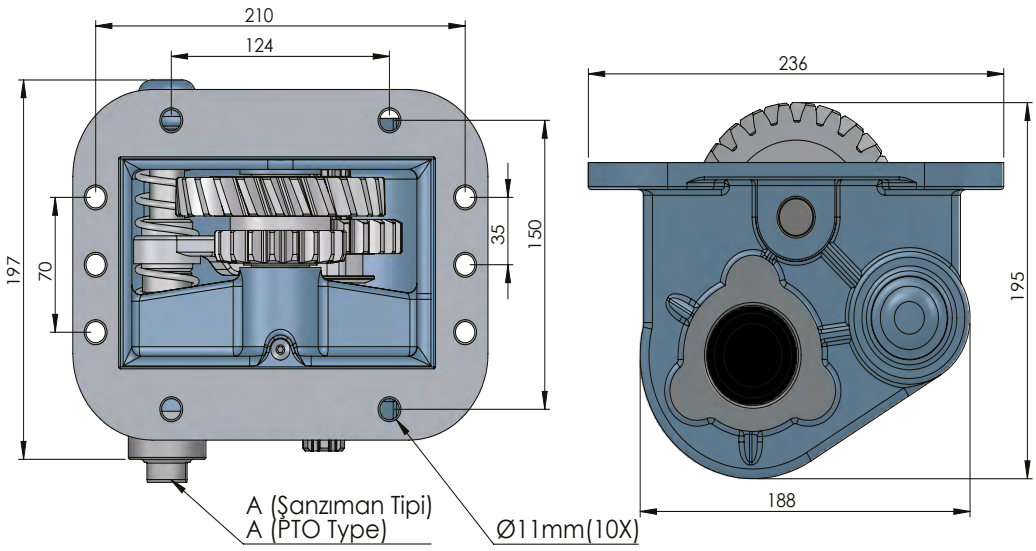


| CODE<br>KOD | TYPE<br>TİP (A) | MOUNTING TYPE<br>BAĞLANTI TİPİ (B) | MOUNTING SIDE<br>BAĞLANTI | TORQUE<br>TORK<br>(Kgm / Nm) | POWER<br>GÜÇ<br>(Hp / Kw) | SPEED<br>DEVİR<br>(RPM) | RATIO<br>ORAN |
|---|---|---|---|---|---|---|---|
| 50311512P0 | PNEUMATIC<br>PNÖMATİK | UNI | SIDE<br>YAN | 25 Kgm<br>245 Nm | 45.3 Hp<br>33.8 Kw | 1065 RPM | 01:00,8 |
| 50311522P0 | | ISO ADAPTER<br>ADAPTÖRLÜ ISO | | | | | |
| 50311532P0 | | FLANGE<br>FLANŞLI | | | | | |
| 50311542P0 | | SHAFT<br>ŞAFTLI | | | | | |

| GEARBOX / ANA ŞANZIMANLAR | USED VEHICLES / KULLANILAN BAZI ARAÇLAR |
|---|---|
| GRS 900/GRS 890/GRS 920 (1065 RPM, SAĞ) | 124 G 420-113-124 L 400-144 L 530-124 LA 420-144 LA 460 144 LA 530-R124 LA 420/R 124 GA 420-143H-143M-143.400-143.450-143.500-R580-R124GA/CB-R164 GA SCANIA |



Seçeceğiniz pompanın dönüş yönü, P.T.O. dönüş yönü ile ters olmalıdır.
The rotation of the choosen pump has to be opposite to the rotation of P.T.O.

P.T.O. montaj edildikten sonra ana şanzıman yağını tamamlayın.
Fill the oil of the gear box after mounting the P.T.O.

# SCANIA GRS900 ISO

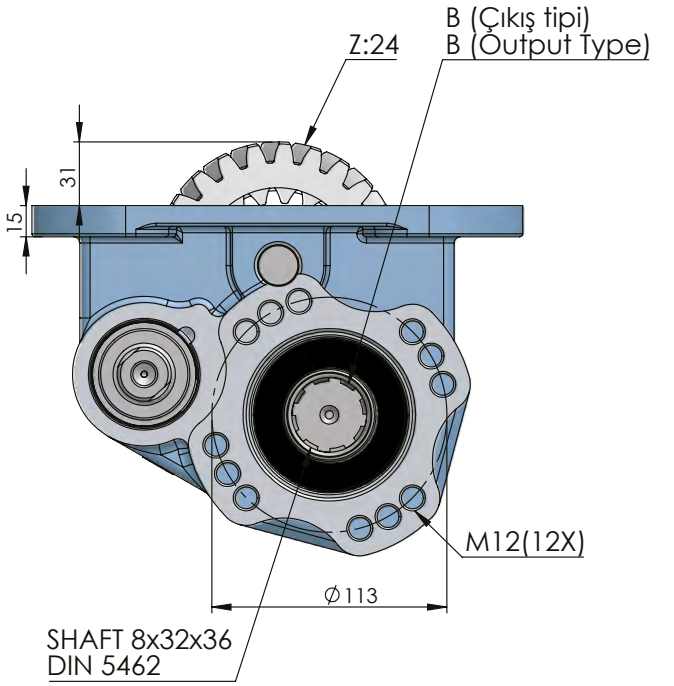




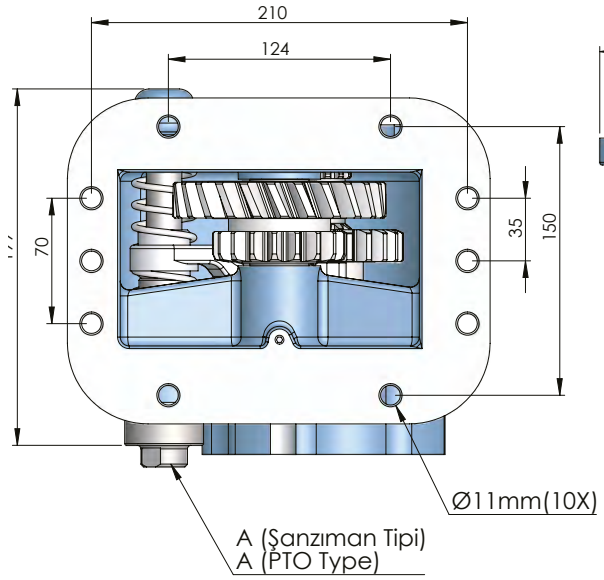


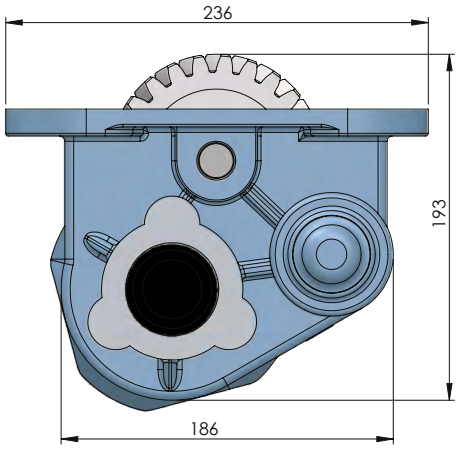


| CODE<br>KOD | TYPE<br>TİP (A) | MOUNTING TYPE<br>BAĞLANTI TİPİ (B) | MOUNTING SIDE<br>BAĞLANTI | TORQUE<br>TORK<br>(Kgm / Nm) | POWER<br>GÜÇ<br>(Hp / Kw) | SPEED<br>DEVİR<br>(RPM) | RATIO<br>ORAN |
|---|---|---|---|---|---|---|---|
| 50331512P0 | PNEUMATIC<br>PNÖMATİK | UNI ADAPTER<br>ADAPTÖRLÜ UNI | SIDE<br>YAN | 25 Kgm<br>245 Nm | 45.3 Hp<br>33.8 Kw | 1065 RPM | 01:00,8 |
| 50331522P0 | | ISO | | | | | |
| 50331532P0 | | FLANGE<br>ADAPTÖRLÜ FLANŞLI | | | | | |
| 50331542P0 | | SHAFT<br>ADAPTÖRLÜ ŞAFTLI | | | | | |

| GEARBOX / ANA ŞANZIMANLAR | USED VEHICLES / KULLANILAN BAZI ARAÇLAR |
|---|---|
| GRS 900/GRS 890/GRS 920 (1065 RPM, SAĞ) | 124 G 420-113-124 L 400-144 L 530-124 LA 420-144 LA 460 144 LA 530-R124 LA 420/R 124 GA 420-143H-143M-143.400-143.450-143.500-R580-R124GA/CB-R164 GA SCANIA |

Seçeceğiniz pompanın dönüş yönü, P.T.O. dönüş yönü ile ters olmalıdır.
The rotation of the choosen pump has to be opposite with the rotation of P.T.O.

P.T.O. montaj edildikten sonra ana şanzıman yağını tamamlayın.
Fill the oil of the gear box after mounting the P.T.O.

# SCANIA GRS905



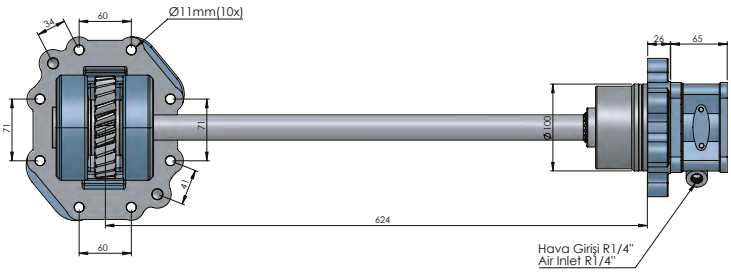


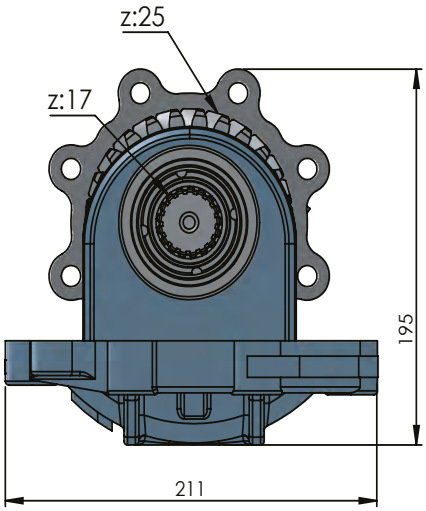


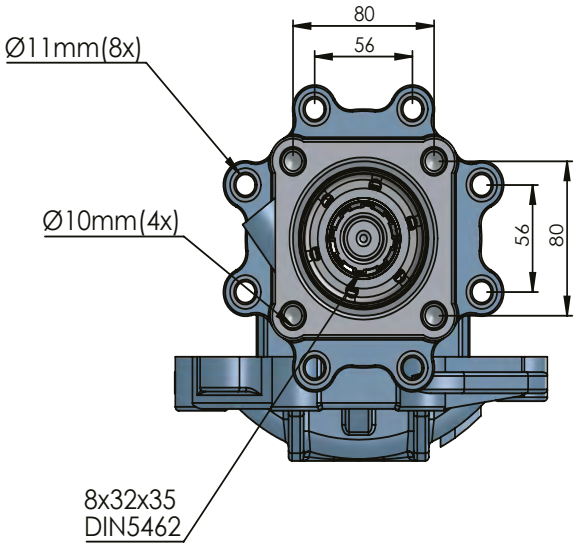


| CODE<br>KOD | TYPE<br>TİP (A) | MOUNTING TYPE<br>BAĞLANTI TİPİ (B) | MOUNTING SIDE<br>BAĞLANTI | TORQUE<br>TORK<br>(Kgm / Nm) | POWER<br>GÜÇ<br>(Hp / Kw) | SPEED<br>DEVİR<br>(RPM) | RATIO<br>ORAN |
|---|---|---|---|---|---|---|---|
| 50312411P0 | PNEUMATIC<br>PNÖMATİK | UNI ADAPTER<br>ADAPTÖRLÜ UNI | REAR<br>KUYRUK | 44.8 Kgm<br>436 Nm | 56.8 Hp<br>42.4 Kw | 1250 RPM | 1:1 |
| 50312421P0 | | ISO | | | | | |
| 50312431P0 | | FLANGE<br>ADAPTÖRLÜ FLANŞLI | | | | | |
| 50312441P0 | | SHAFT<br>ADAPTÖRLÜ ŞAFTLI | | | | | |

| GEARBOX / ANA ŞANZIMANLAR | USED VEHICLES / KULLANILAN BAZI ARAÇLAR |
|---|---|
| GR 875/ GR 905 / GRS 905 / GRSO 906 / GRS 906 (1250 RPM, SOL) | R420-G 420-G 400 EURO 5- R 500 SCANIA / 18.460 MAN TGS |



Seçeceğiniz pompanın dönüş yönü, P.T.O. dönüş yönü ile ters olmalıdır.
The rotation of the choosen pump has to be opposite to the rotation of P.T.O.

P.T.O. montaj edildikten sonra ana şanzıman yağını tamamlayın.
Fill the oil of the gear box after mounting the P.T.O.

# SCANIA GRS895R

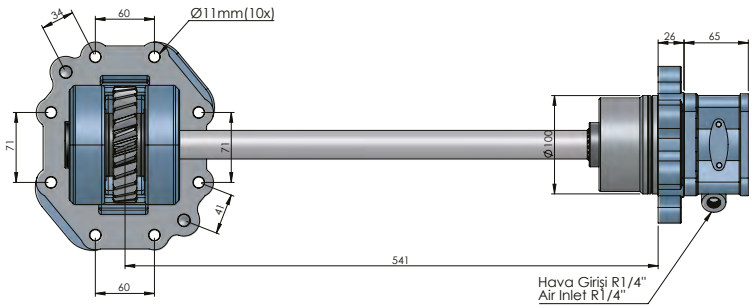




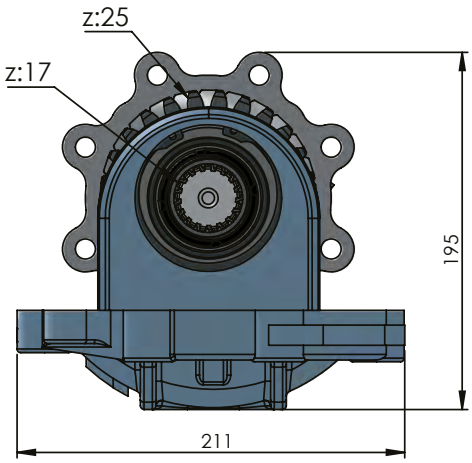


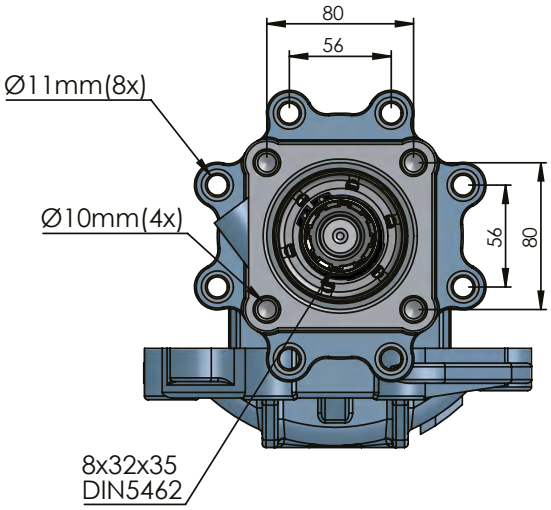


| CODE<br>KOD | TYPE<br>TİP (A) | MOUNTING TYPE<br>BAĞLANTI TİPİ (B) | MOUNTING SIDE<br>BAĞLANTI | TORQUE<br>TORK<br>(Kgm / Nm) | POWER<br>GÜÇ<br>(Hp / Kw) | SPEED<br>DEVİR<br>(RPM) | RATIO<br>ORAN |
|---|---|---|---|---|---|---|---|
| 50313411P0 | PNEUMATIC<br>PNÖMATİK | UNI ADAPTER<br>ADAPTÖRLÜ UNI | REAR<br>KUYRUK | 44.8 Kgm<br>436 Nm | 56.8 Hp<br>42.4 Kw | 1250 RPM | 1:1 |
| 50313421P0 | | ISO | | | | | |
| 50313431P0 | | FLANGE<br>ADAPTÖRLÜ FLANŞLI | | | | | |
| 50313441P0 | | SHAFT<br>ADAPTÖRLÜ ŞAFTLI | | | | | |

| GEARBOX / ANA ŞANZIMANLAR | USED VEHICLES / KULLANILAN BAZI ARAÇLAR |
|---|---|
| GRS 895 R | R440 SCANIA |

Seçeceğiniz pompanın dönüş yönü, P.T.O. dönüş yönü ile ters olmalıdır.
The rotation of the choosen pump has to be opposite with the rotation of P.T.O.

P.T.O. montaj edildikten sonra ana şanzıman yağını tamamlayın.
Fill the oil of the gear box after mounting the P.T.O.

# SCANIA GRSO905



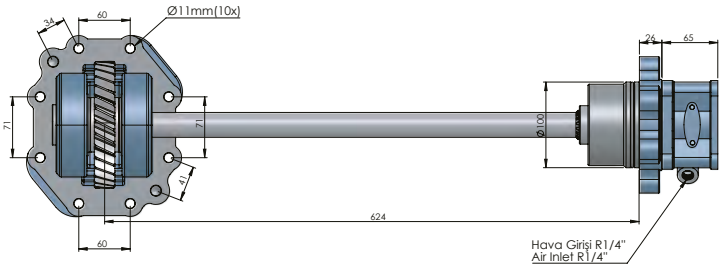


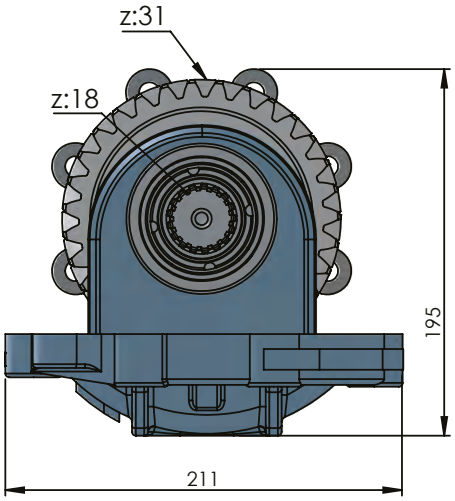


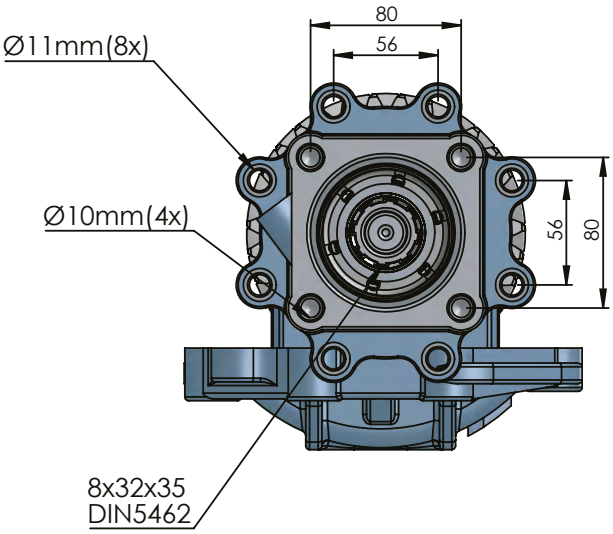


| CODE<br>KOD | TYPE<br>TİP (A) | MOUNTING TYPE<br>BAĞLANTI TİPİ (B) | MOUNTING SIDE<br>BAĞLANTI | TORQUE<br>TORK<br>(Kgm / Nm) | POWER<br>GÜÇ<br>(Hp / Kw) | SPEED<br>DEVİR<br>(RPM) | RATIO<br>ORAN |
|---|---|---|---|---|---|---|---|
| 50314411P0 | PNEUMATIC<br>PNÖMATİK | UNI ADAPTER<br>ADAPTÖRLÜ UNI | REAR<br>KUYRUK | 44.8 Kgm<br>436 Nm | 56.8 Hp<br>42.4 Kw | 1250 RPM | 1:1 |
| 50314421P0 | | ISO | | | | | |
| 50314431P0 | | FLANGE<br>ADAPTÖRLÜ FLANŞLI | | | | | |
| 50314441P0 | | SHAFT<br>ADAPTÖRLÜ ŞAFTLI | | | | | |

| GEARBOX / ANA ŞANZIMANLAR | USED VEHICLES / KULLANILAN BAZI ARAÇLAR |
|---|---|
| GRSO 905 | R420 / G420 SCANIA |



Seçeceğiniz pompanın dönüş yönü, P.T.O. dönüş yönü ile ters olmalıdır.
The rotation of the choosen pump has to be opposite to the rotation of P.T.O.

P.T.O. montaj edildikten sonra ana şanzıman yağını tamamlayın.
Fill the oil of the gear box after mounting the P.T.O.

# SCANIA GR801

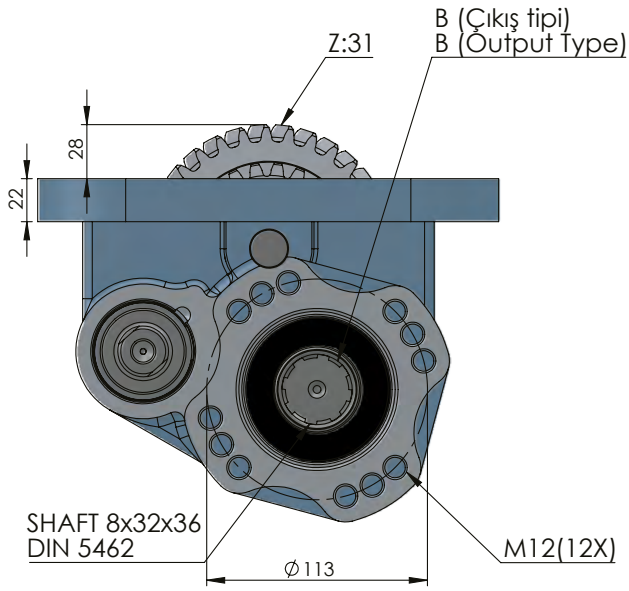




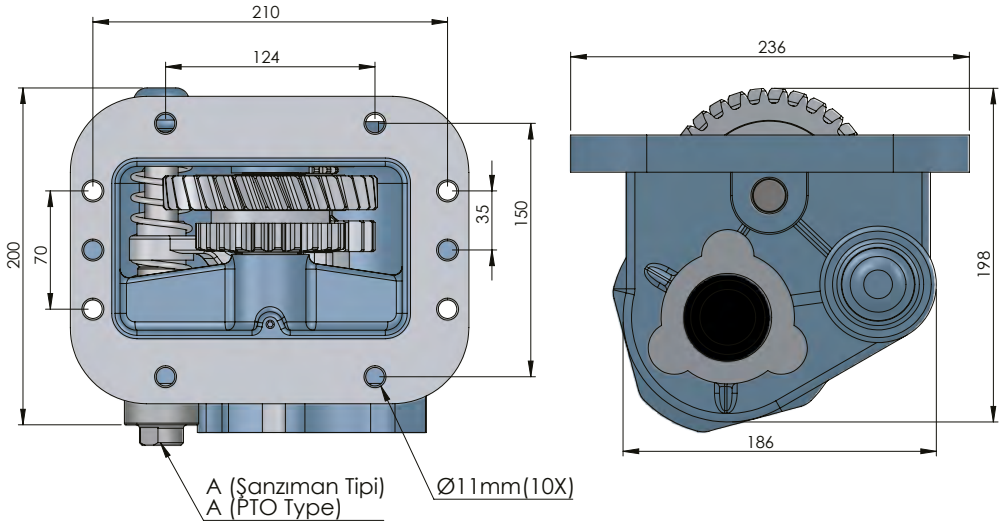


| CODE<br>KOD | TYPE<br>TİP (A) | MOUNTING TYPE<br>BAĞLANTI TİPİ (B) | MOUNTING SIDE<br>BAĞLANTI | TORQUE<br>TORK<br>(Kgm / Nm) | POWER<br>GÜÇ<br>(Hp / Kw) | SPEED<br>DEVİR<br>(RPM) | RATIO<br>ORAN |
|---|---|---|---|---|---|---|---|
| 50318512P0 | PNEUMATIC<br>PNÖMATİK | UNI ADAPTER<br>ADAPTÖRLÜ UNI | SIDE<br>YAN | 34 Kgm<br>342 Nm | 28 Hp<br>21 Kw | 750 RPM | 1:1,7 |
| 50318522P0 | | ISO | | | | | |
| 50318532P0 | | FLANGE<br>ADAPTÖRLÜ FLANŞLI | | | | | |
| 50318542P0 | | SHAFT<br>ADAPTÖRLÜ ŞAFTLI | | | | | |

| GEARBOX / ANA ŞANZIMANLAR | USED VEHICLES / KULLANILAN BAZI ARAÇLAR |
|---|---|
| GR 801 | R94 - 94 -220 -94-260 - 110H - P93 - P94DB - HP 210 - HP220 SCANIA |

Seçeceğiniz pompanın dönüş yönü, P.T.O. dönüş yönü ile ters olmalıdır.
The rotation of the choosen pump has to be opposite with the rotation of P.T.O.

P.T.O. montaj edildikten sonra ana şanzıman yağını tamamlayın.
Fill the oil of the gear box after mounting the P.T.O.

# SCANIA GR871



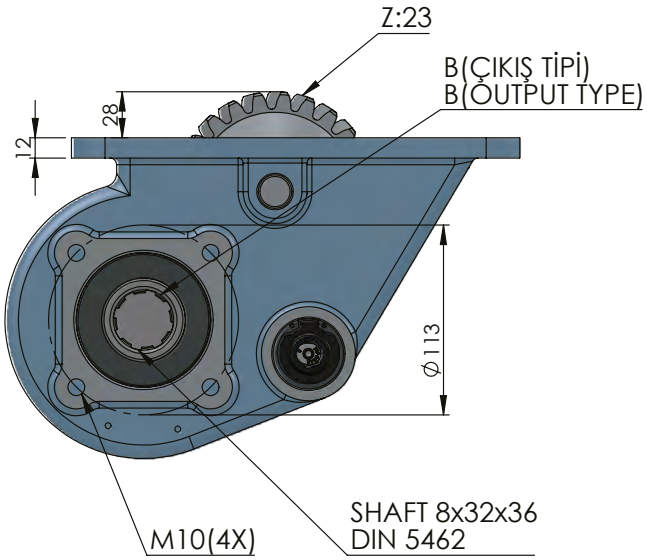


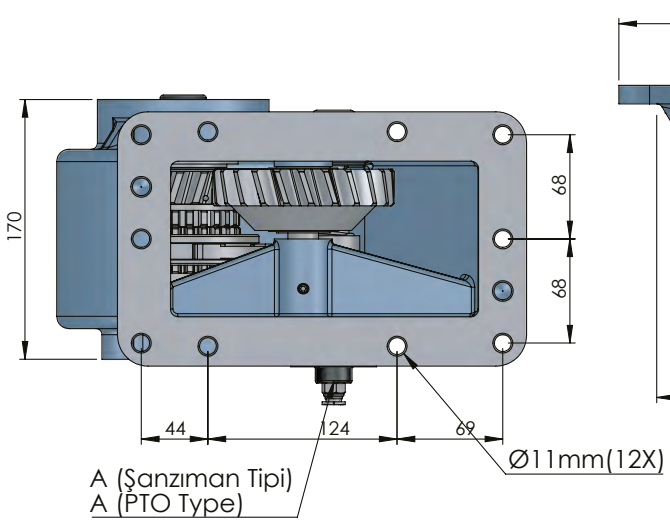


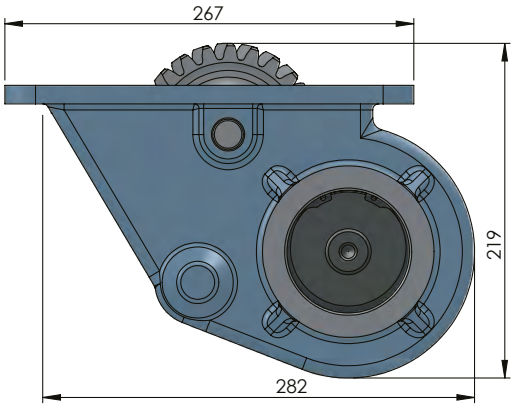


| CODE<br>KOD | TYPE<br>TİP (A) | MOUNTING TYPE<br>BAĞLANTI TİPİ (B) | MOUNTING SIDE<br>BAĞLANTI | TORQUE<br>TORK<br>(Kgm / Nm) | POWER<br>GÜÇ<br>(Hp / Kw) | SPEED<br>DEVİR<br>(RPM) | RATIO<br>ORAN |
|---|---|---|---|---|---|---|---|
| 50316512P0 | PNEUMATIC<br>PNÖMATİK | UNI ADAPTER<br>ADAPTÖRLÜ UNI | SIDE<br>YAN | 29 Kgm<br>284 Nm | 37,5 Hp<br>27,6 Kw | 1000 RPM | 1:1 |
| 50316522P0 | | ISO | | | | | |
| 50316532P0 | | FLANGE<br>ADAPTÖRLÜ FLANŞLI | | | | | |
| 50316542P0 | | SHAFT<br>ADAPTÖRLÜ ŞAFTLI | | | | | |

| GEARBOX / ANA ŞANZIMANLAR | USED VEHICLES / KULLANILAN BAZI ARAÇLAR |
|---|---|
| GR870-871 PTO SCANIA (1000 RPM, SAĞ) | P92-93-111-112C-113R-114H-142M-144L-93H-280-R113M |



Seçeceğiniz pompanın dönüş yönü, P.T.O. dönüş yönü ile ters olmalıdır.
The rotation of the choosen pump has to be opposite to the rotation of P.T.O.

P.T.O. montaj edildikten sonra ana şanzıman yağını tamamlayın.
Fill the oil of the gear box after mounting the P.T.O.

# SCANIA GR860

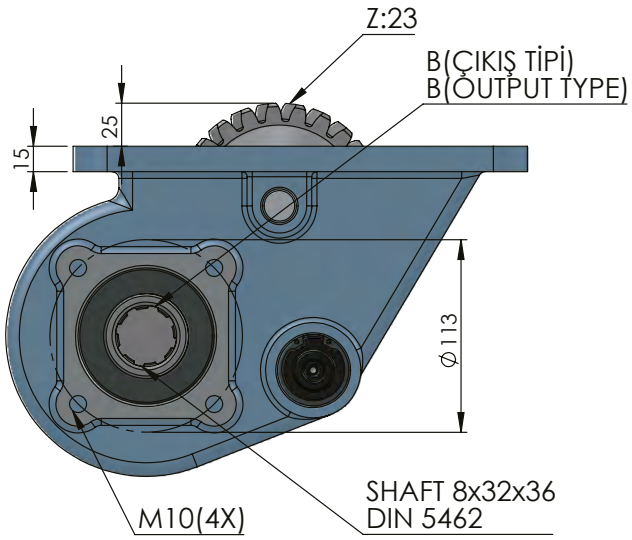




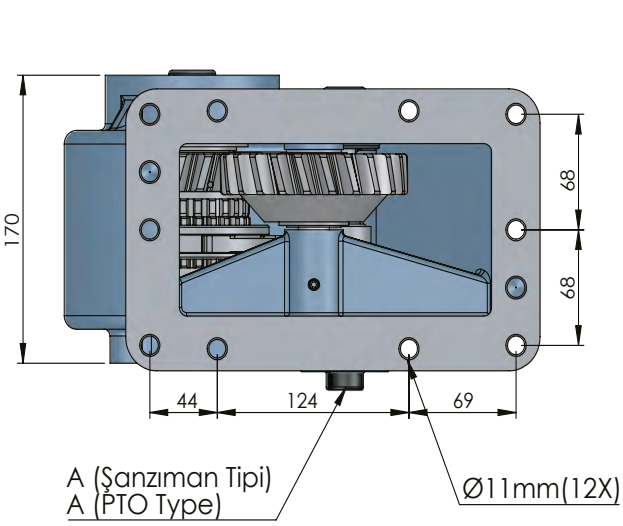


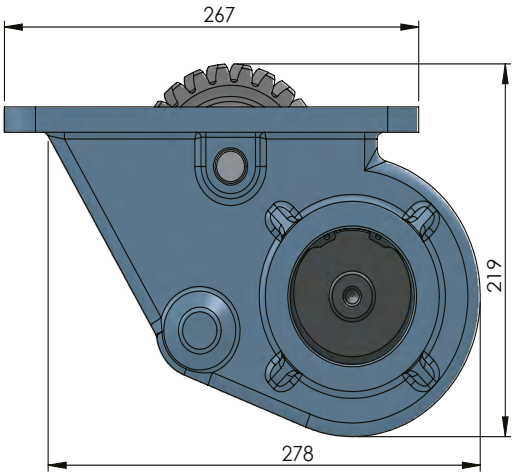


| CODE<br>KOD | TYPE<br>TİP (A) | MOUNTING TYPE<br>BAĞLANTI TİPİ (B) | MOUNTING SIDE<br>BAĞLANTI | TORQUE<br>TORK<br>(Kgm / Nm) | POWER<br>GÜÇ<br>(Hp / Kw) | SPEED<br>DEVİR<br>(RPM) | RATIO<br>ORAN |
|---|---|---|---|---|---|---|---|
| 50320512P0 | PNEUMATIC<br>PNÖMATİK | UNI ADAPTER<br>ADAPTÖRLÜ UNI | SIDE<br>YAN | 19 Kgm<br>185 Nm | 27 Hp<br>20,5 Kw | 750 RPM | 1:1,05 |
| 50320522P0 | | ISO | | | | | |
| 50320532P0 | | FLANGE<br>ADAPTÖRLÜ FLANŞLI | | | | | |
| 50320542P0 | | SHAFT<br>ADAPTÖRLÜ ŞAFTLI | | | | | |

| GEARBOX / ANA ŞANZIMANLAR | USED VEHICLES / KULLANILAN BAZI ARAÇLAR |
|---|---|
| GR 860 | L 111 - 82H - 110 - 111 - 112 - 113 - 140 - 141H-143 SCANIA |

Seçeceğiniz pompanın dönüş yönü, P.T.O. dönüş yönü ile ters olmalıdır.
The rotation of the choosen pump has to be opposite with the rotation of P.T.O.

P.T.O. montaj edildikten sonra ana şanzıman yağını tamamlayın.
Fill the oil of the gear box after mounting the P.T.O.

# SCANIA GS771



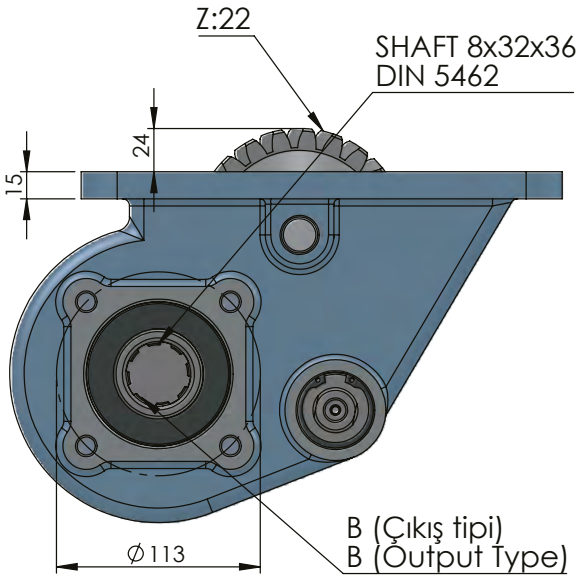


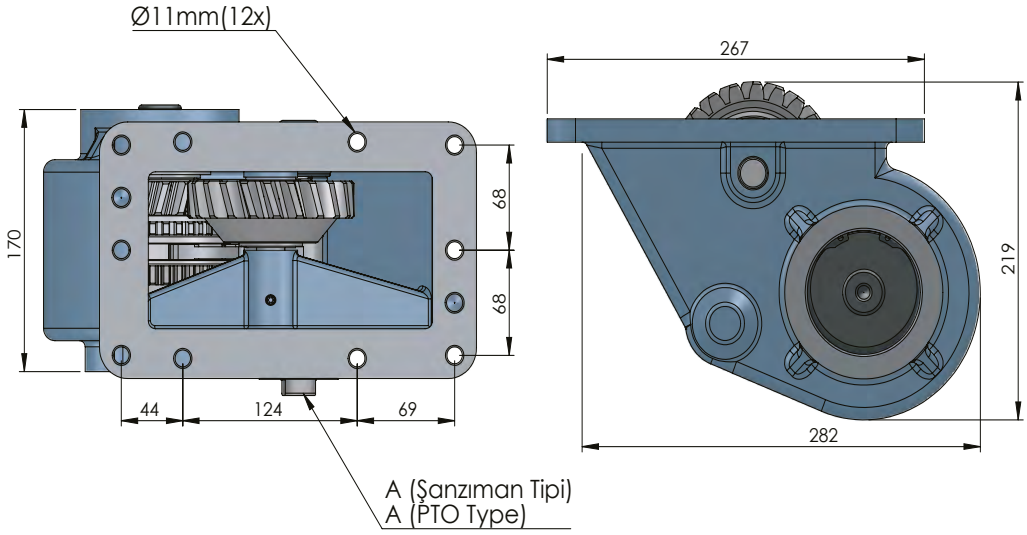


| CODE<br>KOD | TYPE<br>TİP (A) | MOUNTING TYPE<br>BAĞLANTI TİPİ (B) | MOUNTING SIDE<br>BAĞLANTI | TORQUE<br>TORK<br>(Kgm / Nm) | POWER<br>GÜÇ<br>(Hp / Kw) | SPEED<br>DEVİR<br>(RPM) | RATIO<br>ORAN |
|---|---|---|---|---|---|---|---|
| 50319512P0 | PNEUMATIC<br>PNÖMATİK | UNI ADAPTER<br>ADAPTÖRLÜ UNI | SIDE<br>YAN | 26 Kgm<br>250 Nm | 36 Hp<br>27 Kw | 1000 RPM | 1:0.95 |
| 50319522P0 | | ISO | | | | | |
| 50319532P0 | | FLANGE<br>ADAPTÖRLÜ FLANŞLI | | | | | |
| 50319542P0 | | SHAFT<br>ADAPTÖRLÜ ŞAFTLI | | | | | |

| GEARBOX / ANA ŞANZIMANLAR | USED VEHICLES / KULLANILAN BAZI ARAÇLAR |
|---|---|
| GS 770 - GS 771 - G 670 - GS 750 - GS 760 - GS 770 | 93-100H-111-112-113R-143P-82 H220-93 HG 230 SCANIA |



Seçeceğiniz pompanın dönüş yönü, P.T.O. dönüş yönü ile ters olmalıdır.
The rotation of the choosen pump has to be opposite to the rotation of P.T.O.

P.T.O. montaj edildikten sonra ana şanzıman yağını tamamlayın.
Fill the oil of the gear box after mounting the P.T.O.

# SCANIA GR880

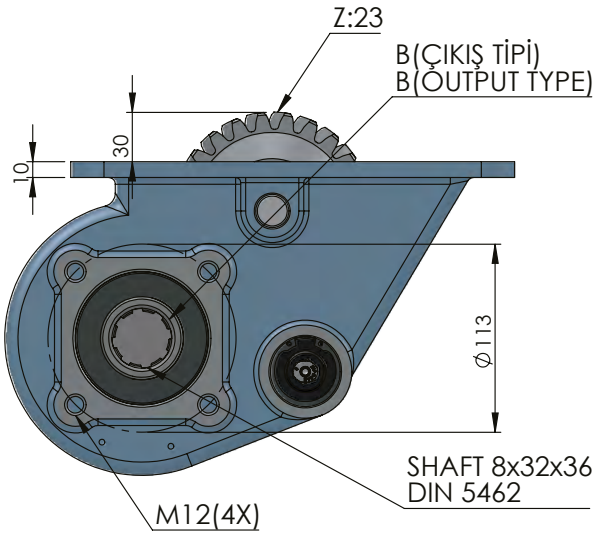




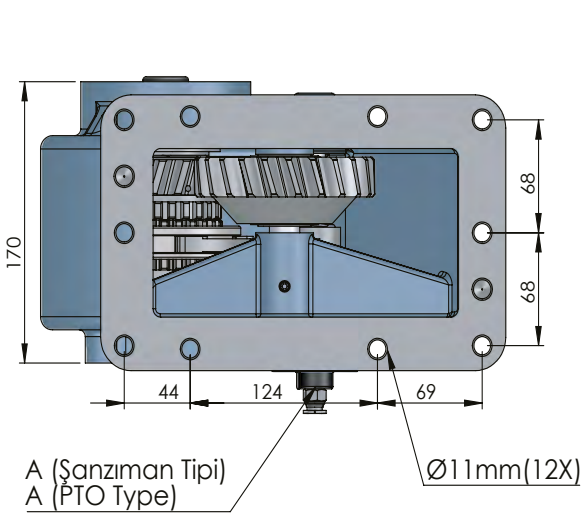


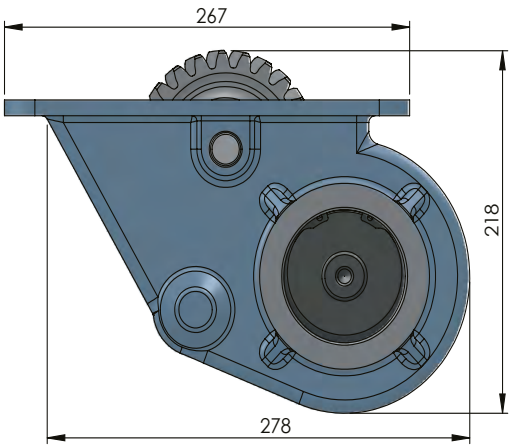


| CODE<br>KOD | TYPE<br>TİP (A) | MOUNTING TYPE<br>BAĞLANTI TİPİ (B) | MOUNTING SIDE<br>BAĞLANTI | TORQUE<br>TORK<br>(Kgm / Nm) | POWER<br>GÜÇ<br>(Hp / Kw) | SPEED<br>DEVİR<br>(RPM) | RATIO<br>ORAN |
|---|---|---|---|---|---|---|---|
| 50317512P0 | PNEUMATIC<br>PNÖMATİK | UNI ADAPTER<br>ADAPTÖRLÜ UNI | SIDE<br>YAN | 21.4 Kgm<br>210 Nm | 30 Hp<br>22 Kw | 1000 RPM | 1:1 |
| 50317522P0 | | ISO | | | | | |
| 50317532P0 | | FLANGE<br>ADAPTÖRLÜ FLANŞLI | | | | | |
| 50317542P0 | | SHAFT<br>ADAPTÖRLÜ ŞAFTLI | | | | | |

| GEARBOX / ANA ŞANZIMANLAR | USED VEHICLES / KULLANILAN BAZI ARAÇLAR |
|---|---|
| GR 880 - GRH 880 | P92 - 93 - 111 - 112C - 113R - 114H - 142M - 144L - 93H 280 - R113M PTO<br>SCANIA P 113M - P114 GA 380 - 114 P - 124 R- 113P - 114R -113H 360 |

Seçeceğiniz pompanın dönüş yönü, P.T.O. dönüş yönü ile ters olmalıdır.
The rotation of the choosen pump has to be opposite with the rotation of P.T.O.

P.T.O. montaj edildikten sonra ana şanzıman yağını tamamlayın.
Fill the oil of the gear box after mounting the P.T.O.

# FULLER 11609 ISO



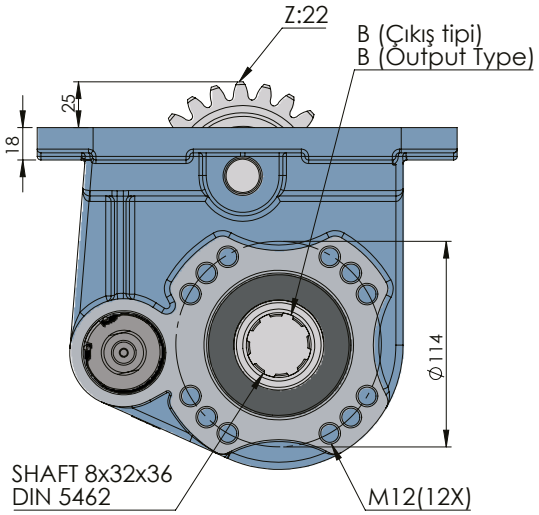


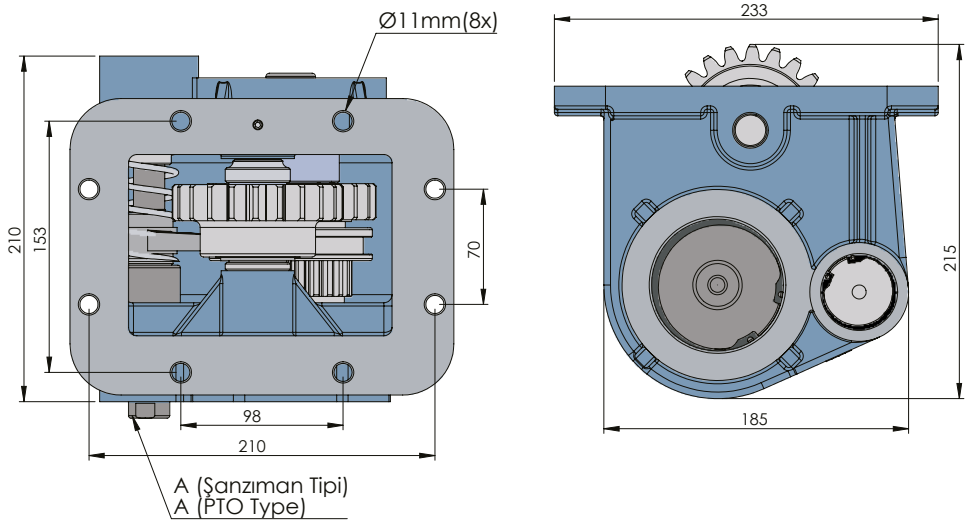


| CODE<br>KOD | TYPE<br>TİP (A) | MOUNTING TYPE<br>BAĞLANTI TİPİ (B) | MOUNTING<br>SİDE<br>BAĞLANTI | TORQUE<br>TORK<br>(Kgm / Nm) | POWER<br>GÜÇ<br>(Hp / Kw) | SPEED<br>DEVİR<br>(RPM) | RATIO<br>ORAN |
|---|---|---|---|---|---|---|---|
| 50510212P0 | PNEUMATIC<br>PNÖMATİK | UNI ADAPTER<br>ADAPTÖRLÜ UNI | BOTTOM<br>ALTTAN | 40 Kgm<br>392.4 Nm | 57.8 Hp<br>43.1 Kw | 1050 RPM | 1:1 |
| 50510222P0 | | ISO | | | | | |
| 50510232P0 | | FLANGE<br>ADAPTÖRLÜ FLANŞLI | | | | | |
| 50510242P0 | | SHAFT<br>ADAPTÖRLÜ ŞAFTLI | | | | | |

| GEARBOX / ANA ŞANZIMANLAR | USED VEHICLES / KULLANILAN BAZI ARAÇLAR |
|---|---|
| RTO 11609-11613-11709-12709-14609 MRTO / RTX 9509-9513-9710-11509-14613-15613-15615 A/B/H RT16108LL/FTS16108LL 16908LL(1050 RPM, SAĞ) | 19.361-26.321-26.240-26.280 MAN/180.24-280.26-190.26-190.30-190.35-190.42-198.38-240.36 -330.26-330.30-330.35-380E30 IVECO/270-26 FATİH BMC/DAF 85-2605-2800-2815-3030-3300 -3330-3600-4400- ERF E6-E8-E12-EC 14 LEYLAND/FODEN 4000/MAGIRUS/ 19.320-30.280 MAN / FIAT 619-697 |



Seçeceğiniz pompanın dönüş yönü, P.T.O. dönüş yönü ile ters olmalıdır.
The rotation of the choosen pump has to be opposite to the rotation of P.T.O.

P.T.O. montaj edildikten sonra ana şanzıman yağını tamamlayın.
Fill the oil of the gear box after mounting the P.T.O.

# FULLER 11609 UNI

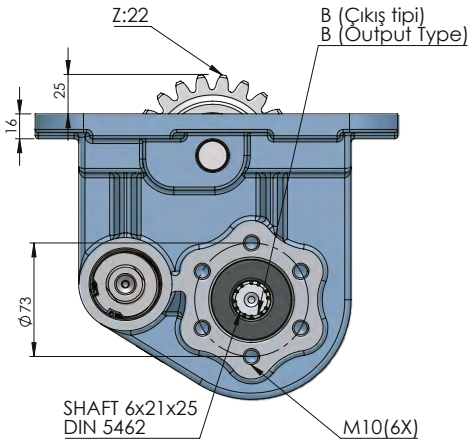




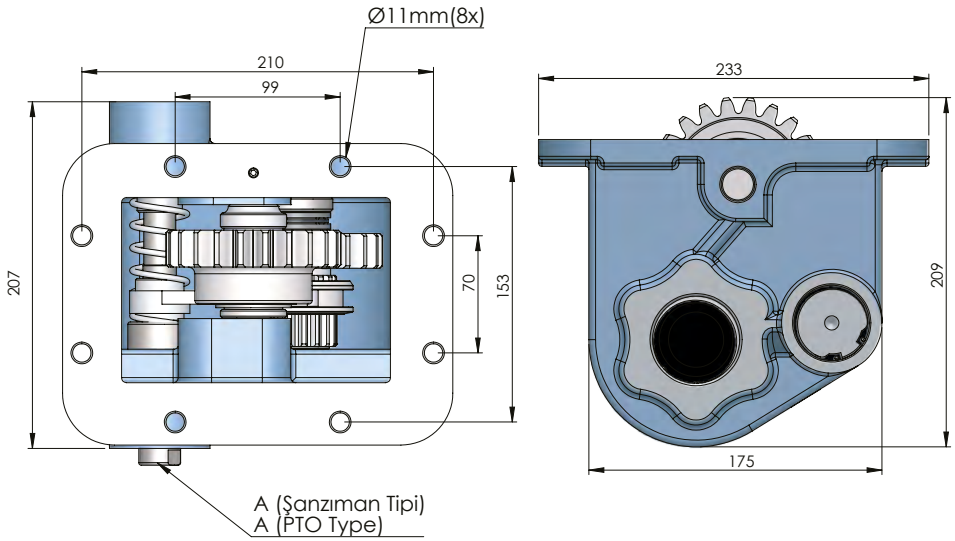


| CODE<br>KOD | TYPE<br>TİP (A) | MOUNTING TYPE<br>BAĞLANTI TİPİ (B) | MOUNTING SIDE<br>BAĞLANTI | TORQUE<br>TORK<br>(Kgm / Nm) | POWER<br>GÜÇ<br>(Hp / Kw) | SPEED<br>DEVİR<br>(RPM) | RATIO<br>ORAN |
|---|---|---|---|---|---|---|---|
| 50520212P0 | PNEUMATIC<br>PNÖMATİK | UNI | BOTTOM<br>ALTTAN | 40 Kgm<br>392.4 Nm | 57.8 Hp<br>43.1 Kw | 1050 RPM | 1:1 |
| 50520222P0 | | ISO ADAPTER<br>ADAPTÖRLÜ ISO | | | | | |
| 50520232P0 | | FLANGE<br>FLANŞLI | | | | | |
| 50520242P0 | | SHAFT<br>ŞAFTLI | | | | | |

| GEARBOX / ANA ŞANZIMANLAR | USED VEHICLES / KULLANILAN BAZI ARAÇLAR |
|---|---|
| RTO 11609-11613-11709-12709-14609 MRTO / RTX 9509-9513-9710-11509-14613-15613-15615 A/B/H RT16108LL/FTS16108LL 16908LL(1050 RPM, SAĞ) | 19.361-26.321-26.240-26.280 MAN/180.24-280.26-190.26-190.30-190.35-190.42-198.38-240.36 -330.26-330.30-330.35-380E30 IVECO/270-26 FATİH BMC/DAF 85-2605-2800-2815-3030-3300 -3330-3600-4400- ERF E6-E8-E12-EC 14 LEYLAND/FODEN 4000/MAGIRUS/ 19.320-30.280 MAN / FIAT 619-697 |

Seçeceğiniz pompanın dönüş yönü, P.T.O. dönüş yönü ile ters olmalıdır.
The rotation of the choosen pump has to be opposite with the rotation of P.T.O.

P.T.O. montaj edildikten sonra ana şanzıman yağını tamamlayın.
Fill the oil of the gear box after mounting the P.T.O.

# FULLER 11609 DOUBLE GEAR ISO

## FULLER 11609 AKTARMALI ISO



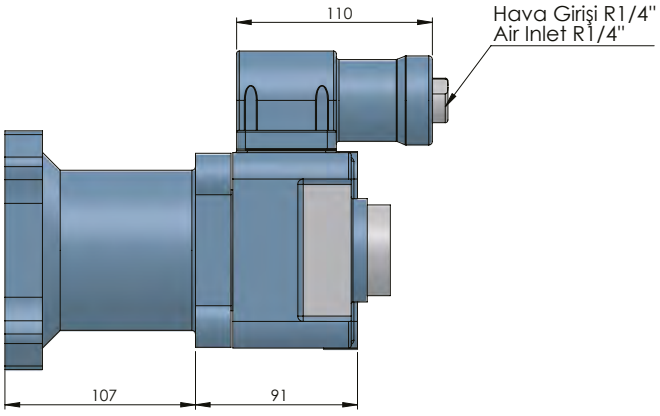


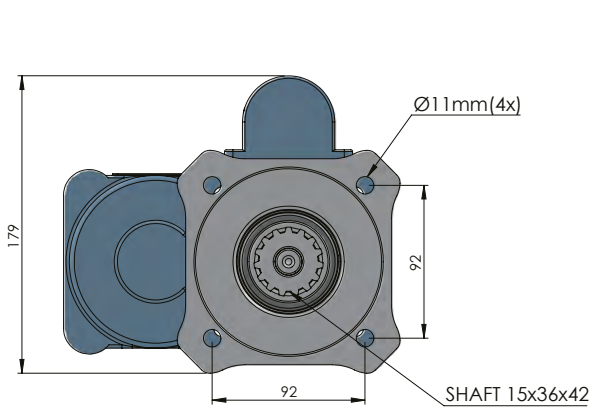


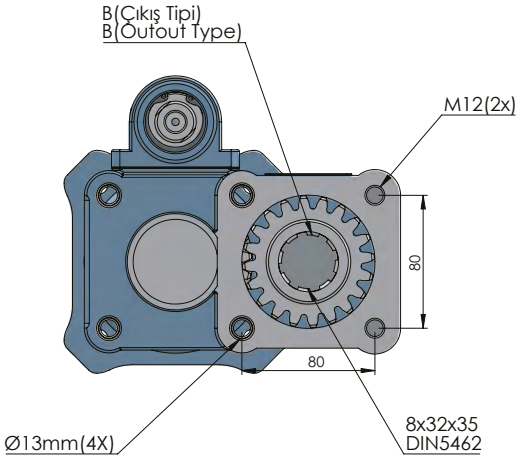


| CODE<br>KOD | TYPE<br>TİP (A) | MOUNTING TYPE<br>BAĞLANTI TİPİ (B) | MOUNTING SIDE<br>BAĞLANTI | TORQUE<br>TORK<br>(Kgm / Nm) | POWER<br>GÜÇ<br>(Hp / Kw) | SPEED<br>DEVİR<br>(RPM) | RATIO<br>ORAN |
|---|---|---|---|---|---|---|---|
| 50510311P0 | PNEUMATIC<br>PNÖMATİK | UNI ADAPTER<br>ADAPTÖRLÜ UNI | REAR<br>KUYRUK | 26.5 Kgm<br>260 Nm | 32.9 Hp<br>24.5 Kw | 900 RPM | 1:1.2 |
| 50510321P0 | | ISO | | | | | |
| 50510331P0 | | FLANGE<br>ADAPTÖRLÜ FLANŞLI | | | | | |
| 50510341P0 | | SHAFT<br>ADAPTÖRLÜ ŞAFTLI | | | | | |

| GEARBOX / ANA ŞANZIMANLAR | USED VEHICLES / KULLANILAN BAZI ARAÇLAR |
|---|---|
| EATON-PTO FULLER RT-RTF-RTO-RTX-RTOF-RTOX-MRT11609A-B RT-RTX-RTO-RTLO- RTOO-RTOOF-RTOOX 11509-14613-15613-15615 A-B-H / RTO-RTX 11709,12609 / RTO 11608 LL / RTX 11613 B/RT-RTX 11709 H-B / RT-RTF 910 / RTO 910 / RT1110 / RTO 1110 RT 7609 / RTO-RTX 7609 / RT-RTO 7613 / RT-RTF 9509 A-C RT-RTF-MRT-MRTO-RTO-RTOF 9509, 9513, 9710 A-B RT-RTO-RTX 12509,12513,12709 H,12710 B/RT-RTF-RTO-RTOF-RTLO- RTX 14608 LL,14609,14613,14710E (900 RPM, SOL) | 19.361-26.321-26.240-26.280 MAN / 180.24-180-26-190.26-190.30-190.35-190.42-298.38-240. 36-330.26-330.30-330.85-380E30 IVECO 70-26 FATIH BMC /DAF 85-26052800-2815-3030-3300 -3330-3600-4400 / ERF E6-E8-E12-EC 14 / LEYLAND / FODEN 4000 / MAGIRUS |

Seçeceğiniz pompanın dönüş yönü, P.T.O. dönüş yönü ile ters olmalıdır.
The rotation of the choosen pump has to be opposite to the rotation of P.T.O.

P.T.O. montaj edildikten sonra ana şanzıman yağını tamamlayın.
Fill the oil of the gear box after mounting the P.T.O.

# FULLER 15612 DOUBLE GEAR ISO

## FULLER 15612 AKTARMALI ISO

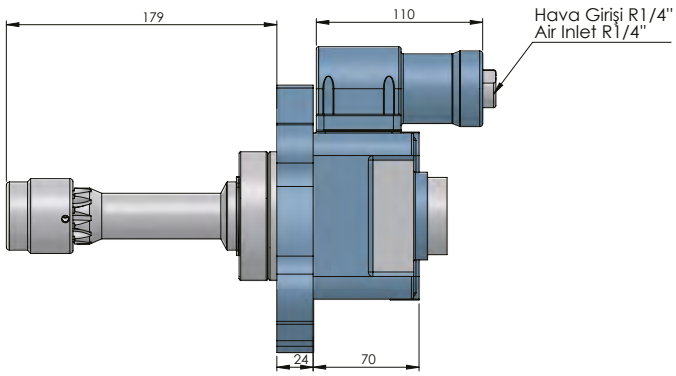




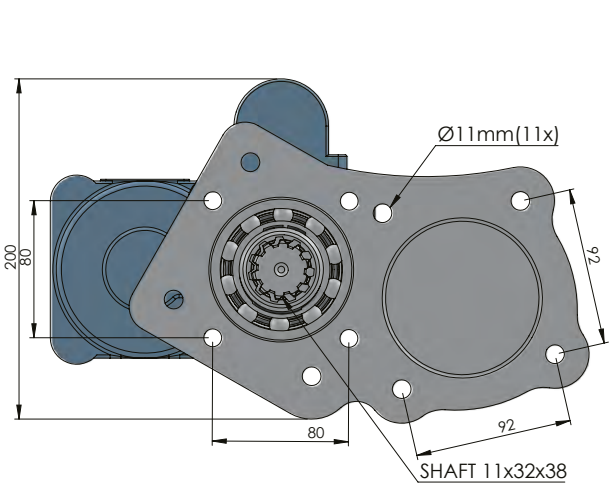


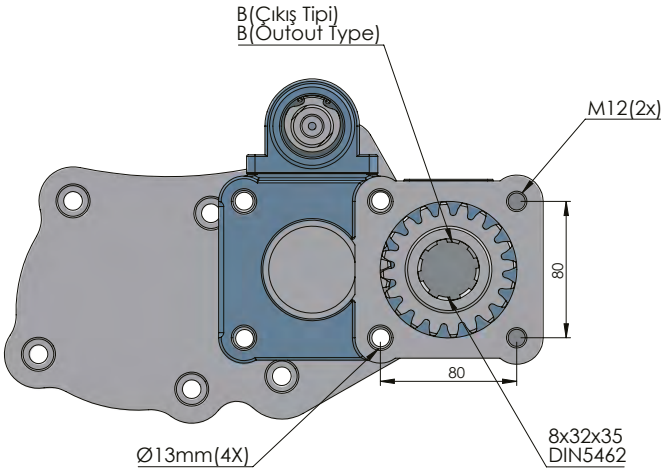


| CODE<br>KOD | TYPE<br>TİP (A) | MOUNTING TYPE<br>BAĞLANTI TİPİ (B) | MOUNTING SIDE<br>BAĞLANTI | TORQUE<br>TORK<br>(Kgm / Nm) | POWER<br>GÜÇ<br>(Hp / Kw) | SPEED<br>DEVİR<br>(RPM) | RATIO<br>ORAN |
|---|---|---|---|---|---|---|---|
| 50513311P0 | PNEUMATIC<br>PNÖMATİK | UNI ADAPTER<br>ADAPTÖRLÜ UNI | REAR<br>KUYRUK | 26.5 Kgm<br>260 Nm | 24.5 Hp<br>8.3 Kw | 675 RPM | 1:1.2 |
| 50513321P0 | | ISO | | | | | |
| 50513331P0 | | FLANGE<br>ADAPTÖRLÜ FLANŞLI | | | | | |
| 50513341P0 | | SHAFT<br>ADAPTÖRLÜ ŞAFTLI | | | | | |

| GEARBOX / ANA ŞANZIMANLAR | USED VEHICLES / KULLANILAN BAZI ARAÇLAR |
|---|---|
| EATON-PTO FULLER 11612-12612-13612-15612-14607-16612 A/H (675 RPM, SOL) | 440E42-720E37 EUROTECH-EUROTRACER-EUROSTAR / LEYLAND 80.330-85.330-85.400 DAF / 190.36-240.36 IVECO / FODEN 4275 SEDON ATKINSON 3.11 L25 / ERF E 14.35 TT -<br>EC10-EC 11 400E34 IVECO - SEDDON 23.405 / STEYR |

Seçeceğiniz pompanın dönüş yönü, P.T.O. dönüş yönü ile ters olmalıdır.
The rotation of the choosen pump has to be opposite with the rotation of P.T.O.

P.T.O. montaj edildikten sonra ana şanzıman yağını tamamlayın.
Fill the oil of the gear box after mounting the P.T.O.

# FULLER 17316 DOUBLE GEAR ISO

## FULLER 17316 AKTARMALI ISO



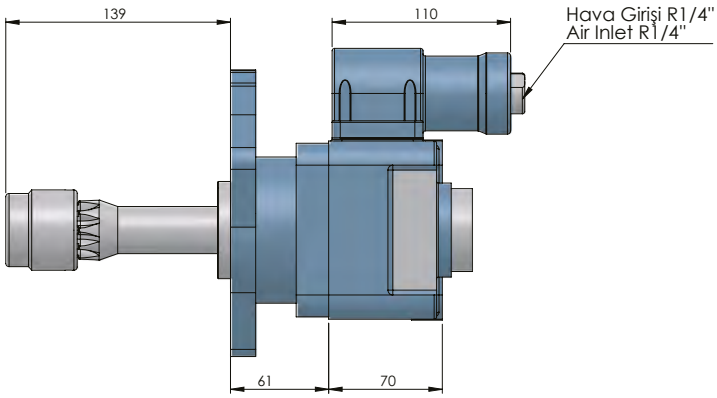


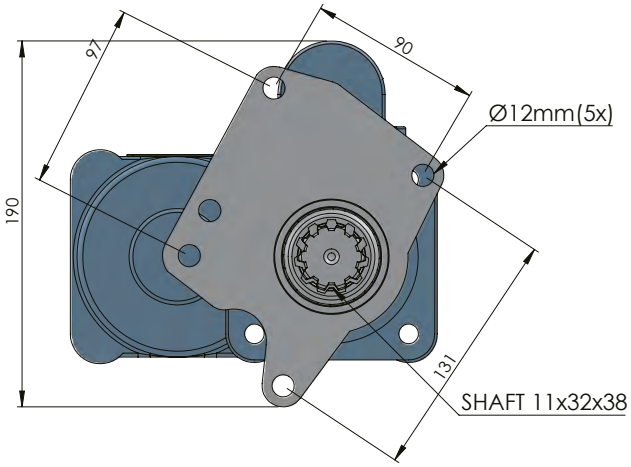


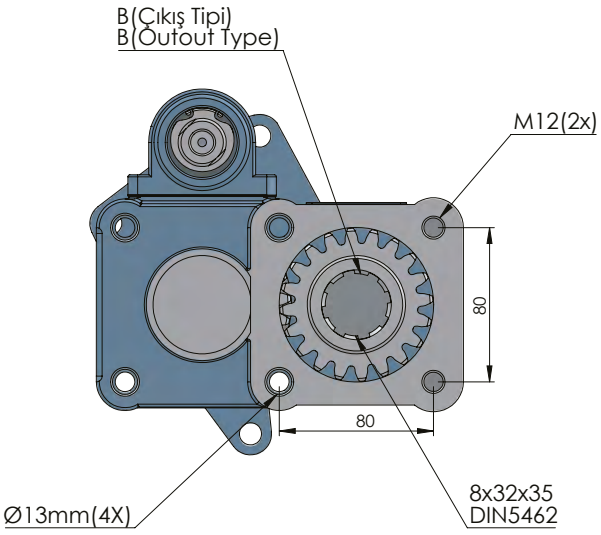


| CODE<br>KOD | TYPE<br>TİP (A) | MOUNTING TYPE<br>BAĞLANTI TİPİ (B) | MOUNTING SIDE<br>BAĞLANTI | TORQUE<br>TORK<br>(Kgm / Nm) | POWER<br>GÜÇ<br>(Hp / Kw) | SPEED<br>DEVİR<br>(RPM) | RATIO<br>ORAN |
|---|---|---|---|---|---|---|---|
| 50511311P0 | PNEUMATIC<br>PNÖMATİK | UNI ADAPTER<br>ADAPTÖRLÜ UNI | REAR<br>KUYRUK | 24 Kgm<br>235.4 Nm | 30.6 Hp<br>22.9 Kw | 1000 RPM | 1:1.2 |
| 50511321P0 | | ISO | | | | | |
| 50511331P0 | | FLANGE<br>ADAPTÖRLÜ FLANŞLI | | | | | |
| 50511341P0 | | SHAFT<br>ADAPTÖRLÜ ŞAFTLI | | | | | |

| GEARBOX / ANA ŞANZIMANLAR | USED VEHICLES / KULLANILAN BAZI ARAÇLAR |
|---|---|
| RTSO 12316-14316-15316-17316 A (1000 RPM, SOL) | 19.413 SLIENT 19.314-19.364-19.464-18.403-35.403-21.314 - 24.417-27.364 MAN 35.314- 35.414-37.464-41.414 -41.603-41.464-50.414 MAN/ERF EC11 / ERF E6-EC14 |



Seçeceğiniz pompanın dönüş yönü, P.T.O. dönüş yönü ile ters olmalıdır.
The rotation of the choosen pump has to be opposite to the rotation of P.T.O.

P.T.O. montaj edildikten sonra ana şanzıman yağını tamamlayın.
Fill the oil of the gear box after mounting the P.T.O.

# EATON 475 DOUBLE GEAR UNI

## EATON 475 AKTARMALI UNI

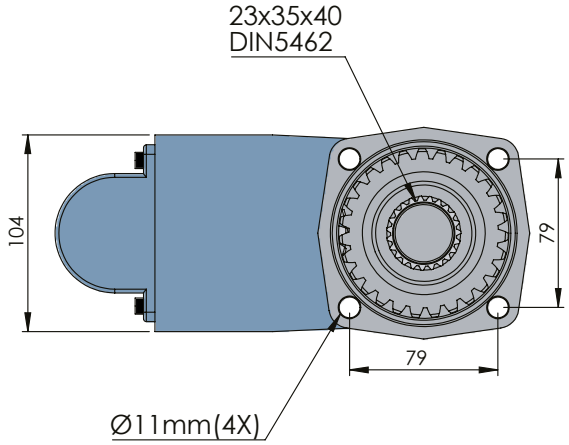




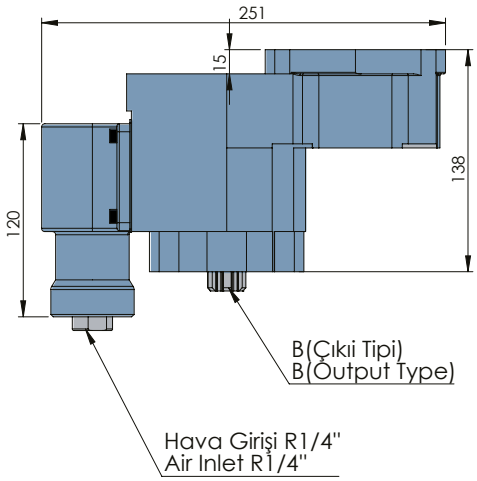


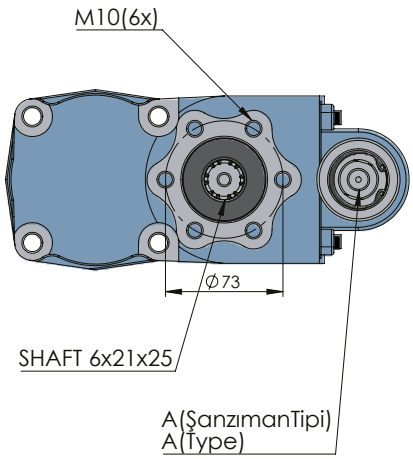


| CODE<br>KOD | TYPE<br>TİP (A) | MOUNTING TYPE<br>BAĞLANTI TİPİ (B) | MOUNTING SIDE<br>BAĞLANTI | TORQUE<br>TORK<br>(Kgm / Nm) | POWER<br>GÜÇ<br>(Hp / Kw) | SPEED<br>DEVİR<br>(RPM) | RATIO<br>ORAN |
|---|---|---|---|---|---|---|---|
| 50410311P0 | PNEUMATIC<br>PNÖMATİK | UNI | REAR<br>KUYRUK | 21,5 Kgm<br>210,9 Nm | 19,2 HP<br>14 Kw | 650 RPM | 1/1,12 |
| 50410321P0 | | ISO ADAPTER<br>ADAPTÖRLÜ ISO | | | | | |
| 50410331P0 | | FLANGE<br>FLANŞLI | | | | | |
| 50410341P0 | | SHAFT<br>ŞAFTLI | | | | | |

| GEARBOX / ANA ŞANZIMANLAR | USED VEHICLES / KULLANILAN BAZI ARAÇLAR |
|---|---|
| PTO EATON-HEMA 475 R SML-SMA-SMO-SME-CMA-CMO | 105.08-110.08-145.22 FATIH / 2014-2114-FORD CARGO 1800 INTER / 1212-1312 FORD (83-86) 1812-1814-2014-2117-2517 FORD (86) 140-1340 BMC / ZIL (RUS) |

Seçeceğiniz pompanın dönüş yönü, P.T.O. dönüş yönü ile ters olmalıdır.
The rotation of the choosen pump has to be opposite with the rotation of P.T.O.

P.T.O. montaj edildikten sonra ana şanzıman yağını tamamlayın.
Fill the oil of the gear box after mounting the P.T.O.

# EATON 475 RIGHT SIDE UNI

## EATON 475 SAĞ YAN UNI



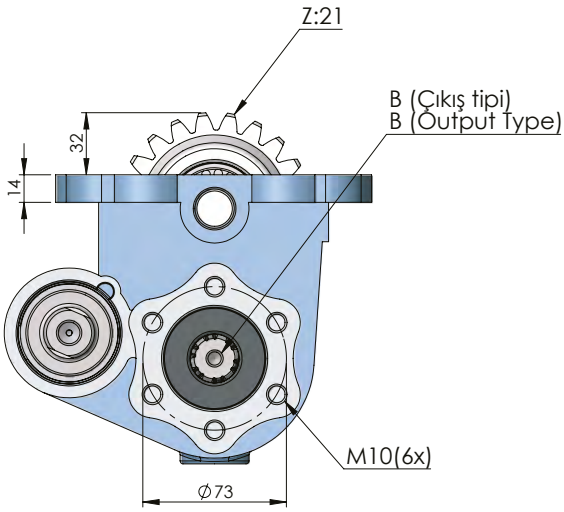


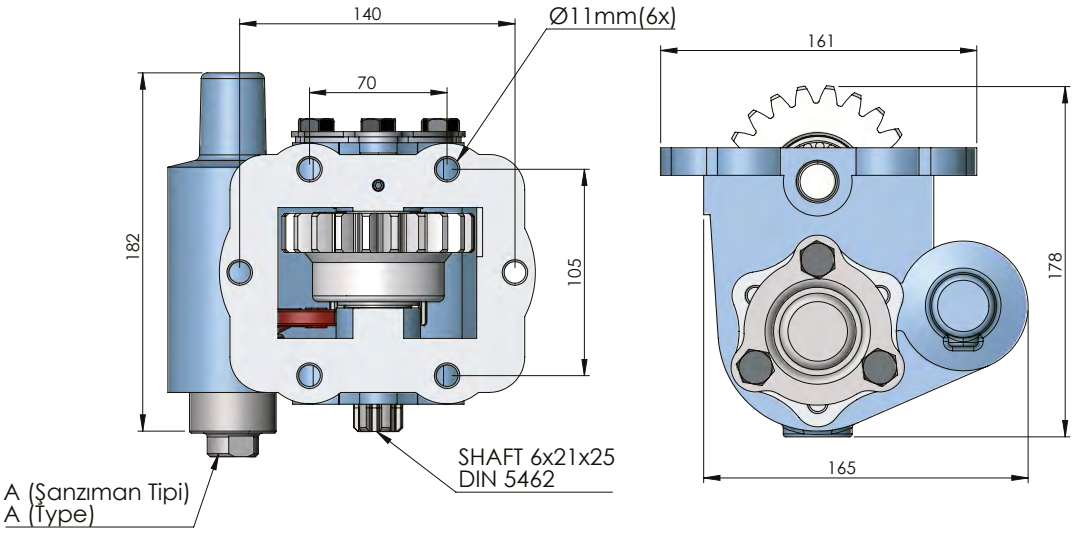


| CODE<br>KOD | TYPE<br>TİP (A) | MOUNTING TYPE<br>BAĞLANTI TİPİ (B) | MOUNTING SIDE<br>BAĞLANTI | TORQUE<br>TORK<br>(Kgm / Nm) | POWER<br>GÜÇ<br>(Hp / Kw) | SPEED<br>DEVİR<br>(RPM) | RATIO<br>ORAN |
|---|---|---|---|---|---|---|---|
| 50410512P0 | PNEUMATIC<br>PNÖMATİK | UNI | SIDE<br>YAN | 23 Kgm<br>225 Nm | 15,8 HP<br>11,8 Kw | 500 RPM | 1/1,5 |
| 50410522P0 | | ISO ADAPTER<br>ADAPTÖRLÜ ISO | | | | | |
| 50410532P0 | | FLANGE<br>FLANŞLI | | | | | |
| 50410542P0 | | SHAFT<br>ŞAFTLI | | | | | |

| GEARBOX / ANA ŞANZIMANLAR | USED VEHICLES / KULLANILAN BAZI ARAÇLAR |
|---|---|
| PTO EATON-HEMA 475 R SML-SMA-SMO-SME-CMA-CMO | 105.08-110.08-145.22 FATIH / 2014-2114-FORD CARGO 1800 INTER / 1212-1312 FORD (83-86) 1812-1814-2014-2117-2517 FORD (86) 140-1340 BMC / ZIL (RUS) |



Seçeceğiniz pompanın dönüş yönü, P.T.O. dönüş yönü ile ters olmalıdır.
The rotation of the choosen pump has to be opposite to the rotation of P.T.O.

P.T.O. montaj edildikten sonra ana şanzıman yağını tamamlayın.
Fill the oil of the gear box after mounting the P.T.O.

# EATON 570 UNI

## EATON 570 UNI

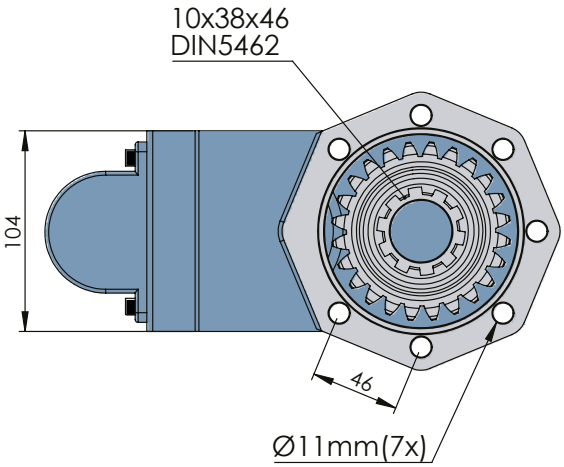




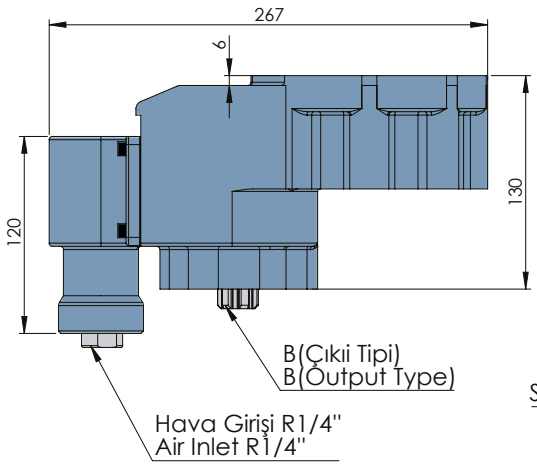


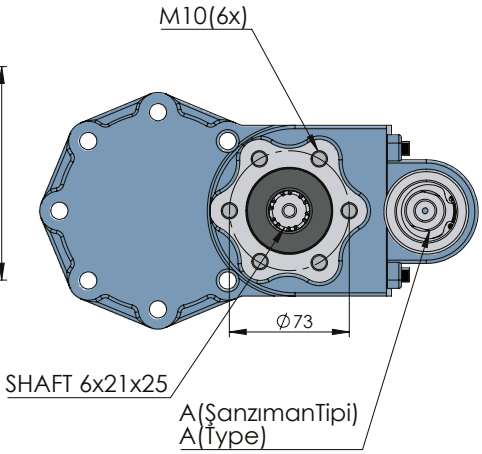


| CODE<br>KOD | TYPE<br>TİP (A) | MOUNTING TYPE<br>BAĞLANTI TİPİ (B) | MOUNTING<br>SİDE<br>BAĞLANTI | TORQUE<br>TORK<br>(Kgm / Nm) | POWER<br>GÜÇ<br>(Hp / Kw) | SPEED<br>DEVİR<br>(RPM) | RATIO<br>ORAN |
|---|---|---|---|---|---|---|---|
| 50411311P0 | PNEUMATIC<br>PNÖMATİK | UNI | REAR<br>KUYRUK | 25 Kgm<br>245 Nm | 22,4 HP<br>16,7 Kw | 650 RPM | 1/1,25 |
| 50411321P0 | | ISO ADAPTER<br>ADAPTÖRLÜ ISO | | | | | |
| 50411331P0 | | FLANGE<br>FLANŞLI | | | | | |
| 50411341P0 | | SHAFT<br>ŞAFTLI | | | | | |

| GEARBOX / ANA ŞANZIMANLAR | USED VEHICLES / KULLANILAN BAZI ARAÇLAR |
|---|---|
| PTO EATON-HEMA 570-542-640 R SMA-SMS-SMR-SMH-SMJ-CMA-CMR | 162.22-162.25-170.25- FATIH / 2114-2116-2517 FORD CARGO (86-96) 180 FATIH BMC BEDFORD GENETO / 1830 INTER / 1850 YAVUZ |

Seçeceğiniz pompanın dönüş yönü, P.T.O. dönüş yönü ile ters olmalıdır.
The rotation of the choosen pump has to be opposite with the rotation of P.T.O.

P.T.O. montaj edildikten sonra ana şanzıman yağını tamamlayın.
Fill the oil of the gear box after mounting the P.T.O.

# EATON 570 LEFT SIDE UNI

## EATON 570 SOL YAN UNI



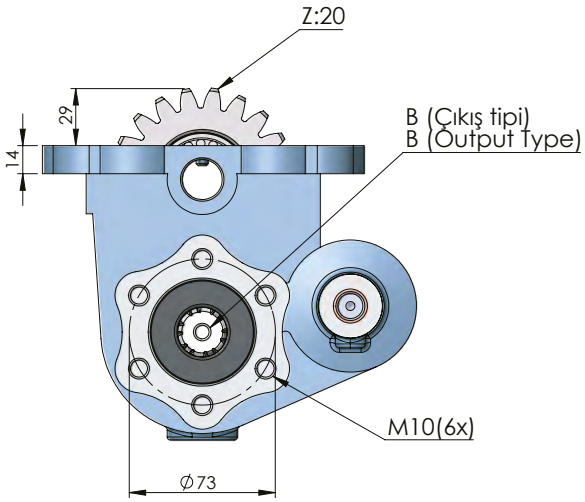


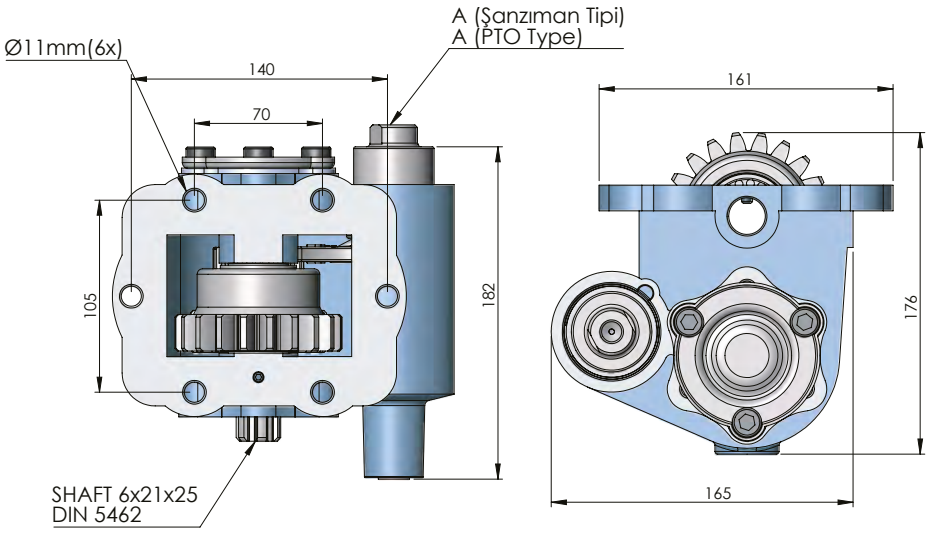


| CODE<br>KOD | TYPE<br>TİP (A) | MOUNTING TYPE<br>BAĞLANTI TİPİ (B) | MOUNTING<br>SİDE<br>BAĞLANTI | TORQUE<br>TORK<br>(Kgm / Nm) | POWER<br>GÜÇ<br>(Hp / Kw) | SPEED<br>DEVİR<br>(RPM) | RATIO<br>ORAN |
|---|---|---|---|---|---|---|---|
| 50411311P0 | PNEUMATIC<br>PNÖMATİK | UNI | REAR<br>KUYRUK | 25 Kgm<br>245 Nm | 22,4 HP<br>16,7 Kw | 650 RPM | 1/1,25 |
| 50411321P0 | | ISO ADAPTER<br>ADAPTÖRLÜ ISO | | | | | |
| 50411331P0 | | FLANGE<br>FLANŞLI | | | | | |
| 50411341P0 | | SHAFT<br>ŞAFTLI | | | | | |

| GEARBOX / ANA ŞANZIMANLAR | USED VEHICLES / KULLANILAN BAZI ARAÇLAR |
|---|---|
| PTO EATON-HEMA 570-542-640 R SMA-SMS-SMR-SMH-SMJ-CMA-CMR | 162.22-162.25-170.25- FATIH / 2114-2116-2517 FORD CARGO (86-96) 180 FATIH BMC BEDFORD GENETO / 1830 INTER / 1850 YAVUZ |



Seçeceğiniz pompanın dönüş yönü, P.T.O. dönüş yönü ile ters olmalıdır.
The rotation of the choosen pump has to be opposite to the rotation of P.T.O.

P.T.O. montaj edildikten sonra ana şanzıman yağını tamamlayın.
Fill the oil of the gear box after mounting the P.T.O.

# EATON 570 RIGHT SIDE UNI

## EATON 570 SAĞ YAN UNI

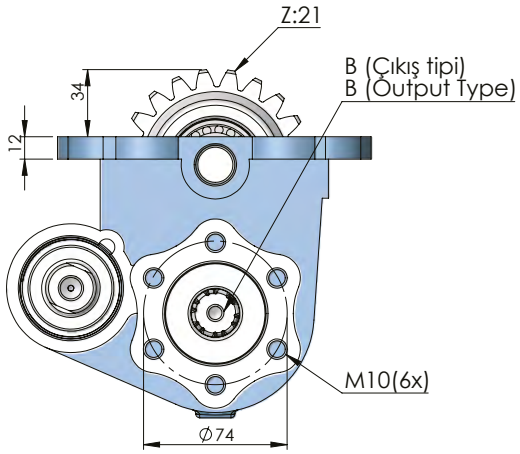




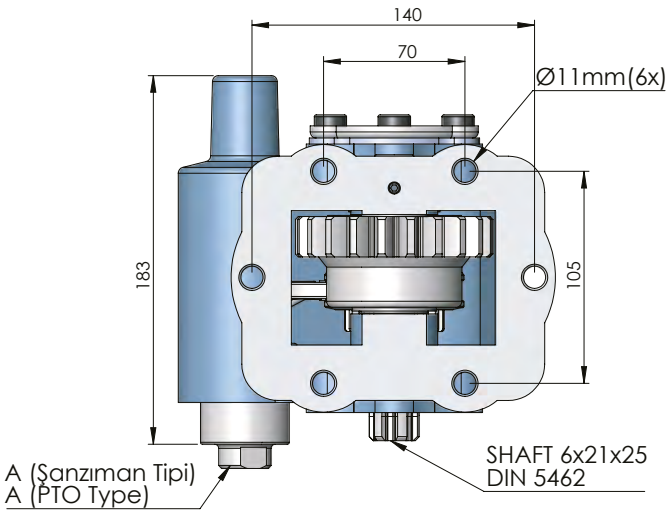


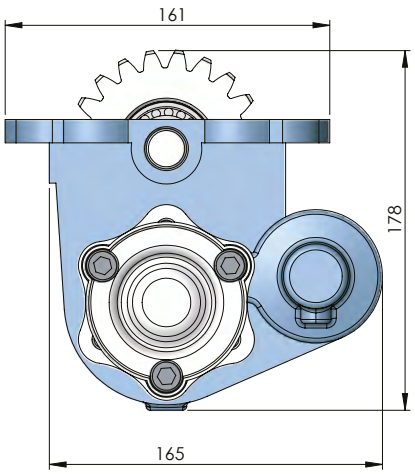


| CODE<br>KOD | TYPE<br>TİP (A) | MOUNTING TYPE<br>BAĞLANTI TİPİ (B) | MOUNTING SIDE<br>BAĞLANTI | TORQUE<br>TORK<br>(Kgm / Nm) | POWER<br>GÜÇ<br>(Hp / Kw) | SPEED<br>DEVİR<br>(RPM) | RATIO<br>ORAN |
|---|---|---|---|---|---|---|---|
| 50411512P0 | PNEUMATIC<br>PNÖMATİK | UNI | RIGHT SIDE<br>SAĞ YAN | 25 Kgm<br>245 Nm | 17,2 HP<br>12,8 Kw | 500 RPM | 1/1,25 |
| 50411522P0 | | ISO ADAPTER<br>ADAPTÖRLÜ ISO | | | | | |
| 50411532P0 | | FLANGE<br>FLANŞLI | | | | | |
| 50411542P0 | | SHAFT<br>ŞAFTLI | | | | | |

| GEARBOX / ANA ŞANZIMANLAR | USED VEHICLES / KULLANILAN BAZI ARAÇLAR |
|---|---|
| PTO EATON-HEMA 570-542-640 R SMA-SMS-SMR-SMH-SMJ-CMA-CMR | 162.22-162.25-170.25- FATIH / 2114-2116-2517 FORD CARGO (86-96) 180 FATIH BMC<br>BEDFORD GENETO / 1830 INTER / 1850 YAVUZ |

Seçeceğiniz pompanın dönüş yönü, P.T.O. dönüş yönü ile ters olmalıdır.
The rotation of the choosen pump has to be opposite with the rotation of P.T.O.

P.T.O. montaj edildikten sonra ana şanzıman yağını tamamlayın.
Fill the oil of the gear box after mounting the P.T.O.

# EATON 6406 SIDE UNI

## EATON 6406 YAN UNI



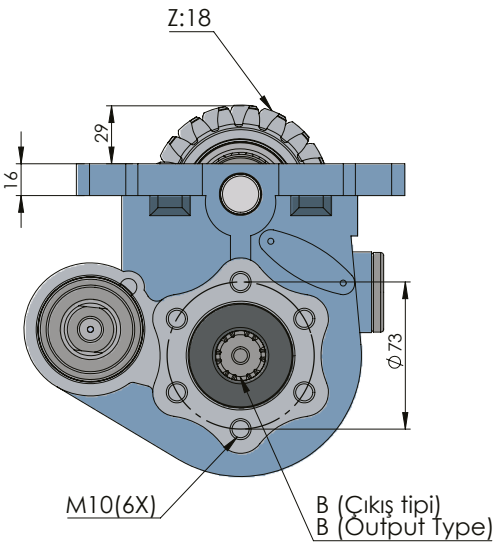


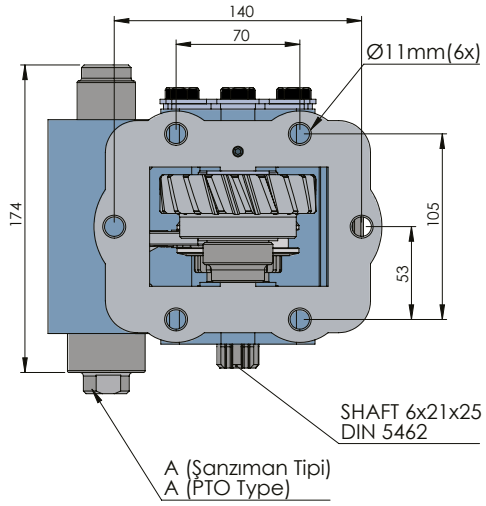


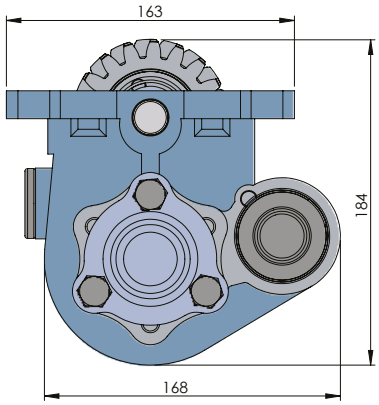


| CODE<br>KOD | TYPE<br>TİP (A) | MOUNTING TYPE<br>BAĞLANTI TİPİ (B) | MOUNTING SIDE<br>BAĞLANTI | TORQUE<br>TORK<br>(Kgm / Nm) | POWER<br>GÜÇ<br>(Hp / Kw) | SPEED<br>DEVİR<br>(RPM) | RATIO<br>ORAN |
|---|---|---|---|---|---|---|---|
| 50422512P0 | PNEUMATIC<br>PNÖMATİK | UNI | SIDE<br>YAN | 24Kgm<br>230 Nm | 32Hp<br>24 Kw | 2000 RPM | 01:01 |
| 50422522P0 | | ISO ADAPTER<br>ADAPTÖRLÜ ISO | | | | | |
| 50422532P0 | | FLANGE<br>FLANŞLI | | | | | |
| 50422542P0 | | SHAFT<br>ŞAFTLI | | | | | |

| GEARBOX / ANA ŞANZIMANLAR | USED VEHICLES / KULLANILAN BAZI ARAÇLAR |
|---|---|
| FS 6306 A_FS 5306 A _ 6406 | BMC -CHRYSLER -FORD -RENAULT |



Seçeceğiniz pompanın dönüş yönü, P.T.O. dönüş yönü ile ters olmalıdır.
The rotation of the choosen pump has to be opposite to the rotation of P.T.O.

P.T.O. montaj edildikten sonra ana şanzıman yağını tamamlayın.
Fill the oil of the gear box after mounting the P.T.O.

# EATON 4106 DOUBLE GEAR ISO
## EATON 4106 AKTARMALI ISO

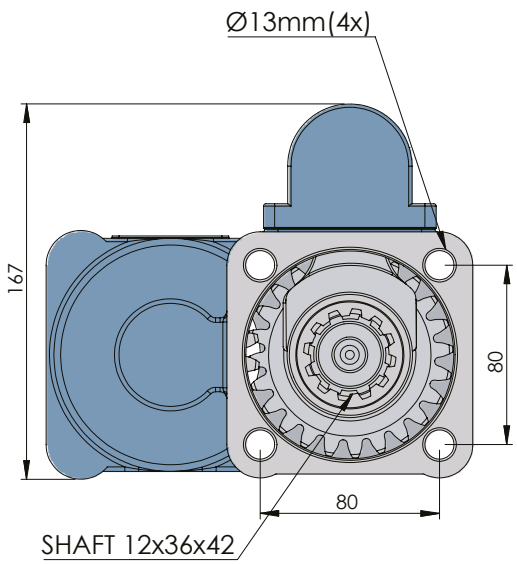




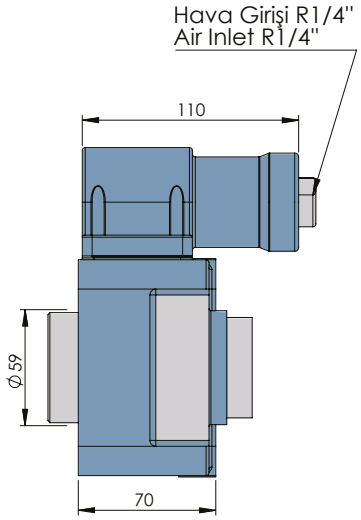


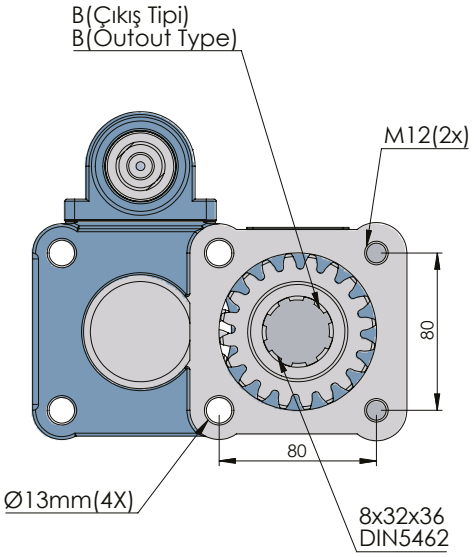


| CODE<br>KOD | TYPE<br>TİP (A) | MOUNTING TYPE<br>BAĞLANTI TİPİ (B) | MOUNTING SIDE<br>BAĞLANTI | TORQUE<br>TORK<br>(Kgm / Nm) | POWER<br>GÜÇ<br>(Hp / Kw) | SPEED<br>DEVİR<br>(RPM) | RATIO<br>ORAN |
|---|---|---|---|---|---|---|---|
| 50412311P0 | PNEUMATIC<br>PNÖMATİK | UNI ADAPTER<br>ADAPTÖRLÜ UNI | REAR<br>KUYRUK | 26,5 Kgm<br>260 Nm | 24,5 HP<br>18,3 Kw | 675 RPM | 1/1,2 |
| 50412321P0 | | ISO | | | | | |
| 50412331P0 | | FLANGE<br>ADAPTÖRLÜ FLANŞLI | | | | | |
| 50412341P0 | | SHAFT<br>ADAPTÖRLÜ ŞAFTLI | | | | | |

| GEARBOX / ANA ŞANZIMANLAR | USED VEHICLES / KULLANILAN BAZI ARAÇLAR |
|---|---|
| PTO EATON FS/FSO/H/V 4106-5206 A/B/H | 180-617-620-622 BMC PRO / 200.26-180 FATIH BMC2520 FORD CARGO / AS 950 / CHRYSLER 180.12-210-220 CD-320 MIDLUM RENAULT /FODEN 2000 /ERF E6.18 / 1415-1718 FORD 8.163- 8.224-18-224 MAN/ FEDON ATKINSON E6.11 / |

Seçeceğiniz pompanın dönüş yönü, P.T.O. dönüş yönü ile ters olmalıdır.
The rotation of the choosen pump has to be opposite with the rotation of P.T.O.

P.T.O. montaj edildikten sonra ana şanzıman yağını tamamlayın.
Fill the oil of the gear box after mounting the P.T.O.

# EATON 4106 DOUBLE GEAR UNI

## EATON 4106 GRUBA SABİT AKTARMALI UNI



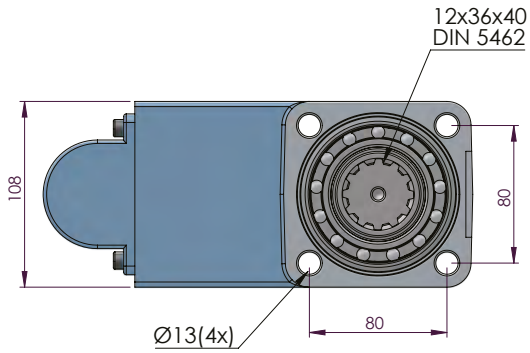


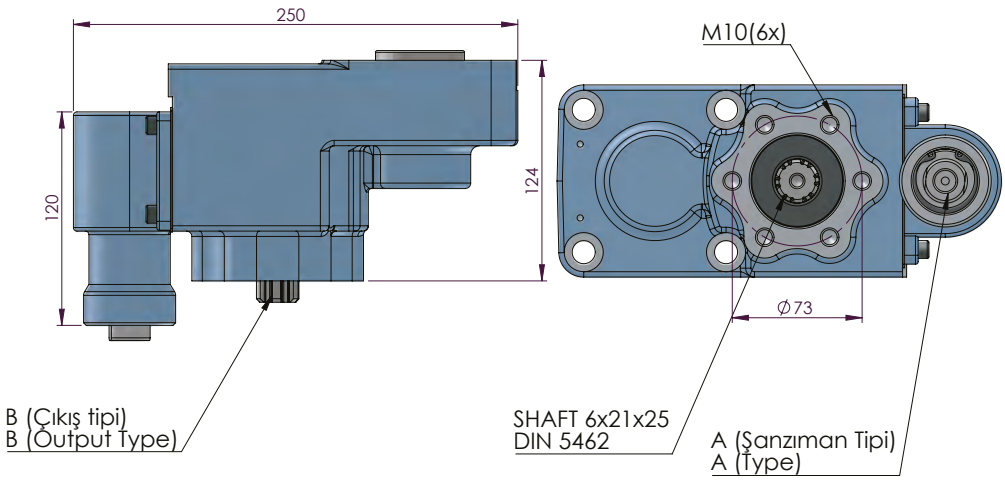


| CODE<br>KOD | TYPE<br>TİP (A) | MOUNTING TYPE<br>BAĞLANTI TİPİ (B) | MOUNTING SIDE<br>BAĞLANTI | TORQUE<br>TORK<br>(Kgm / Nm) | POWER<br>GÜÇ<br>(Hp / Kw) | SPEED<br>DEVİR<br>(RPM) | RATIO<br>ORAN |
|---|---|---|---|---|---|---|---|
| 50413311P0 | PNEUMATIC<br>PNÖMATİK | UNI | REAR<br>KUYRUK | 22,4 Kgm<br>219,7 Nm | 18,5 HP<br>13,8 Kw | 600 RPM | 1/1,12 |
| 50413321P0 | | ISO ADAPTER<br>ADAPTÖRLÜ ISO | | | | | |
| 50413331P0 | | FLANGE<br>FLANŞLI | | | | | |
| 50413341P0 | | SHAFT<br>ŞAFTLI | | | | | |

| GEARBOX / ANA ŞANZIMANLAR | USED VEHICLES / KULLANILAN BAZI ARAÇLAR |
|---|---|
| PTO EATON FS/FSO/H/V 4106-5206 A/B/H | 80-617-620-622 BMC PRO / 200.26-180 FATIH BMC2520 FORD CARGO / AS 950 / CHRYSLER 180.12-210-220 CD-320 MIDLUM RENAULT / FODEN 2000 /ERF E6.18 / 1415-1718 FORD 8.163- 8.224-18-224 MAN/ FEDON ATKINSON E6.11 / |



Seçeceğiniz pompanın dönüş yönü, P.T.O. dönüş yönü ile ters olmalıdır.
The rotation of the choosen pump has to be opposite to the rotation of P.T.O.

P.T.O. montaj edildikten sonra ana şanzıman yağını tamamlayın.
Fill the oil of the gear box after mounting the P.T.O.

# EATON 4106 SIDE UNI

## EATON 4106 YAN UNI

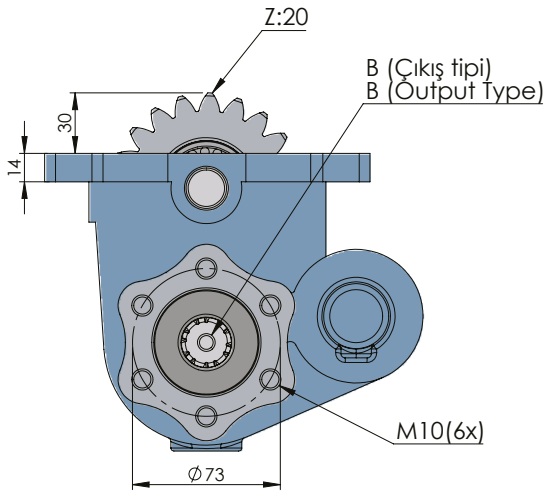




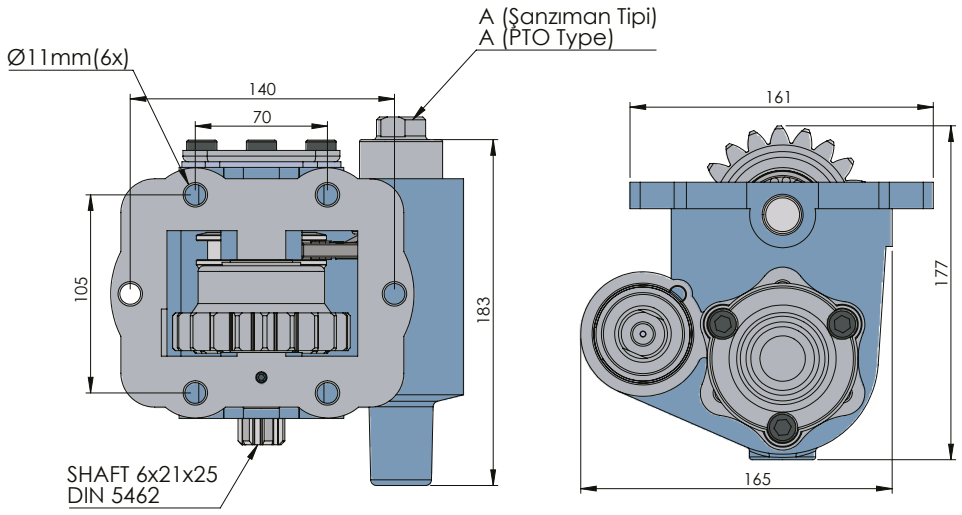


| CODE<br>KOD | TYPE<br>TİP (A) | MOUNTING TYPE<br>BAĞLANTI TİPİ (B) | MOUNTING SIDE<br>BAĞLANTI | TORQUE<br>TORK<br>(Kgm / Nm) | POWER<br>GÜÇ<br>(Hp / Kw) | SPEED<br>DEVİR<br>(RPM) | RATIO<br>ORAN |
|---|---|---|---|---|---|---|---|
| 50413511P0 | PNEUMATIC<br>PNÖMATİK | UNI | LEFT SIDE<br>SOL YAN | 21 Kgm<br>206 Nm | 10,7 HP<br>8,1 Kw | 375 RPM | 1/1,25 |
| 50413521P0 | | ISO ADAPTER<br>ADAPTÖRLÜ ISO | | | | | |
| 50413531P0 | | FLANGE<br>FLANŞLI | | | | | |
| 50413541P0 | | SHAFT<br>ŞAFTLI | | | | | |

| GEARBOX / ANA ŞANZIMANLAR | USED VEHICLES / KULLANILAN BAZI ARAÇLAR |
|---|---|
| PTO EATON FS/FSO/H/V 4106-5206 A/B/H | 180-617-620-622 BMC PRO / 200.26-180 FATIH BMC2520 FORD CARGO / AS 950 / CHRYSLER 180.12-210-220 CD-320 MIDLUM RENAULT /FODEN 2000 /ERF E6.18 / 1415-1718 FORD 8.163- 8.224-18-224 MAN/ FEDON ATKINSON E6.11 / |

Seçeceğiniz pompanın dönüş yönü, P.T.O. dönüş yönü ile ters olmalıdır.
The rotation of the choosen pump has to be opposite with the rotation of P.T.O.

P.T.O. montaj edildikten sonra ana şanzıman yağını tamamlayın.
Fill the oil of the gear box after mounting the P.T.O.

# EATON 4106 HELIX SIDE UNI

## EATON 4106 HELİS YAN UNI



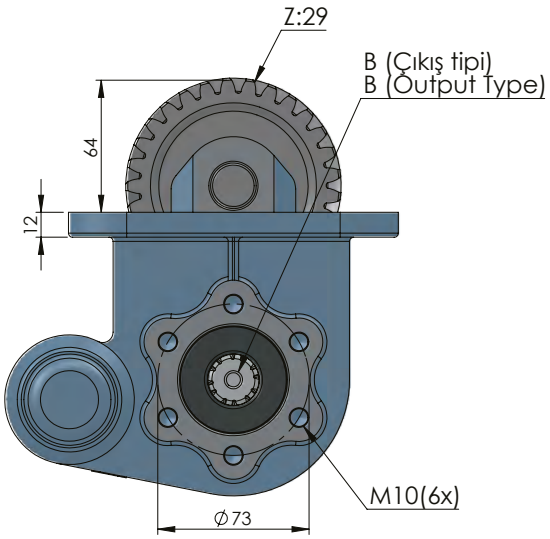


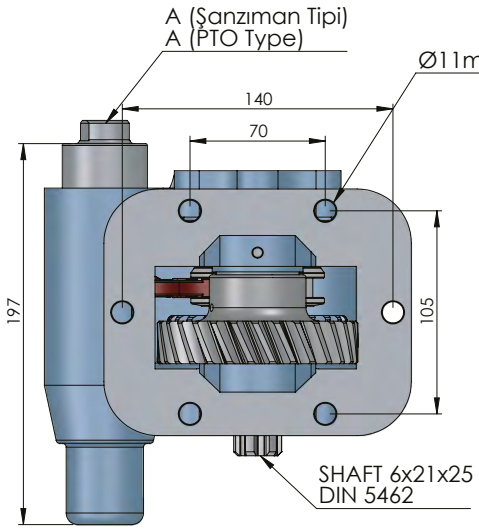


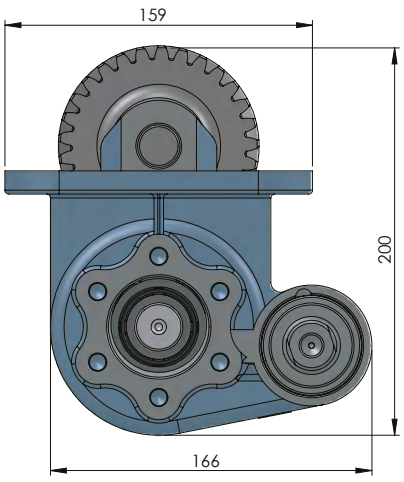


| CODE<br>KOD | TYPE<br>TİP (A) | MOUNTING TYPE<br>BAĞLANTI TİPİ (B) | MOUNTING SIDE<br>BAĞLANTI | TORQUE<br>TORK<br>(Kgm / Nm) | POWER<br>GÜÇ<br>(Hp / Kw) | SPEED<br>DEVİR<br>(RPM) | RATIO<br>ORAN |
|---|---|---|---|---|---|---|---|
| 50412512P0 | PNEUMATIC<br>PNÖMATİK | UNI | SIDE<br>YAN | 25 Kgm<br>245 Nm | 26,8 HP<br>20 Kw | 750 RPM | 1/1,16 |
| 50412522P0 | | ISO ADAPTER<br>ADAPTÖRLÜ ISO | | | | | |
| 50412532P0 | | FLANGE<br>FLANŞLI | | | | | |
| 50412542P0 | | SHAFT<br>ŞAFTLI | | | | | |

| GEARBOX / ANA ŞANZIMANLAR | USED VEHICLES / KULLANILAN BAZI ARAÇLAR |
|---|---|
| PTO EATON FS/FSO/H/V 4106-5206 A/B/H | 180-617-620-622 BMC PRO / 200.26-180 FATIH BMC2520 FORD CARGO / AS 950 / CHRYSLER 180.12-210-220 CD-320 MIDLUM RENAULT /FODEN 2000 /ERF E6.18 / 1415-1718 FORD 8.163- 8.224-18-224 MAN/ FEDON ATKINSON E6.11 / |



Seçeceğiniz pompanın dönüş yönü, P.T.O. dönüş yönü ile ters olmalıdır.
The rotation of the choosen pump has to be opposite to the rotation of P.T.O.

P.T.O. montaj edildikten sonra ana şanzıman yağını tamamlayın.
Fill the oil of the gear box after mounting the P.T.O.

# EATON 6109 DOUBLE GEAR ISO

## EATON 6109 AKTARMALI ISO

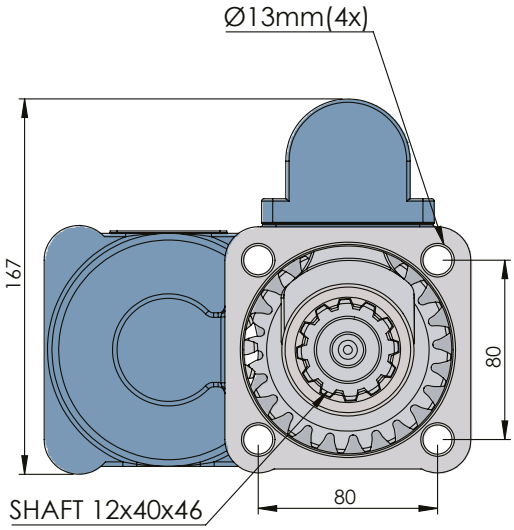




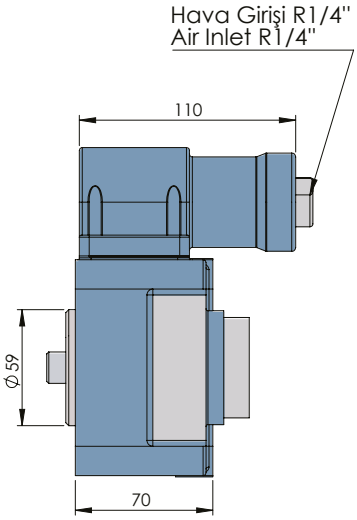


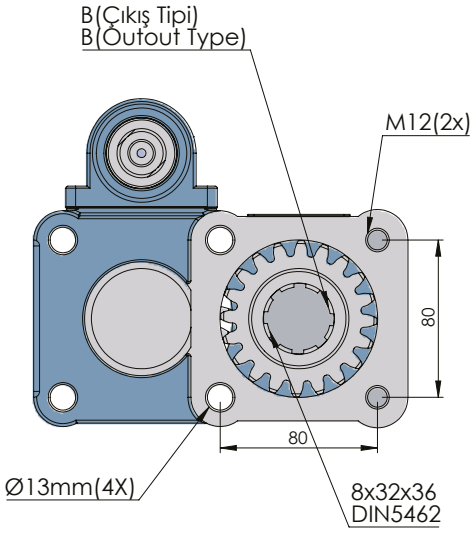


| CODE<br>KOD | TYPE<br>TİP (A) | MOUNTING TYPE<br>BAĞLANTI TİPİ (B) | MOUNTING SIDE<br>BAĞLANTI | TORQUE<br>TORK<br>(Kgm / Nm) | POWER<br>GÜÇ<br>(Hp / Kw) | SPEED<br>DEVİR<br>(RPM) | RATIO<br>ORAN |
|---|---|---|---|---|---|---|---|
| 50414311P0 | PNEUMATIC<br>PNÖMATİK | UNI ADAPTER<br>ADAPTÖRLÜ UNI | REAR<br>KUYRUK | 26,5 Kgm<br>260 Nm | 24,5 HP<br>18,3 Kw | 675 RPM | 1/1,2 |
| 50414321P0 | | ISO | | | | | |
| 50414331P0 | | FLANGE<br>ADAPTÖRLÜ FLANŞLI | | | | | |
| 50414341P0 | | SHAFT<br>ADAPTÖRLÜ ŞAFTLI | | | | | |

| GEARBOX / ANA ŞANZIMANLAR | USED VEHICLES / KULLANILAN BAZI ARAÇLAR |
|---|---|
| EATON FS/FSV/FSO/H/V 6109(6,59-8,81-12,64)-6209-8209(8,76-12,57) FS/FSV/FSO/H/V 5109-6309-8309 (7,84-6,59-8,76-9,45-12,637) A EATON ES 11109 DD (8,81) - ES 11109 LH ESO 14409 EATON ESO 14409 FORD 2018 | 214.26-220.26-280 FATİH / 2520L-2621 FORD CARGO / 522-822-620 BMC 280 / FODEN 3000 26.234-26.264-26.284 MAN 6X2 EURO / SEDDON 211 / NISSAN CPC 16 / RENAULT MIDLUM<br>270 TATA LPTA 1621 TC 6x6-LPS 4021 TC / ERF ES6 / 1626 JAC MISIR / AMW INDIA 4930- 4018-2518 ISUZU FXZ 23 / HINO FM1JNRA-JNPD-JKPA-GVW 26T / MITSUB-ISHI M527M2L / 527M3L / FN 627 NISSAN UD177ETN-CWA211MHRR-CWA214-CPC16 / HINO 500 SERIES GH1JLPD EURO 2 / 18.264 MAN M |

Seçeceğiniz pompanın dönüş yönü, P.T.O. dönüş yönü ile ters olmalıdır.
The rotation of the choosen pump has to be opposite with the rotation of P.T.O.

P.T.O. montaj edildikten sonra ana şanzıman yağını tamamlayın.
Fill the oil of the gear box after mounting the P.T.O.

# EATON 6109 SIDE UNI

## EATON 6109 YAN UNI



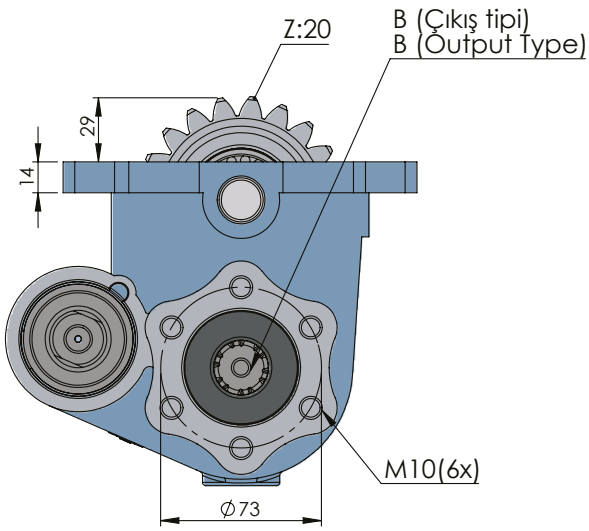


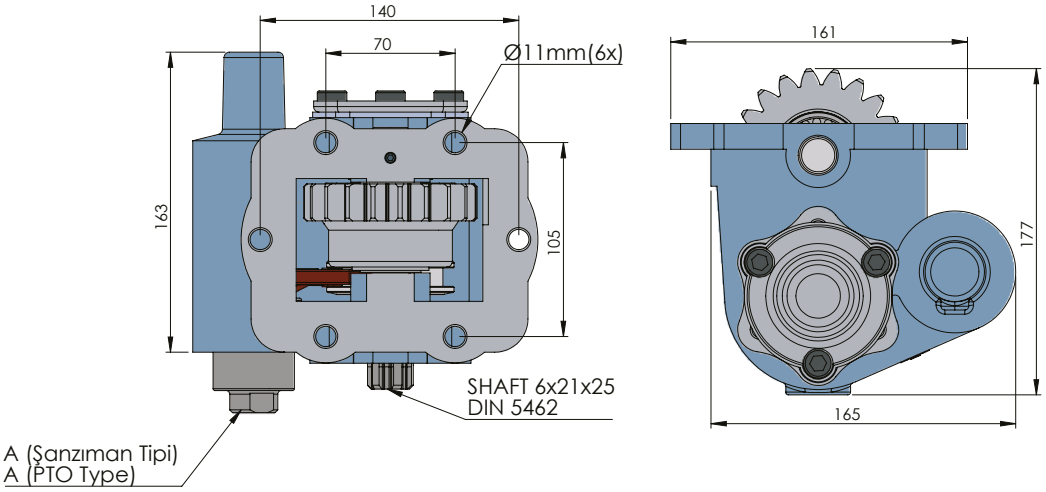


| CODE<br>KOD | TYPE<br>TİP (A) | MOUNTING TYPE<br>BAĞLANTI TİPİ (B) | MOUNTING SIDE<br>BAĞLANTI | TORQUE<br>TORK<br>(Kgm / Nm) | POWER<br>GÜÇ<br>(Hp / Kw) | SPEED<br>DEVİR<br>(RPM) | RATIO<br>ORAN |
|---|---|---|---|---|---|---|---|
| 50414511P0 | PNEUMATIC<br>PNÖMATİK | UNI | LEFT SIDE<br>SOL YAN | 21 Kgm<br>206 Nm | 10,7 HP<br>8,1 Kw | 375 RPM | 1/1,25 |
| 50414521P0 | | ISO ADAPTER<br>ADAPTÖRLÜ ISO | | | | | |
| 50414531P0 | | FLANGE<br>FLANŞLI | | | | | |
| 50414541P0 | | SHAFT<br>ŞAFTLI | | | | | |

| GEARBOX / ANA ŞANZIMANLAR | USED VEHICLES / KULLANILAN BAZI ARAÇLAR |
|---|---|
| EATON FS/FSV/FSO/H/V 6109(6,59-8,81-12,64)-6209-8209(8,76-12,57) FS/FSV/FSO/H/V 5109- 6309-8309 (7,84-6,59-8,76-9,45-12,637) A EATON ES 11109 DD (8,81) - ES 11109 LH ESO 14409 EATON ESO 14409 FORD 2018 | 214.26-220.26-280 FATİH / 2520L-2621 FORD CARGO / 522-822-620 BMC 280 / FODEN 3000 26.234-26.264-26.284 MAN 6X2 EURO / SEDDON 211 / NISSAN CPC 16 / RENAULT MIDLUM 270 TATA LPTA 1621 TC 6x6-LPS 4021 TC / ERF ES6 / 1626 JAC MISIR / AMW INDIA 4930- 4018-2518 ISUZU FXZ 23 / HINO FM1JNRA-JNPD-JKPA-GVW 26T / MITSUBISHI M527M2L / 527M3L / FN 627 NISSAN UD177ETN-CWA211MHRR-CWA214-CPC16 / HINO 500 SERIES GH1JLPD EURO 2 / 18.264 MAN M |



Seçeceğiniz pompanın dönüş yönü, P.T.O. dönüş yönü ile ters olmalıdır.
The rotation of the choosen pump has to be opposite to the rotation of P.T.O.

P.T.O. montaj edildikten sonra ana şanzıman yağını tamamlayın.
Fill the oil of the gear box after mounting the P.T.O.

# ISUZU MSB 5S

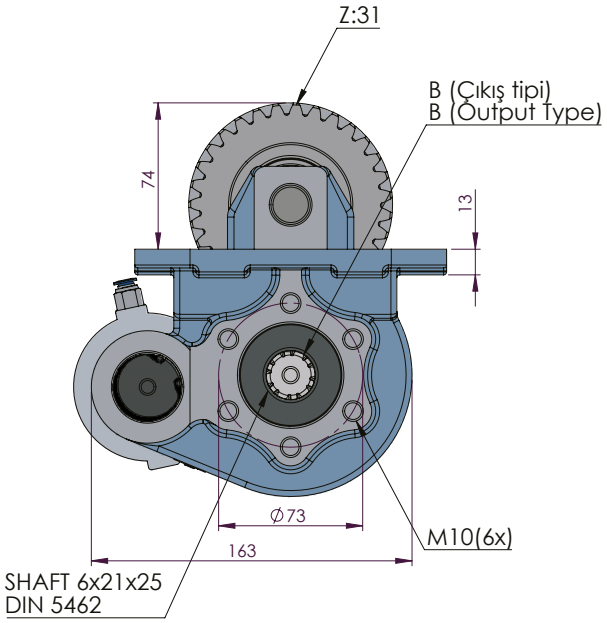




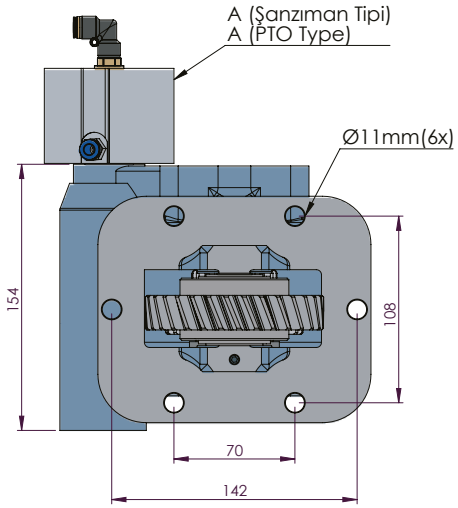


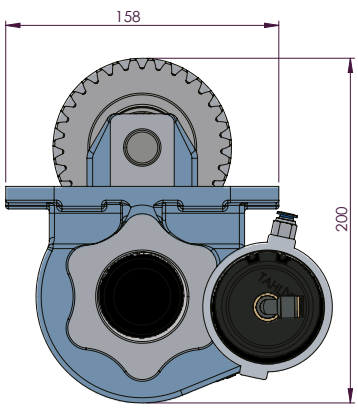


| CODE<br>KOD | TYPE<br>TİP (A) | MOUNTING TYPE<br>BAĞLANTI TİPİ (B) | MOUNTING SIDE<br>BAĞLANTI | TORQUE<br>TORK<br>(Kgm / Nm) | POWER<br>GÜÇ<br>(Hp / Kw) | SPEED<br>DEVİR<br>(RPM) | RATIO<br>ORAN |
|---|---|---|---|---|---|---|---|
| 50610512M0 | MECHANIC<br>MEKANİK | UNI | SIDE<br>YAN | 16,6 Kgm<br>162,8 Nm | 14,2 Hp<br>10,6 Kw | 600 RPM | 1:1,34 |
| 50610522M0 | | ISO ADAPTER / ADAPTÖRLÜ ISO | | | | | |
| 50610532M0 | | FLANGE / FLANŞLI | | | | | |
| 50610542M0 | | SHAFT / ŞAFTLI | | | | | |
| 50610512V0 | VACUUM<br>VAKUMLU | UNI | | | | | |
| 50610522V0 | | ISO ADAPTER / ADAPTÖRLÜ ISO | | | | | |
| 50610532V0 | | FLANGE / FLANŞLI | | | | | |
| 50610542V0 | | SHAFT / ŞAFTLI | | | | | |
| 50610512P0 | PNEUMATIC<br>PNÖMATİK | UNI | | | | | |
| 50610522P0 | | ISO ADAPTER / ADAPTÖRLÜ ISO | | | | | |
| 50610532P0 | | FLANGE / FLANŞLI | | | | | |
| 50610542P0 | | SHAFT / ŞAFTLI | | | | | |

| GEARBOX / ANA ŞANZIMANLAR | USED VEHICLES / KULLANILAN BAZI ARAÇLAR |
|---|---|
| MSB - 5S / MSB - 5M / MSB - 5G / M0A 89 / MSB - 5R / MSB - 5N / MSB - 5P / JC521T5H / LC5T88 ( 5,016-5,037-5,016-5,594) (600 RPM, SAĞ) | NKR 2.8 PTO ISUZU LOW / NKR 55 LOW / NHR 55E / CARRIER 250T /ISUZU FSR/LM 524 / NKR55E2 / NKR55L / BJ1049 |

Seçeceğiniz pompanın dönüş yönü, P.T.O. dönüş yönü ile ters olmalıdır.
The rotation of the choosen pump has to be opposite with the rotation of P.T.O.

P.T.O. montaj edildikten sonra ana şanzıman yağını tamamlayın.
Fill the oil of the gear box after mounting the P.T.O.

# ISUZU MSA 5P



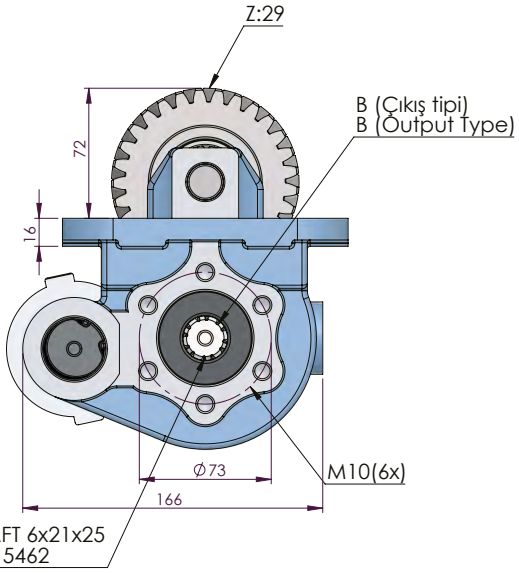


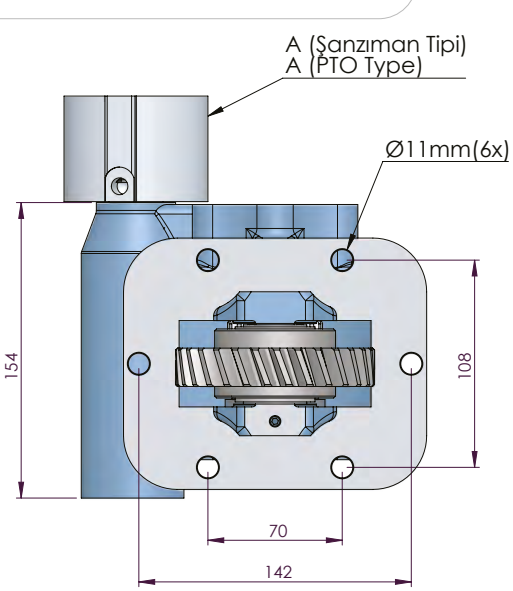


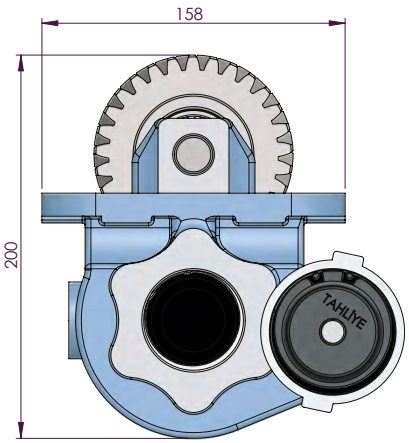


| CODE<br>KOD | TYPE<br>TİP (A) | MOUNTING TYPE<br>BAĞLANTI TİPİ (B) | MOUNTING SIDE<br>BAĞLANTI | TORQUE<br>TORK<br>(Kgm / Nm) | POWER<br>GÜÇ<br>(Hp / Kw) | SPEED<br>DEVİR<br>(RPM) | RATIO<br>ORAN |
|---|---|---|---|---|---|---|---|
| 50611512M0 | MECHANIC<br>MEKANİK | UNI | SIDE<br>YAN | 18,2 Kgm<br>178,5 Nm | 15 Hp<br>11,2 Kw | 600 RPM | 1:1,31 |
| 50611522M0 | | ISO ADAPTER<br>ADAPTÖRLÜ ISO | | | | | |
| 50611532M0 | | FLANGE<br>FLANŞLI | | | | | |
| 50611542M0 | | SHAFT<br>ŞAFTLI | | | | | |
| 50611512V0 | VACUUM<br>VAKUMLU | UNI | | | | | |
| 50611522V0 | | ISO ADAPTER<br>ADAPTÖRLÜ ISO | | | | | |
| 50611532V0 | | FLANGE<br>FLANŞLI | | | | | |
| 50611542V0 | | SHAFT<br>ŞAFTLI | | | | | |

| GEARBOX / ANA ŞANZIMANLAR | USED VEHICLES / KULLANILAN BAZI ARAÇLAR |
|---|---|
| MSA - 5P / MSA - 5G / SMA - SP / MSA - SP / MSA - 5D( 5,744-5,788 ) / LC5T30 ( 4,766 ) / LC5T97 (5,788) (600 RPM, SAĞ) | KS 11-KS 20-KS 21-KS 32-8.8 WIDE DIESEL-NKR 55L / 3.3IRAN PTO ISUZU NKR-NHR-NPR 3.6 / 3.9 PTO ISUZU HVC SAH 1063 (LC 5 T 30) |



Seçeceğiniz pompanın dönüş yönü, P.T.O. dönüş yönü ile ters olmalıdır.
The rotation of the choosen pump has to be opposite to the rotation of P.T.O.

P.T.O. montaj edildikten sonra ana şanzıman yağını tamamlayın.
Fill the oil of the gear box after mounting the P.T.O.

# ISUZU MXA 5R

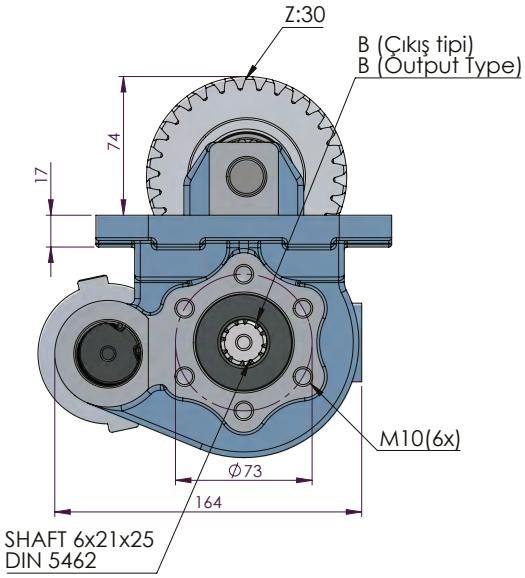




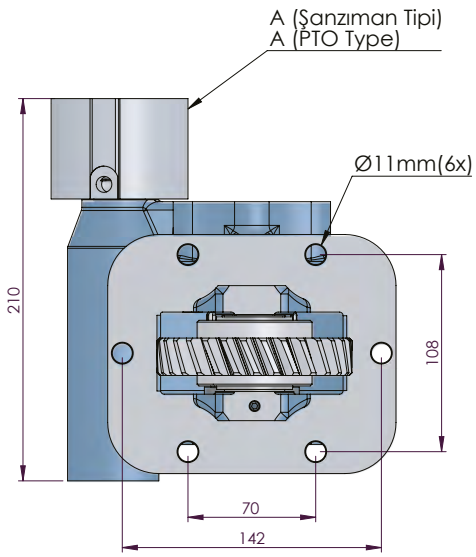


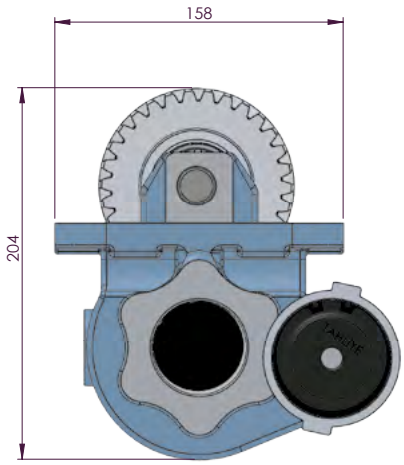


| CODE<br>KOD | TYPE<br>TİP (A) | MOUNTING TYPE<br>BAĞLANTI TİPİ (B) | MOUNTING SIDE<br>BAĞLANTI | TORQUE<br>TORK<br>(Kgm / Nm) | POWER<br>GÜÇ<br>(Hp / Kw) | SPEED<br>DEVİR<br>(RPM) | RATIO<br>ORAN |
|---|---|---|---|---|---|---|---|
| 50612512M0 | MECHANIC<br>MEKANİK | UNI | SIDE<br>YAN | 18,2 Kgm<br>178,5 Nm | 15 Hp<br>11,2 Kw | 600 RPM | 1:1,31 |
| 50612522M0 | | ISO ADAPTER<br>ADAPTÖRLÜ ISO | | | | | |
| 50612532M0 | | FLANGE<br>FLANŞLI | | | | | |
| 50612542M0 | | SHAFT<br>ŞAFTLI | | | | | |
| 50612512V0 | VACUUM<br>VAKUMLU | UNI | | | | | |
| 50612522V0 | | ISO ADAPTER<br>ADAPTÖRLÜ ISO | | | | | |
| 50612532V0 | | FLANGE<br>FLANŞLI | | | | | |
| 50612542V0 | | SHAFT<br>ŞAFTLI | | | | | |

| GEARBOX / ANA ŞANZIMANLAR | USED VEHICLES / KULLANILAN BAZI ARAÇLAR |
|---|---|
| MXA-5R / MXA-5S / MSA-5D / MSA-5S MXA-6R / MXA 5C MXA-5D /MSA-5G(600 RPM, SAĞ) | NKR WIDE LX 100 HP-4.3 NPR CHAMPION PTO ISUZU / 3.2 NPR PTO ISUZU NPR 66 / NHR 70 NKR 66 / NKR 66E / NPR 66P / NPR 300-400-400S FRR500 / PTO ISUZU ELF 250 |

Seçeceğiniz pompanın dönüş yönü, P.T.O. dönüş yönü ile ters olmalıdır.
The rotation of the choosen pump has to be opposite with the rotation of P.T.O.

P.T.O. montaj edildikten sonra ana şanzıman yağını tamamlayın.
Fill the oil of the gear box after mounting the P.T.O.

# ISUZU MOY CR



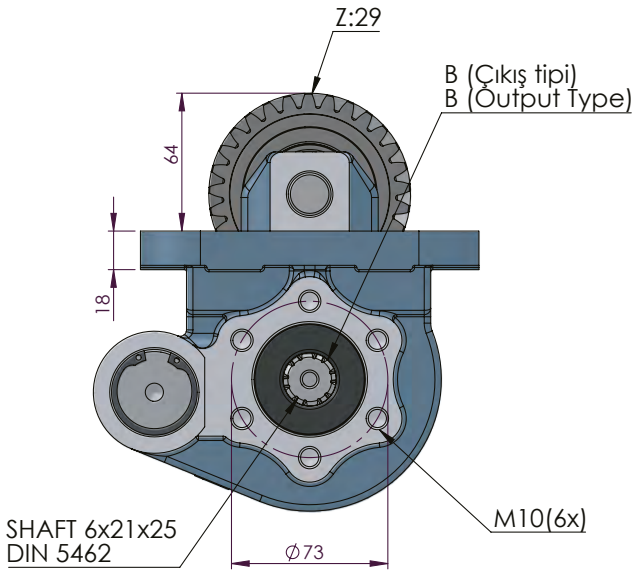


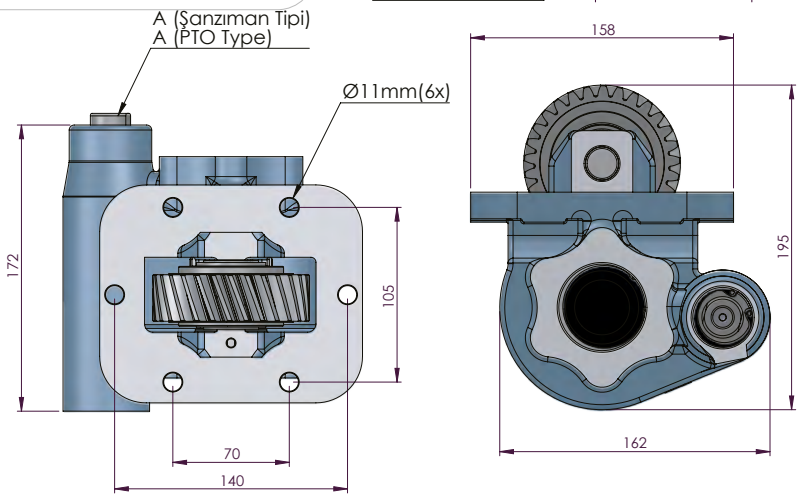


| CODE<br>KOD | TYPE<br>TİP (A) | MOUNTING TYPE<br>BAĞLANTI TİPİ (B) | MOUNTING SIDE<br>BAĞLANTI | TORQUE<br>TORK<br>(Kgm / Nm) | POWER<br>GÜÇ<br>(Hp / Kw) | SPEED<br>DEVİR<br>(RPM) | RATIO<br>ORAN |
|---|---|---|---|---|---|---|---|
| 50617512M0 | MECHANIC<br>MEKANİK | UNI | SIDE<br>YAN | 23 Kgm<br>225 Nm | 29,4 Hp<br>22 Kw | 1000 RPM | 1:1,03 |
| 50617522M0 | | ISO ADAPTER / ADAPTÖRLÜ ISO | | | | | |
| 50617532M0 | | FLANGE / FLANŞLI | | | | | |
| 50617542M0 | | SHAFT / ŞAFTLI | | | | | |
| 50617512V0 | VACUUM<br>VAKUMLU | UNI | | | | | |
| 50617522V0 | | ISO ADAPTER / ADAPTÖRLÜ ISO | | | | | |
| 50617532V0 | | FLANGE / FLANŞLI | | | | | |
| 50617542V0 | | SHAFT / ŞAFTLI | | | | | |
| 50617512P0 | PNEUMATIC<br>PNÖMATİK | UNI | | | | | |
| 50617522P0 | | ISO ADAPTER / ADAPTÖRLÜ ISO | | | | | |
| 50617532P0 | | FLANGE / FLANŞLI | | | | | |
| 50617542P0 | | SHAFT / ŞAFTLI | | | | | |

| GEARBOX / ANA ŞANZIMANLAR | USED VEHICLES / KULLANILAN BAZI ARAÇLAR |
|---|---|
| MYY5T / MOY-9F / MOY-9H / MOYCR / MYY-6S / MOYMB / MOYNA / MYY-5S / MYY-6P / MYY-5A<br>/ MOYGX / MOY4N / MOYNB / MOYNC / MYY5R / MYY5D / MOYPN / MOYUK / MOYMC / MOYMR / MOYPZ ( 5,315-5,979 ) | NLR85L (ED6AYG-HD6AYG) / NNR85L (FD5AYG-HD5AYG) / NPR75L (HL5VAYGN-KL5VAYGNKL5VAYG)<br>NPR 66-71-75-77 ISUZU / NKR 250 / NPR 250 / NKR 66 E2L / HINO 300 SERI 4X2 / NQR 70 P / ELF NKR71HDELF 130 / NPR 66L-PL / NQR71PL / NPR85L / 4.3 NPR 70 / NKR66E /<br>NPR66P / NQR71R / NPR 66 LL / HINO DUTRO NQR71PL / NPR 75 LONG / NLR / NLR LONG /<br>NNR / NNR LONG / NPR 75 / N 10 / NPR 8 / NPR 8 LONG |



Seçeceğiniz pompanın dönüş yönü, P.T.O. dönüş yönü ile ters olmalıdır.
The rotation of the choosen pump has to be opposite to the rotation of P.T.O.

P.T.O. montaj edildikten sonra ana şanzıman yağını tamamlayın.
Fill the oil of the gear box after mounting the P.T.O.

# ISUZU MBP 6P

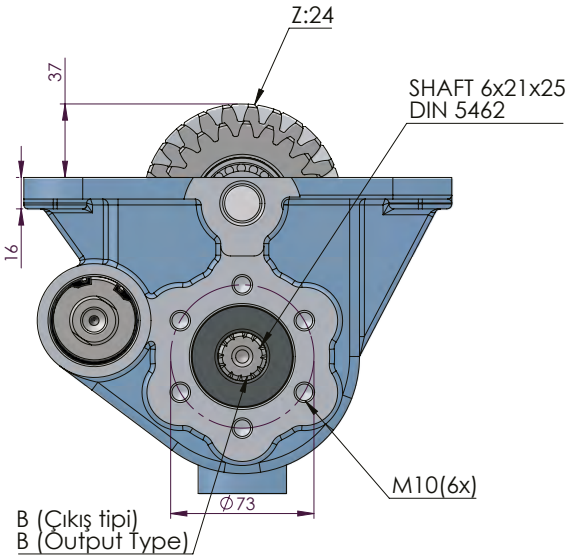




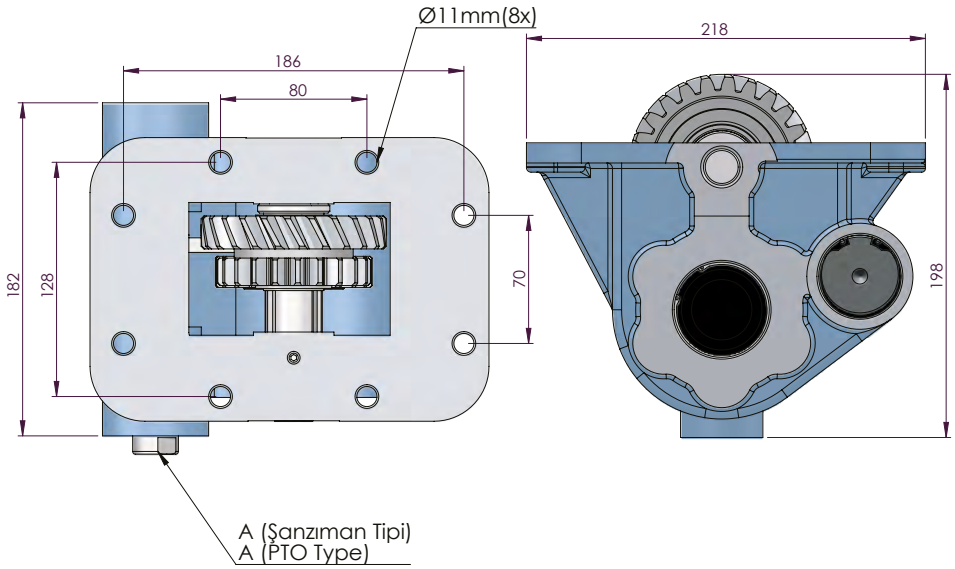


| CODE<br>KOD | TYPE<br>TİP (A) | MOUNTING TYPE<br>BAĞLANTI TİPİ (B) | MOUNTING SIDE<br>BAĞLANTI | TORQUE<br>TORK<br>(Kgm / Nm) | POWER<br>GÜÇ<br>(Hp / Kw) | SPEED<br>DEVİR<br>(RPM) | RATIO<br>ORAN |
|---|---|---|---|---|---|---|---|
| 50613512M0 | MECHANIC<br>MEKANİK | UNI | SIDE<br>YAN | 18 Kgm<br>176,6 Nm | 14,2 Hp<br>10,6 Kw | 550 RPM | 1:0,95 |
| 50613522M0 | | ISO ADAPTER<br>ADAPTÖRLÜ ISO | | | | | |
| 50613532M0 | | FLANGE<br>FLANŞLI | | | | | |
| 50613542M0 | | SHAFT<br>ŞAFTLI | | | | | |
| 50613512P0 | PNEUMATIC<br>PNÖMATİK | UNI | | | | | |
| 50613522P0 | | ISO ADAPTER<br>ADAPTÖRLÜ ISO | | | | | |
| 50613532P0 | | FLANGE<br>FLANŞLI | | | | | |
| 50613542P0 | | SHAFT<br>ŞAFTLI | | | | | |

| GEARBOX / ANA ŞANZIMANLAR | USED VEHICLES / KULLANILAN BAZI ARAÇLAR |
|---|---|
| MBP - 6P / MBF - 5C / MBG - 6P-6Q / MBG- 5A / MBG-5H / MBD-5A,5B,5C,6P / MBJ-5J,6T / MBP-6A, 6R / MBG-5B,5C,5F,5R,6Q,6P,6R(550 RPM, SAĞ) | NQR 4.8 TURBO ISUZU / NQR 70 P / FSR / LM524 / FSR 33L / FRR 33H / FTS 33H<br>7 FSS 33 /<br>EXZ52 / FRR 33L |

Seçeceğiniz pompanın dönüş yönü, P.T.O. dönüş yönü ile ters olmalıdır.
The rotation of the choosen pump has to be opposite with the rotation of P.T.O.

P.T.O. montaj edildikten sonra ana şanzıman yağını tamamlayın.
Fill the oil of the gear box after mounting the P.T.O.

# ISUZU MOZ 06



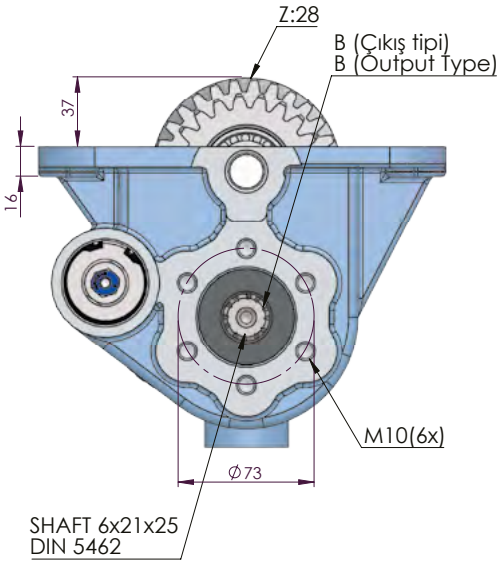


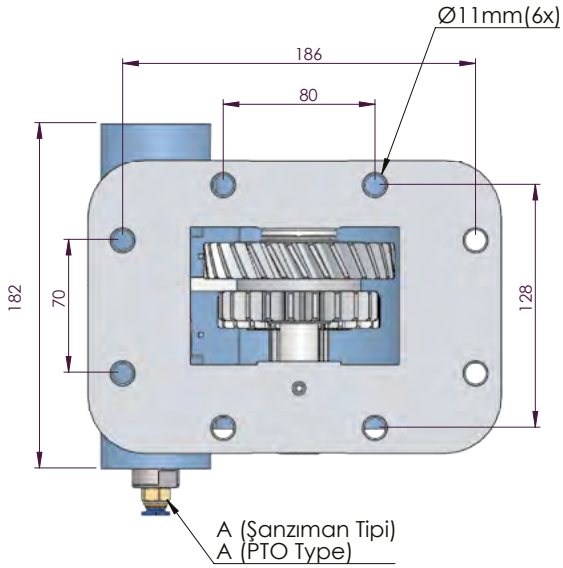


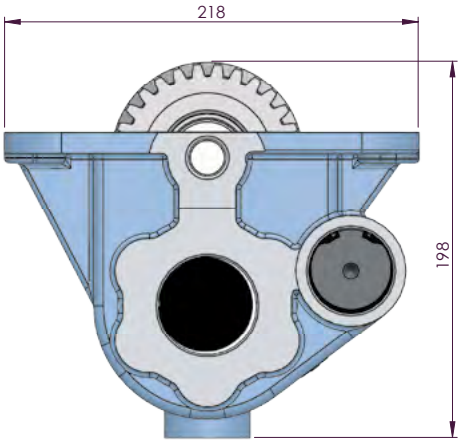


| CODE<br>KOD | TYPE<br>TİP (A) | MOUNTING TYPE<br>BAĞLANTI TİPİ (B) | MOUNTING SIDE<br>BAĞLANTI | TORQUE<br>TORK<br>(Kgm / Nm) | POWER<br>GÜÇ<br>(Hp / Kw) | SPEED<br>DEVİR<br>(RPM) | RATIO<br>ORAN |
|---|---|---|---|---|---|---|---|
| 50614512M0 | MECHANIC<br>MEKANİK | UNI | SIDE<br>YAN | 21,6 Kgm<br>212 Nm | 27,6 Hp<br>20,6 Kw | 700 RPM | 1:0,95 |
| 50614522M0 | | ISO ADAPTER<br>ADAPTÖRLÜ ISO | | | | | |
| 50614532M0 | | FLANGE<br>FLANŞLI | | | | | |
| 50614542M0 | | SHAFT<br>ŞAFTLI | | | | | |
| 50614512P0 | PNEUMATIC<br>PNÖMATİK | UNI | | | | | |
| 50614522P0 | | ISO ADAPTER<br>ADAPTÖRLÜ ISO | | | | | |
| 50614532P0 | | FLANGE<br>FLANŞLI | | | | | |
| 50614542P0 | | SHAFT<br>ŞAFTLI | | | | | |

| GEARBOX / ANA ŞANZIMANLAR | USED VEHICLES / KULLANILAN BAZI ARAÇLAR |
|---|---|
| MOZ - 06 / MZZ - 6U / MOZ 53 / MZZ - 6W / MZZ - 5D / MZZ - 6C | NQR 4.8 3D TURBO PTO ISUZU (2005)/NQR 71PL 5.2/NQR 75L |

Seçeceğiniz pompanın dönüş yönü, P.T.O. dönüş yönü ile ters olmalıdır.
The rotation of the choosen pump has to be opposite to the rotation of P.T.O.

P.T.O. montaj edildikten sonra ana şanzıman yağını tamamlayın.
Fill the oil of the gear box after mounting the P.T.O.

# ISUZU MOZ 79

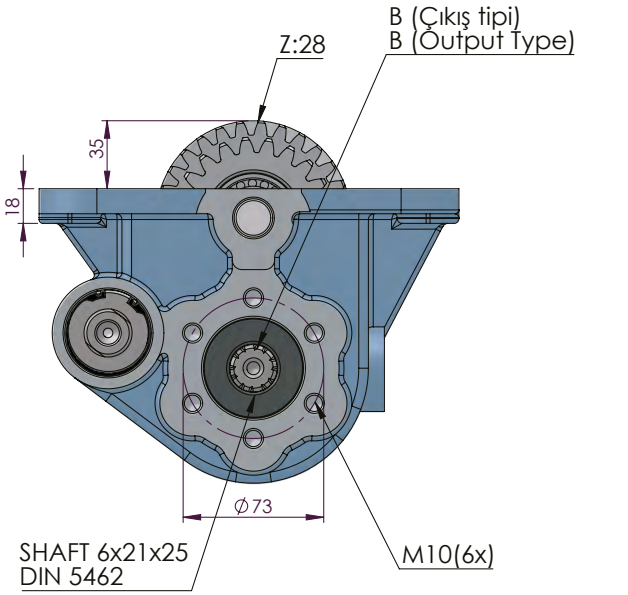




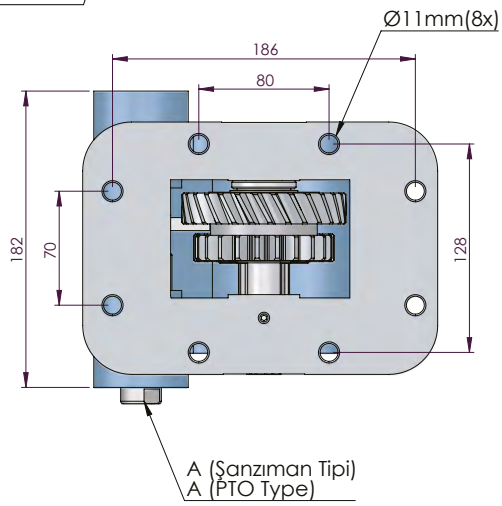


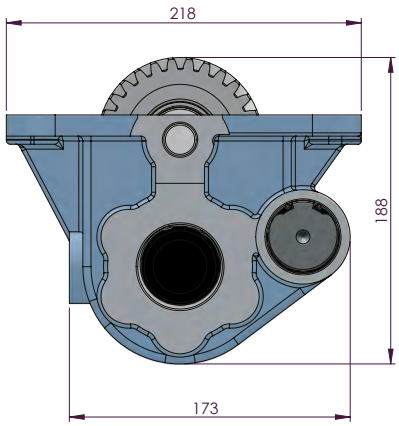


| CODE<br>KOD | TYPE<br>TİP (A) | MOUNTING TYPE<br>BAĞLANTI TİPİ (B) | MOUNTING SIDE<br>BAĞLANTI | TORQUE<br>TORK<br>(Kgm / Nm) | POWER<br>GÜÇ<br>(Hp / Kw) | SPEED<br>DEVİR<br>(RPM) | RATIO<br>ORAN |
|---|---|---|---|---|---|---|---|
| 50615512M0 | MECHANIC<br>MEKANİK | UNI | SIDE<br>YAN | 41 Kgm<br>402 Nm | 56 Hp<br>42 Kw | 2000 | 1:0,9 |
| 50615522M0 | | ISO ADAPTER<br>ADAPTÖRLÜ ISO | | | | | |
| 50615532M0 | | FLANGE<br>FLANŞLI | | | | | |
| 50615542M0 | | SHAFT<br>ŞAFTLI | | | | | |
| 50615512P0 | PNEUMATIC<br>PNÖMATİK | UNI | | | | | |
| 50615522P0 | | ISO ADAPTER<br>ADAPTÖRLÜ ISO | | | | | |
| 50615532P0 | | FLANGE<br>FLANŞLI | | | | | |
| 50615542P0 | | SHAFT<br>ŞAFTLI | | | | | |

| GEARBOX / ANA ŞANZIMANLAR | USED VEHICLES / KULLANILAN BAZI ARAÇLAR |
|---|---|
| MOZ92-MOZ89-MOZ53MOZ-79 /MOZ-95 /M1Z-08 /M1Z-11 /MZZ-6U /MZZ-6W /MZZ-5D / MZZ-6C,6U,6W /MZZ-6P /MZZ-6F /MZZ-6R / MZZ-6S (4,777) / MZZ - 5D (6,369) /MZZ-6N (6,369) | NPR LONG 3D ISUZU / NPR75L (KL5VAYG) / ISUZU FRR 90 / NPR 3D |

Seçeceğiniz pompanın dönüş yönü, P.T.O. dönüş yönü ile ters olmalıdır.
The rotation of the choosen pump has to be opposite with the rotation of P.T.O.

P.T.O. montaj edildikten sonra ana şanzıman yağını tamamlayın.
Fill the oil of the gear box after mounting the P.T.O.

# ISUZU MLD 6A



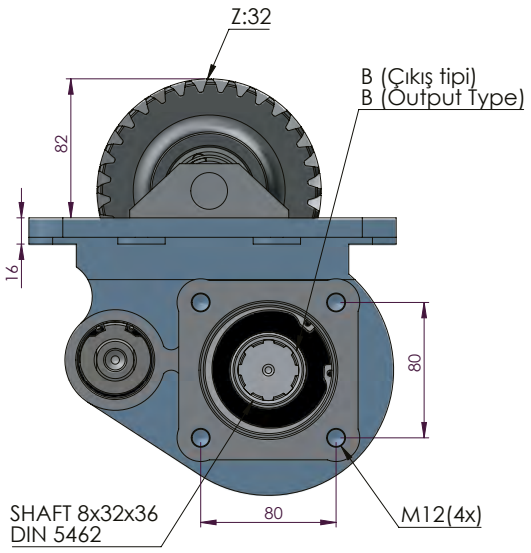


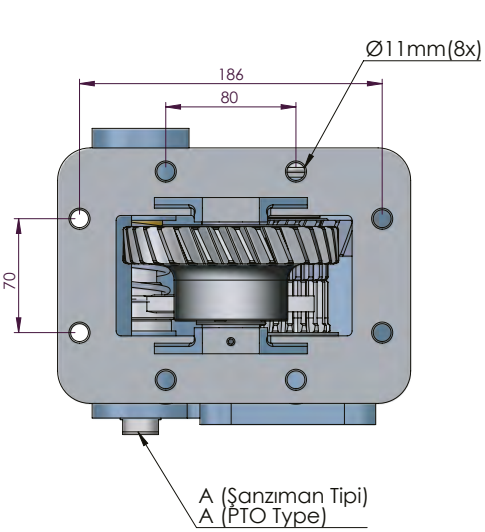


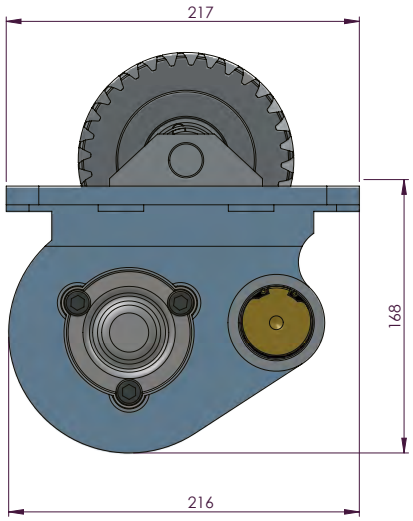


| CODE<br>KOD | TYPE<br>TİP (A) | MOUNTING TYPE<br>BAĞLANTI TİPİ (B) | MOUNTING SIDE<br>BAĞLANTI | TORQUE<br>TORK<br>(Kgm / Nm) | POWER<br>GÜÇ<br>(Hp / Kw) | SPEED<br>DEVİR<br>(RPM) | RATIO<br>ORAN |
|---|---|---|---|---|---|---|---|
| 50619511P0 | PNEUMATIC<br>PNÖMATİK | UNI ADAPTER<br>ADAPTÖRLÜ UNI | SIDE<br>YAN | 45 Kgm<br>441 Nm | 61 Hp<br>46 Kw | 2000 RPM | 1:1,28 |
| 50619521P0 | | ISO | | | | | |
| 50619531P0 | | FLANGE<br>ADAPTÖRLÜ FLANŞLI | | | | | |
| 50619541P0 | | SHAFT<br>ADAPTÖRLÜ ŞAFTLI | | | | | |

| GEARBOX / ANA ŞANZIMANLAR | USED VEHICLES / KULLANILAN BAZI ARAÇLAR |
|---|---|
| MLD-6A / MLD-6B,6C,6D,6E,6F,6G,6R,6S,6W,7R,7Q, (8.761-6.720) / MRB-6P / LC6T70 (8.761-6.120) | 4.8 FTR ISUZU / FTR 33P/ FTR33K / FNR / FVR5FF / FSR33L / FVR33P / LT132 / CHEVROLET<br>FVR 32 ML F110.210 EURO 4 / ISUZU FRR210 / FRR90HLH / LLH FTR240 / FTR34JLH QLH<br>FVM230/200 / FVM33N2E / JAC FTR33H / FVR33G F10.210 - F11.210 - F12.240 - F9.210 |



Seçeceğiniz pompanın dönüş yönü, P.T.O. dönüş yönü ile ters olmalıdır.
The rotation of the choosen pump has to be opposite to the rotation of P.T.O.

P.T.O. montaj edildikten sonra ana şanzıman yağını tamamlayın.
Fill the oil of the gear box after mounting the P.T.O.

# ISUZU MLD 6Q

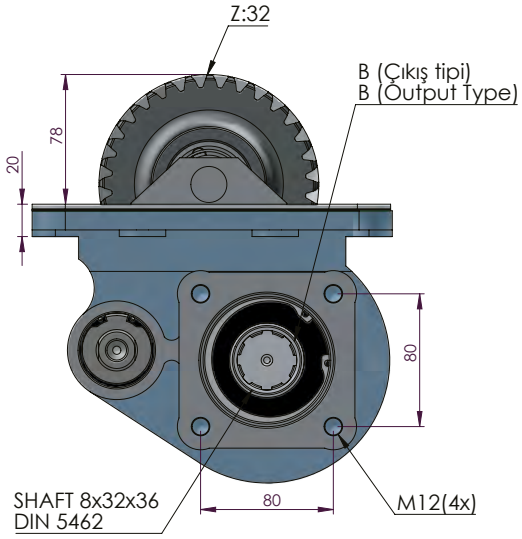




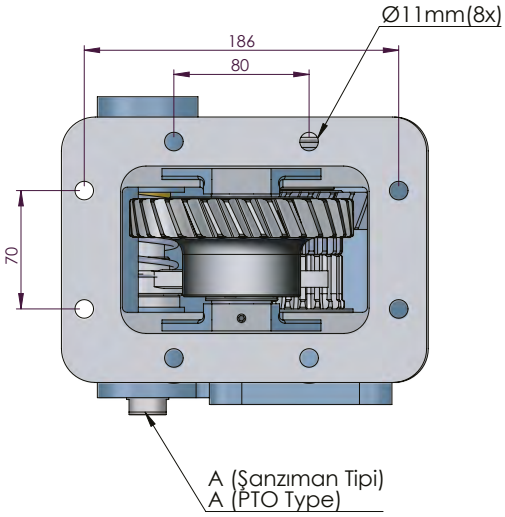


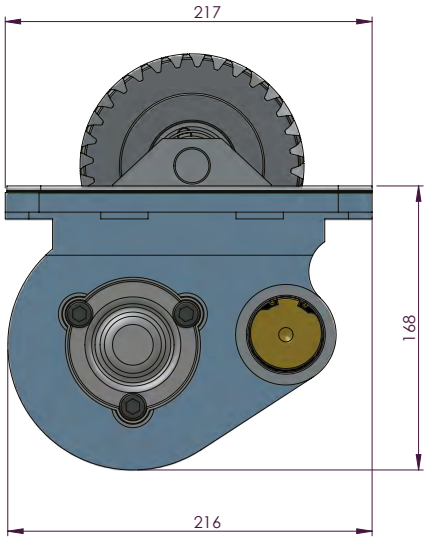


| CODE<br>KOD | TYPE<br>TİP (A) | MOUNTING TYPE<br>BAĞLANTI TİPİ (B) | MOUNTING SIDE<br>BAĞLANTI | TORQUE<br>TORK<br>(Kgm / Nm) | POWER<br>GÜÇ<br>(Hp / Kw) | SPEED<br>DEVİR<br>(RPM) | RATIO<br>ORAN |
|---|---|---|---|---|---|---|---|
| 50620511P0 | PNEUMATIC<br>PNÖMATİK | UNI ADAPTER<br>ADAPTÖRLÜ UNI | SIDE<br>YAN | 45 Kgm<br>441 Nm | 61 Hp<br>46 Kw | 2000 RPM | 1:1,28 |
| 50620521P0 | | ISO | | | | | |
| 50620531P0 | | FLANGE<br>ADAPTÖRLÜ FLANŞLI | | | | | |
| 50620541P0 | | SHAFT<br>ADAPTÖRLÜ ŞAFTLI | | | | | |

| GEARBOX / ANA ŞANZIMANLAR | USED VEHICLES / KULLANILAN BAZI ARAÇLAR |
|---|---|
| ISUZU MLD-6Q (8.761-6.720) | F12.240 - F9.210 |



Seçeceğiniz pompanın dönüş yönü, P.T.O. dönüş yönü ile ters olmalıdır.
The rotation of the choosen pump has to be opposite with the rotation of P.T.O.

P.T.O. montaj edildikten sonra ana şanzıman yağını tamamlayın.
Fill the oil of the gear box after mounting the P.T.O.

# ISUZU MZW 6P



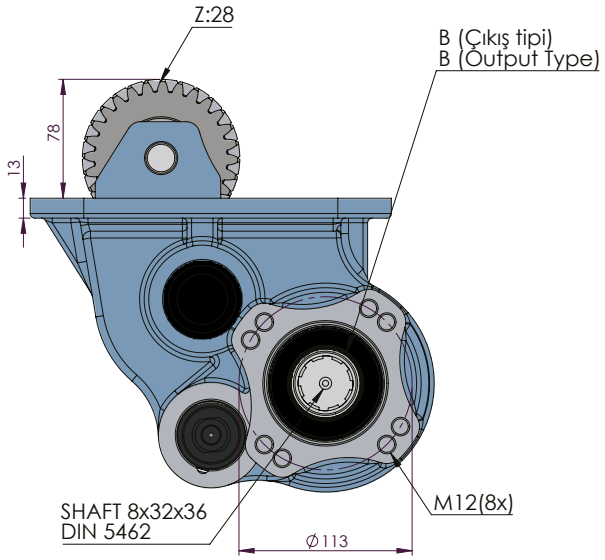


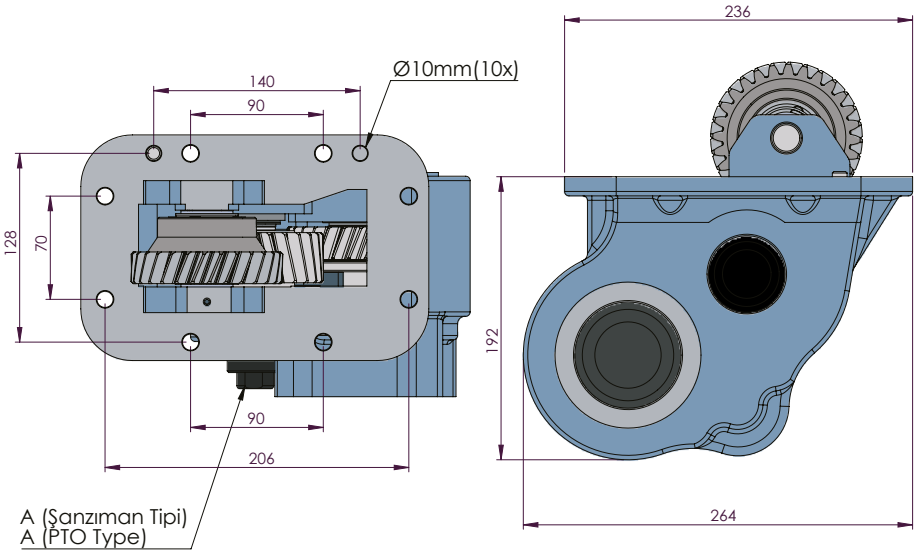


| CODE<br>KOD | TYPE<br>TİP (A) | MOUNTING TYPE<br>BAĞLANTI TİPİ (B) | MOUNTING SIDE<br>BAĞLANTI | TORQUE<br>TORK<br>(Kgm / Nm) | POWER<br>GÜÇ<br>(Hp / Kw) | SPEED<br>DEVİR<br>(RPM) | RATIO<br>ORAN |
|---|---|---|---|---|---|---|---|
| 50621512P0 | PNEUMATIC<br>PNÖMATİK | UNI ADAPTER<br>ADAPTÖRLÜ UNI | SIDE<br>YAN | 44 Kgm<br>431 Nm | 60 Hp<br>45 Kw | 2000 RPM | 1:0,95 |
| 50621522P0 | | ISO | | | | | |
| 50621532P0 | | FLANGE<br>ADAPTÖRLÜ FLANŞLI | | | | | |
| 50621542P0 | | SHAFT<br>ADAPTÖRLÜ ŞAFTLI | | | | | |

| GEARBOX / ANA ŞANZIMANLAR | USED VEHICLES / KULLANILAN BAZI ARAÇLAR |
|---|---|
| PTO ISUZU MZW 6 P, PTO ISUZU MW 02 B, PTO ISUZU MW00M-T1938805, PTO ISUZU FTR 850 LWB | ISUZU FTR 850 LWB / FRR 210 / FVM-FRR34L-FRR 34N-FSR34N-FTR34P-FTR34Q-FRR 500-FRR<br>550-FSR 800-FSR 750-FTR 850 FTS 750 4X4 / ISUZU SMOOTHER FRR 500 AMT-FSR 800 AMTFSR<br>750 CRW AMT-FTR 850 AMT / FVR34UL / GIGA FTR ISUZU ISUZU TORA-ISUZU FORWARD FS |



Seçeceğiniz pompanın dönüş yönü, P.T.O. dönüş yönü ile ters olmalıdır.
The rotation of the choosen pump has to be opposite to the rotation of P.T.O.

P.T.O. montaj edildikten sonra ana şanzıman yağını tamamlayın.
Fill the oil of the gear box after mounting the P.T.O.

# ISUZU HINO M550

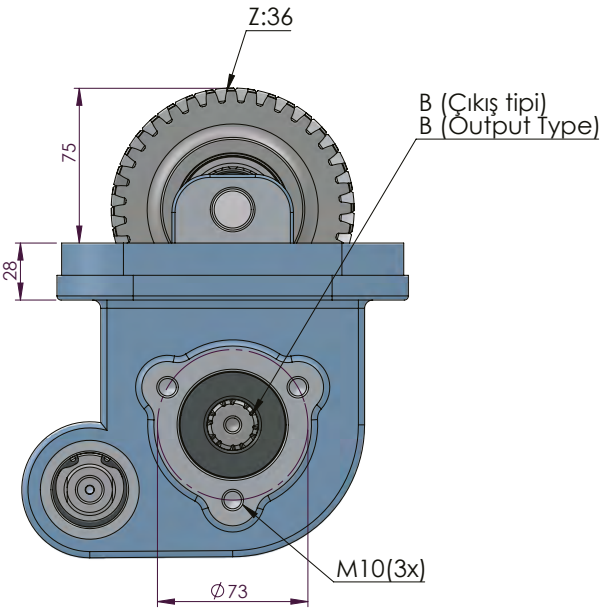




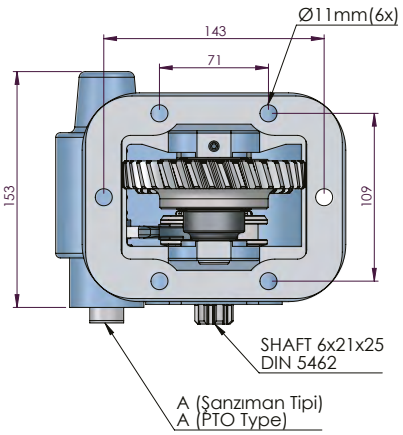


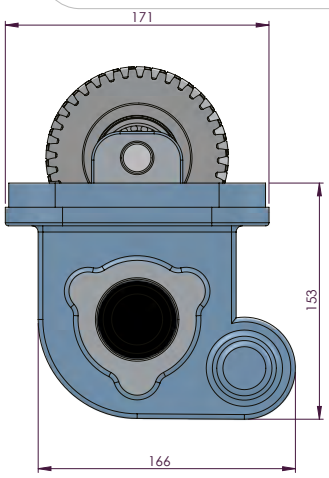


| CODE<br>KOD | TYPE<br>TİP (A) | MOUNTING TYPE<br>BAĞLANTI TİPİ (B) | MOUNTING SIDE<br>BAĞLANTI | TORQUE<br>TORK<br>(Kgm / Nm) | POWER<br>GÜÇ<br>(Hp / Kw) | SPEED<br>DEVİR<br>(RPM) | RATIO<br>ORAN |
|---|---|---|---|---|---|---|---|
| 50652512M0 | MECHANIC<br>MEKANİK | UNI | SIDE<br>YAN | 23,4 Kgm<br>230 Nm | 30 Hp<br>22 Kw | 750 RPM | 1:1,2 |
| 50652522M0 | | ISO ADAPTER / ADAPTÖRLÜ ISO | | | | | |
| 50652532M0 | | FLANGE / FLANŞLI | | | | | |
| 50652542M0 | | SHAFT / ŞAFTLI | | | | | |
| 50652512V0 | VACUUM<br>VAKUMLU | UNI | | | | | |
| 50652522V0 | | ISO ADAPTER / ADAPTÖRLÜ ISO | | | | | |
| 50652532V0 | | FLANGE / FLANŞLI | | | | | |
| 50652542V0 | | SHAFT / ŞAFTLI | | | | | |
| 50652512P0 | PNEUMATIC<br>PNÖMATİK | UNI | | | | | |
| 50652522P0 | | ISO ADAPTER / ADAPTÖRLÜ ISO | | | | | |
| 50652532P0 | | FLANGE / FLANŞLI | | | | | |
| 50652542P0 | | SHAFT / ŞAFTLI | | | | | |

| GEARBOX / ANA ŞANZIMANLAR | USED VEHICLES / KULLANILAN BAZI ARAÇLAR |
|---|---|
| M 550 (4,981 / 0.738) | HINO 614 / HINO 3615 / HINO 300 / HINO 3614 / XZU650L / HKMMKV3 / HINO DUTRO 130 /<br>XZU413R / XZU423RB3 / HINO XZU423RD3 / HINO 714 XZU710L6.5 / HINO 8T / WU730L /<br>WU710L / WU600L / HINO 300 714 |

Seçeceğiniz pompanın dönüş yönü, P.T.O. dönüş yönü ile ters olmalıdır.
The rotation of the choosen pump has to be opposite with the rotation of P.T.O.

P.T.O. montaj edildikten sonra ana şanzıman yağını tamamlayın.
Fill the oil of the gear box after mounting the P.T.O.

# ISUZU HINO M153



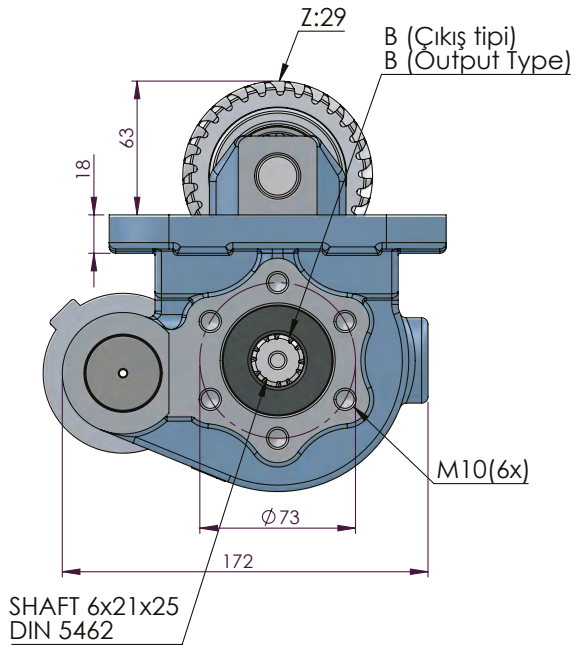


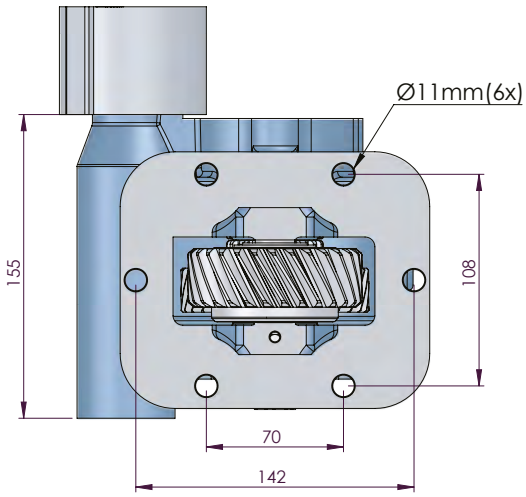


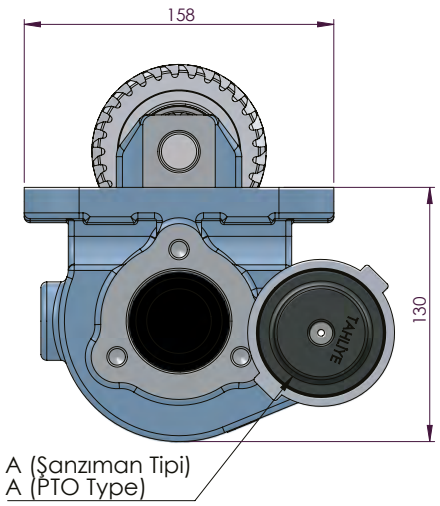


| CODE<br>KOD | TYPE<br>TİP (A) | MOUNTING TYPE<br>BAĞLANTI TİPİ (B) | MOUNTING SIDE<br>BAĞLANTI | TORQUE<br>TORK<br>(Kgm / Nm) | POWER<br>GÜÇ<br>(Hp / Kw) | SPEED<br>DEVİR<br>(RPM) | RATIO<br>ORAN |
|---|---|---|---|---|---|---|---|
| 50654512M0 | MECHANIC<br>MEKANİK | UNI | SIDE<br>YAN | 18,6 Kgm<br>182,4 Nm | 15,4 Hp<br>11,5 Kw | 600 RPN | 1:1,28 |
| 50654522M0 | | ISO ADAPTER / ADAPTÖRLÜ ISO | | | | | |
| 50654532M0 | | FLANGE / FLANŞLI | | | | | |
| 50654542M0 | | SHAFT / ŞAFTLI | | | | | |
| 50654512V0 | VACUUM<br>VAKUMLU | UNI | | | | | |
| 50654522V0 | | ISO ADAPTER / ADAPTÖRLÜ ISO | | | | | |
| 50654532V0 | | FLANGE / FLANŞLI | | | | | |
| 50654542V0 | | SHAFT / ŞAFTLI | | | | | |

| GEARBOX / ANA ŞANZIMANLAR | USED VEHICLES / KULLANILAN BAZI ARAÇLAR |
|---|---|
| M153 / M150 / M 155 / M151 /M52 / H50 / H 260 /4VB /5VB | HINO 300 DUTRO / TOYOTA WU 412L / DAIHATSU DELTA / TOYOTA DYNA H260-200-400 / HINO<br>611 WU355B WU710L-HKMQJV3 / WU700L-HKMQJV3 / WU720 / HINO 300-711 / WU342L /<br>WU302L / HINO DUTRO WU 720 |



Seçeceğiniz pompanın dönüş yönü, P.T.O. dönüş yönü ile ters olmalıdır.
The rotation of the choosen pump has to be opposite to the rotation of P.T.O.

P.T.O. montaj edildikten sonra ana şanzıman yağını tamamlayın.
Fill the oil of the gear box after mounting the P.T.O.

# ISUZU HINO LJ06S

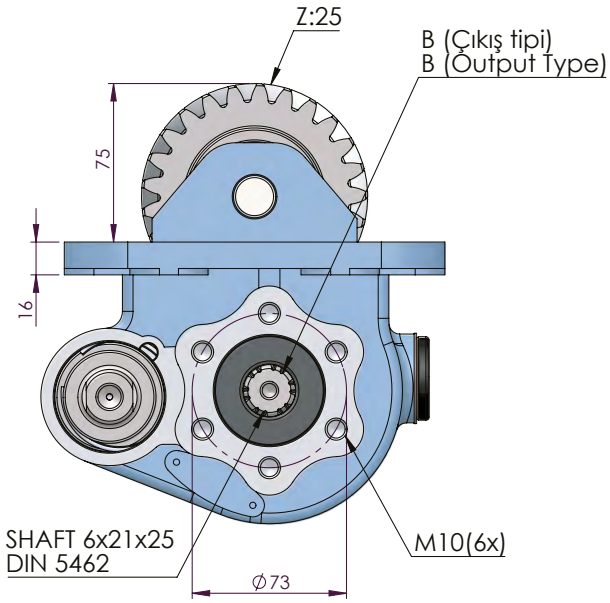




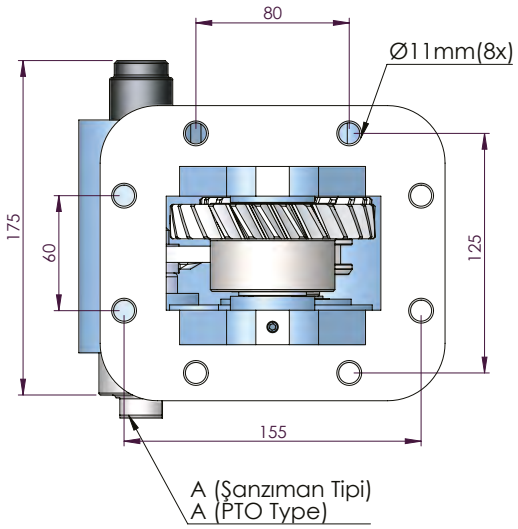


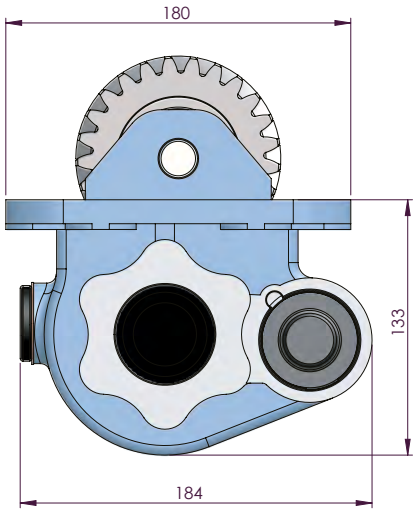


| CODE<br>KOD | TYPE<br>TİP (A) | MOUNTING TYPE<br>BAĞLANTI TİPİ (B) | MOUNTING SIDE<br>BAĞLANTI | TORQUE<br>TORK<br>(Kgm / Nm) | POWER<br>GÜÇ<br>(Hp / Kw) | SPEED<br>DEVİR<br>(RPM) | RATIO<br>ORAN |
|---|---|---|---|---|---|---|---|
| 50658512P0 | PNEUMATIC<br>PNÖMATİK | UNI | SIDE<br>YAN | 23 Kgm<br>225 Nm | 32 Hp<br>24 Kw | 2000 RPM | 1:1,2 |
| 50658522P0 | | ADAPTÖRLÜ ISO<br>ADAPTER ISO | | | | | |
| 50658532P0 | | FLANGE / FLANŞLI | | | | | |
| 50658542P0 | | SHAFT / ŞAFTLI | | | | | |

| GEARBOX / ANA ŞANZIMANLAR | USED VEHICLES / KULLANILAN BAZI ARAÇLAR |
|---|---|
| LJ06S / LJ05S (6,746-6,893-7,663-8,189-8,190-8,579-6.453 | HINO FG1J/GD1J/GD1JEUD-BAX/GD1JLUA-BAX/FG1JMUB-BGX/<br>FG1JPUB-BGX/GH1JGUDNGX/<br>GH1JMUA-NGX / HINO RK1JSKA / RK2HMLA GD1JEPD-BAX / FG1JGPE-<br>BGX / 51024 /<br>1221 HINO / HINO FL3H H07D FG1JJPA MPA PPA / RK1JSKA / AK1JRKA /<br>GD1JLUA / HINO<br>51221 HINO 500 / FG1J / FC9J |



Seçeceğiniz pompanın dönüş yönü, P.T.O. dönüş yönü ile ters olmalıdır.
The rotation of the choosen pump has to be opposite with the rotation of P.T.O.

P.T.O. montaj edildikten sonra ana şanzıman yağını tamamlayın.
Fill the oil of the gear box after mounting the P.T.O.

# ISUZU HINO LX06S



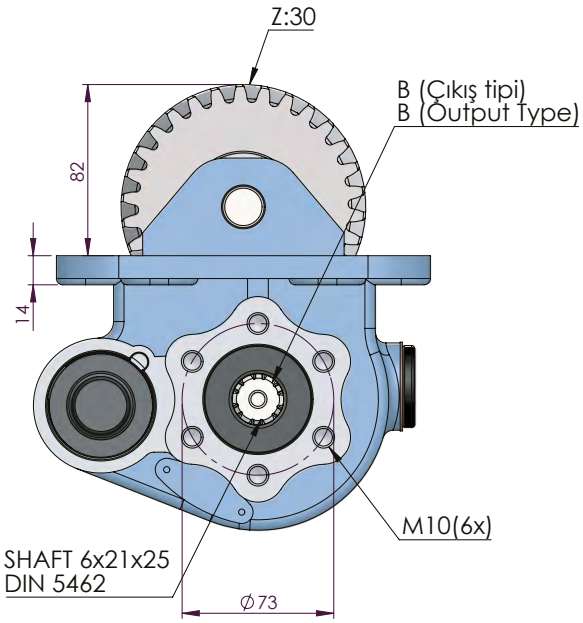


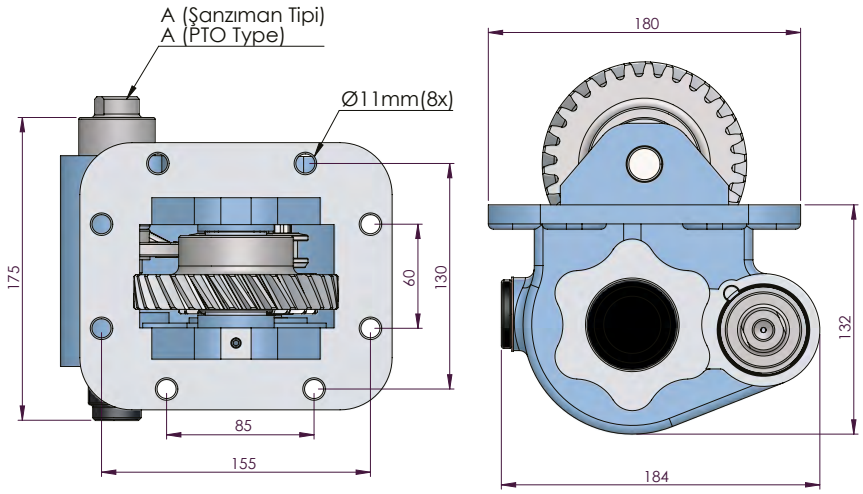


| CODE<br>KOD | TYPE<br>TİP (A) | MOUNTING TYPE<br>BAĞLANTI TİPİ (B) | MOUNTING SIDE<br>BAĞLANTI | TORQUE<br>TORK<br>(Kgm / Nm) | POWER<br>GÜÇ<br>(Hp / Kw) | SPEED<br>DEVİR<br>(RPM) | RATIO<br>ORAN |
|---|---|---|---|---|---|---|---|
| 50657512P0 | PNEUMATIC<br>PNÖMATİK | UNI | SIDE<br>YAN | 23 Kgm<br>225 Nm | 32 Hp<br>24 Kw | 2000 RPM | 1:1,6 |
| 50657522P0 | | ADAPTÖRLÜ ISO<br>ADAPTER ISO | | | | | |
| 50657532P0 | | FLANGE / FLANŞLI | | | | | |
| 50657542P0 | | SHAFT / ŞAFTLI | | | | | |

| GEARBOX / ANA ŞANZIMANLAR | USED VEHICLES / KULLANILAN BAZI ARAÇLAR |
|---|---|
| LX06S / LX06X LX05S (6,515-8,190) | HINOFG1J/GD1J/GD1JEUD-BAX/GD1JLUA-BAX/FG1JMUB-BGX/FG1JPUB-BGX/<br>GH1JGUDNGX/<br>GH1JMUA-NGX / 51021 / 51017 / 51022 / 51322 / FT1JEUA-CGX / FT1JGUA-CGX /<br>FC4JJUA-NNL / FT1JEUA-HGL / GT1JFUA / GT1JHUA / HINO FC9J FC4JJRA JERA<br>JLRA / FG8J |



Seçeceğiniz pompanın dönüş yönü, P.T.O. dönüş yönü ile ters olmalıdır.
The rotation of the choosen pump has to be opposite to the rotation of P.T.O.

P.T.O. montaj edildikten sonra ana şanzıman yağını tamamlayın.
Fill the oil of the gear box after mounting the P.T.O.

# ISUZU HINO L100-108

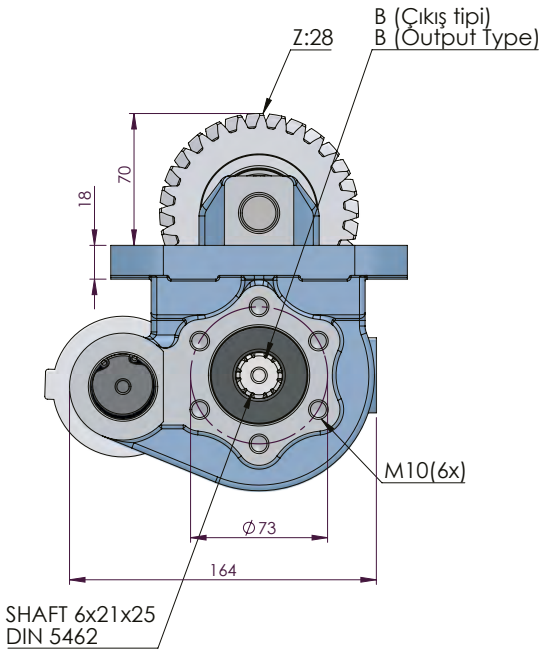




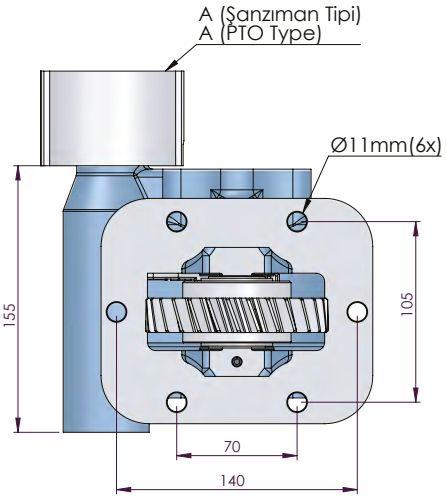


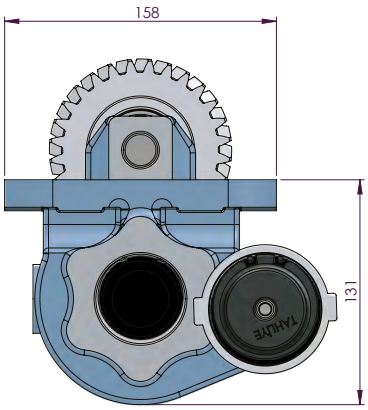


| CODE<br>KOD | TYPE<br>TİP (A) | MOUNTING TYPE<br>BAĞLANTI TİPİ (B) | MOUNTING SIDE<br>BAĞLANTI | TORQUE<br>TORK<br>(Kgm / Nm) | POWER<br>GÜÇ<br>(Hp / Kw) | SPEED<br>DEVİR<br>(RPM) | RATIO<br>ORAN |
|---|---|---|---|---|---|---|---|
| 50650512M0 | MECHANIC<br>MEKANİK | UNI | SIDE<br>YAN | 18 Kgm<br>182 Nm | 15 Hp<br>11 Kw | 600 RPM | 1:1,3 |
| 50650522M0 | | ISO ADAPTER / ADAPTÖRLÜ ISO | | | | | |
| 50650532M0 | | FLANGE / FLANŞLI | | | | | |
| 50650542M0 | | SHAFT / ŞAFTLI | | | | | |
| 50650512V0 | VACUUM<br>VAKUMLU | UNI | | | | | |
| 50650522V0 | | ISO ADAPTER / ADAPTÖRLÜ ISO | | | | | |
| 50650532V0 | | FLANGE / FLANŞLI | | | | | |
| 50650542V0 | | SHAFT / ŞAFTLI | | | | | |

| GEARBOX / ANA ŞANZIMANLAR | USED VEHICLES / KULLANILAN BAZI ARAÇLAR |
|---|---|
| 33111-2065 / 08V0484 / 11Y0563 / 33121-1990 / 33121-1980 | HINO L-100/FBC 112 SA |

Seçeceğiniz pompanın dönüş yönü, P.T.O. dönüş yönü ile ters olmalıdır.
The rotation of the choosen pump has to be opposite with the rotation of P.T.O.

P.T.O. montaj edildikten sonra ana şanzıman yağını tamamlayın.
Fill the oil of the gear box after mounting the P.T.O.

# MITSUBISHI M1S5



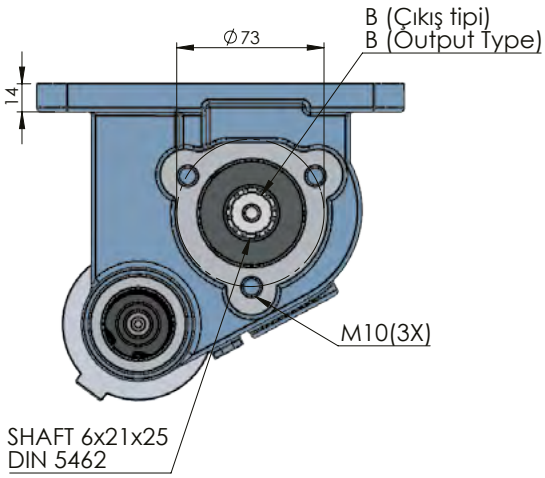


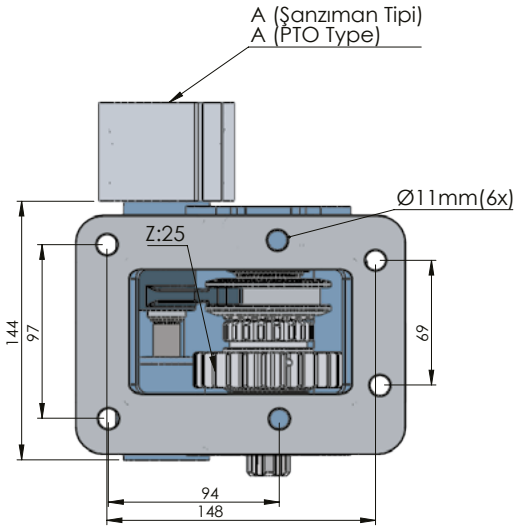


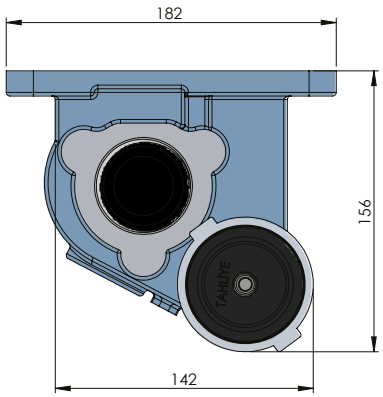


| CODE<br>KOD | TYPE<br>TİP (A) | MOUNTING TYPE<br>BAĞLANTI TİPİ (B) | MOUNTING SIDE<br>BAĞLANTI | TORQUE<br>TORK<br>(Kgm / Nm) | POWER<br>GÜÇ<br>(Hp / Kw) | SPEED<br>DEVİR<br>(RPM) | RATIO<br>ORAN |
|---|---|---|---|---|---|---|---|
| 50710512M0 | MECHANIC<br>MEKANİK | UNI | SIDE<br>YAN | 18,2Kgm<br>178,5 Nm | 9,4 Hp<br>7 Kw | 375 RPM | 1:1 |
| 50710522M0 | | ISO ADAPTER / ADAPTÖRLÜ ISO | | | | | |
| 50710532M0 | | FLANGE / FLANŞLI | | | | | |
| 50710542M0 | | SHAFT / ŞAFTLI | | | | | |
| 50710512V0 | VACUUM<br>VAKUMLU | UNI | | | | | |
| 50710522V0 | | ISO ADAPTER / ADAPTÖRLÜ ISO | | | | | |
| 50710532V0 | | FLANGE / FLANŞLI | | | | | |
| 50710542V0 | | SHAFT / ŞAFTLI | | | | | |

| GEARBOX / ANA ŞANZIMANLAR | USED VEHICLES / KULLANILAN BAZI ARAÇLAR |
|---|---|
| M1S5 - M2S5 - M3S5 (4,444-5,494-5,886-5,181) / DYMOS V1 (375 RPM, SAĞ) | 444-449 CANTER MITSUBISHI(704) / HT 1016698 / 430505H503 / SHERPA INDIA ŞANZIMANI<br>DYMOS H 350 / 3F 412 / HD 50-72-77 HYUNDAI / HD 65 / 03RO4495 / 03RO4499 03RO4493 /<br>HD 35 / HT 102T00336 / 519 / 539 / 535 / 649 CANTER |



Seçeceğiniz pompanın dönüş yönü, P.T.O. dönüş yönü ile ters olmalıdır.
The rotation of the choosen pump has to be opposite to the rotation of P.T.O.

P.T.O. montaj edildikten sonra ana şanzıman yağını tamamlayın.
Fill the oil of the gear box after mounting the P.T.O.

# MITSUBISHI M015S5

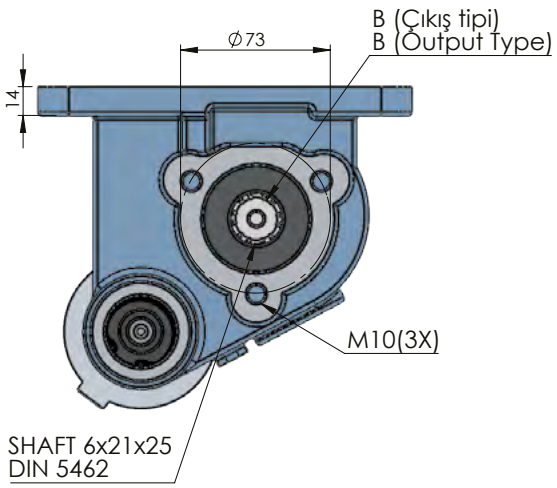




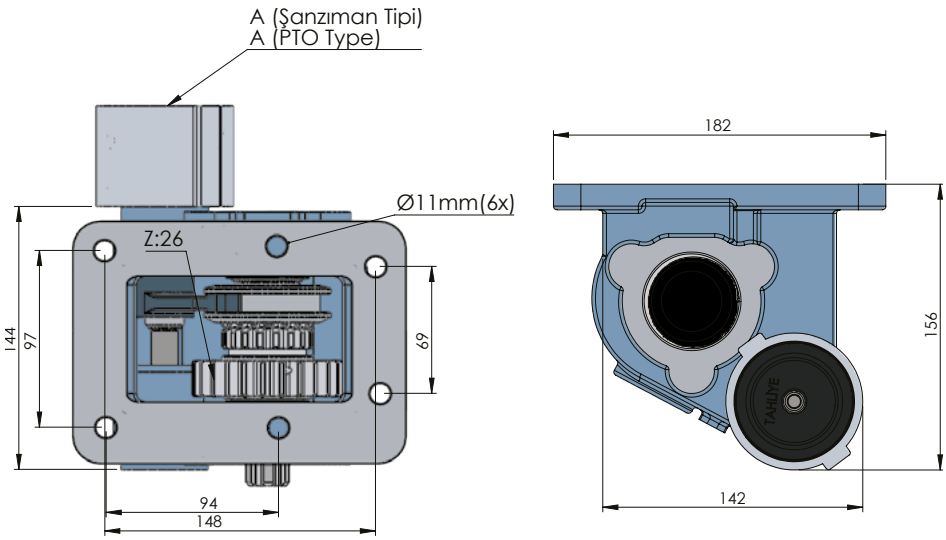


| CODE<br>KOD | TYPE<br>TİP (A) | MOUNTING TYPE<br>BAĞLANTI TİPİ (B) | MOUNTING SIDE<br>BAĞLANTI | TORQUE<br>TORK<br>(Kgm / Nm) | POWER<br>GÜÇ<br>(Hp / Kw) | SPEED<br>DEVİR<br>(RPM) | RATIO<br>ORAN |
|---|---|---|---|---|---|---|---|
| 50712512M0 | MECHANIC<br>MEKANİK | UNI | SIDE<br>YAN | 24 Kgm<br>235,5 Nm | 11,7 Hp<br>8,7 Kw | 375 RPM | 1:1 |
| 50712522M0 | | ISO ADAPTER<br>ADAPTÖRLÜ ISO | | | | | |
| 50712532M0 | | FLANGE<br>FLANŞLI | | | | | |
| 50712542M0 | | SHAFT<br>ŞAFTLI | | | | | |
| 50712512V0 | VACUUM<br>VAKUMLU | UNI | | | | | |
| 50712522V0 | | ISO ADAPTER<br>ADAPTÖRLÜ ISO | | | | | |
| 50712532V0 | | FLANGE<br>FLANŞLI | | | | | |
| 50712542V0 | | SHAFT<br>ŞAFTLI | | | | | |

| GEARBOX / ANA ŞANZIMANLAR | USED VEHICLES / KULLANILAN BAZI ARAÇLAR |
|---|---|
| M0 15 S 5 (4,733) (375 RPM, SAĞ) | EURO 2 FE71AB / FE 454 / FE 511 / FE 711 MITSUBISHI (733) |

Seçeceğiniz pompanın dönüş yönü, P.T.O. dönüş yönü ile ters olmalıdır.
The rotation of the choosen pump has to be opposite with the rotation of P.T.O.

P.T.O. montaj edildikten sonra ana şanzıman yağını tamamlayın.
Fill the oil of the gear box after mounting the P.T.O.

# MITSUBISHI M025S5



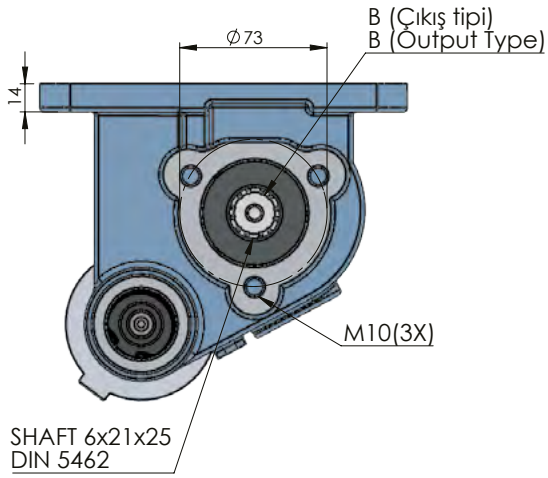


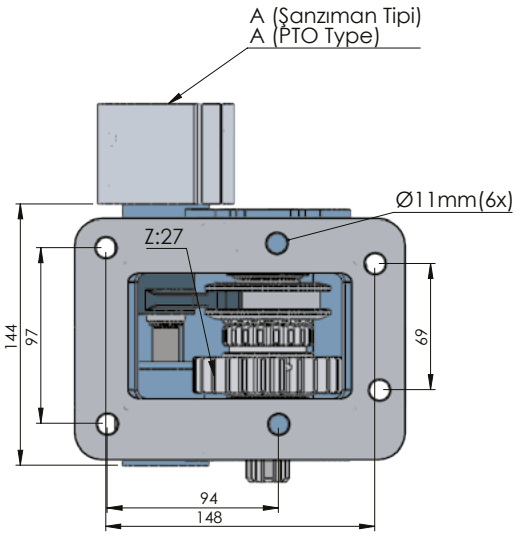


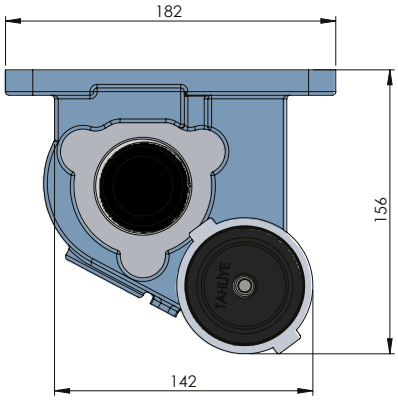


| CODE<br>KOD | TYPE<br>TİP (A) | MOUNTING TYPE<br>BAĞLANTI TİPİ (B) | MOUNTING SIDE<br>BAĞLANTI | TORQUE<br>TORK<br>(Kgm / Nm) | POWER<br>GÜÇ<br>(Hp / Kw) | SPEED<br>DEVİR<br>(RPM) | RATIO<br>ORAN |
|---|---|---|---|---|---|---|---|
| 50713512M0 | MECHANIC<br>MEKANİK | UNI | SIDE<br>YAN | 21,1 Kgm<br>207 Nm | 10,2 Hp<br>7,6 Kw | 350 RPM | 1:1 |
| 50713522M0 | | ISO ADAPTER<br>ADAPTÖRLÜ ISO | | | | | |
| 50713532M0 | | FLANGE<br>FLANŞLI | | | | | |
| 50713542M0 | | SHAFT<br>ŞAFTLI | | | | | |
| 50713512V0 | VACUUM<br>VAKUMLU | UNI | | | | | |
| 50713522V0 | | ISO ADAPTER<br>ADAPTÖRLÜ ISO | | | | | |
| 50713532V0 | | FLANGE<br>FLANŞLI | | | | | |
| 50713542V0 | | SHAFT<br>ŞAFTLI | | | | | |

| GEARBOX / ANA ŞANZIMANLAR | USED VEHICLES / KULLANILAN BAZI ARAÇLAR |
|---|---|
| MO 25 S 5 / MO 25 T1 (4,28-4,748-5.181) (350 RPM, SAĞ) | EURO 2 FE83PC / 635 FE - 515 FE - 519 FE - FE 534 - FE 544 - FB 634 - FE 639 C - 839 FE130C1<br>CANTER 2.0 SUPER LOW MITSUBISHI (739) / FE 84 |



Seçeceğiniz pompanın dönüş yönü, P.T.O. dönüş yönü ile ters olmalıdır.
The rotation of the choosen pump has to be opposite to the rotation of P.T.O.

P.T.O. montaj edildikten sonra ana şanzıman yağını tamamlayın.
Fill the oil of the gear box after mounting the P.T.O.

# MITSUBISHI M026S5

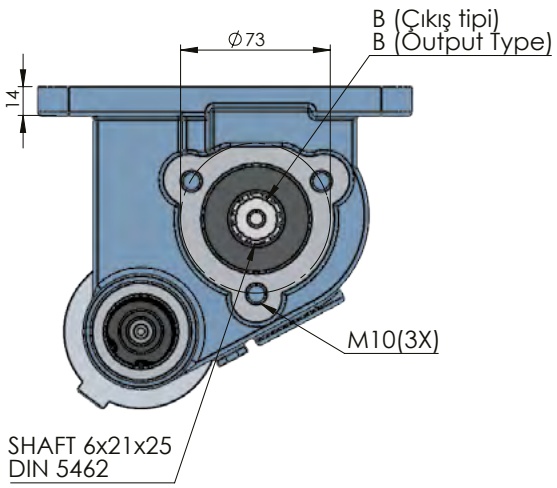




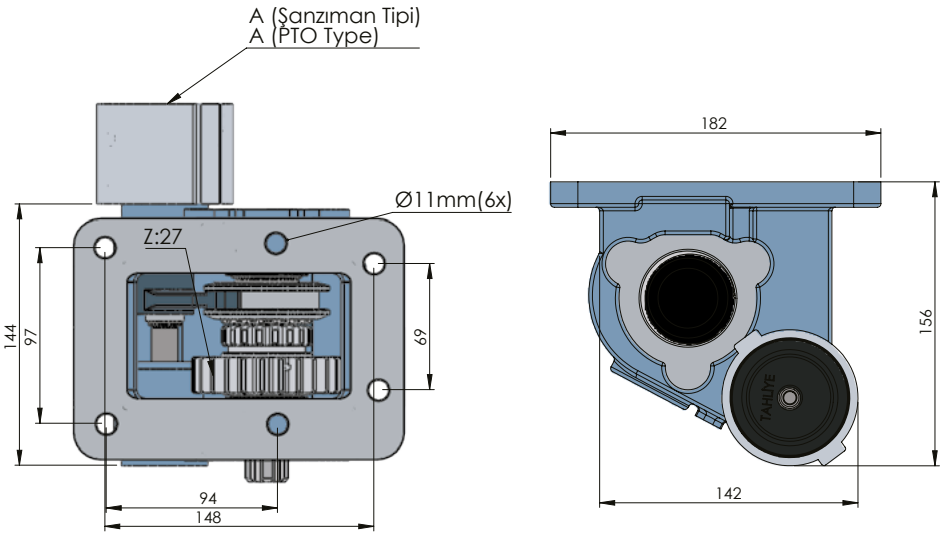


| CODE<br>KOD | TYPE<br>TİP (A) | MOUNTING TYPE<br>BAĞLANTI TİPİ (B) | MOUNTING SIDE<br>BAĞLANTI | TORQUE<br>TORK<br>(Kgm / Nm) | POWER<br>GÜÇ<br>(Hp / Kw) | SPEED<br>DEVİR<br>(RPM) | RATIO<br>ORAN |
|---|---|---|---|---|---|---|---|
| 50714512M0 | MECHANIC<br>MEKANİK | UNI | SIDE<br>YAN | 21,1 Kgm<br>207 Nm | 10,2 Hp<br>7,6 Kw | 350 RPM | 1:1 |
| 50714522M0 | | ISO ADAPTER<br>ADAPTÖRLÜ ISO | | | | | |
| 50714532M0 | | FLANGE<br>FLANŞLI | | | | | |
| 50714542M0 | | SHAFT<br>ŞAFTLI | | | | | |
| 50714512V0 | VACUUM<br>VAKUMLU | UNI | | | | | |
| 50714522V0 | | ISO ADAPTER<br>ADAPTÖRLÜ ISO | | | | | |
| 50714532V0 | | FLANGE<br>FLANŞLI | | | | | |
| 50714542V0 | | SHAFT<br>ŞAFTLI | | | | | |

| GEARBOX / ANA ŞANZIMANLAR | USED VEHICLES / KULLANILAN BAZI ARAÇLAR |
|---|---|
| M0 26 S 5 / 27 S 5 (4,748) | FE 730-FE 839EURO 4 FE71BB / FE73BE / FE83BC |

Seçeceğiniz pompanın dönüş yönü, P.T.O. dönüş yönü ile ters olmalıdır.
The rotation of the choosen pump has to be opposite with the rotation of P.T.O.

P.T.O. montaj edildikten sonra ana şanzıman yağını tamamlayın.
Fill the oil of the gear box after mounting the P.T.O.

# MITSUBISHI M035S5



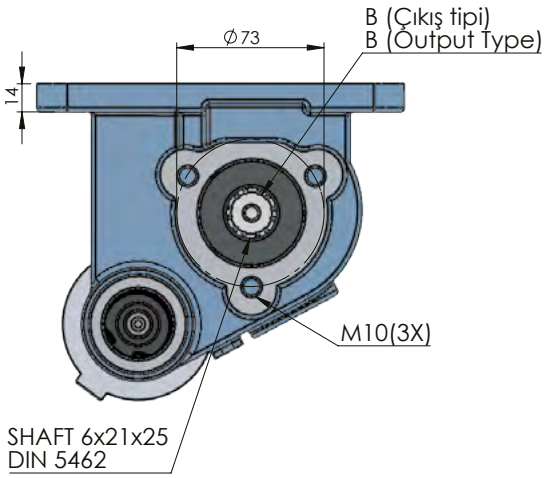


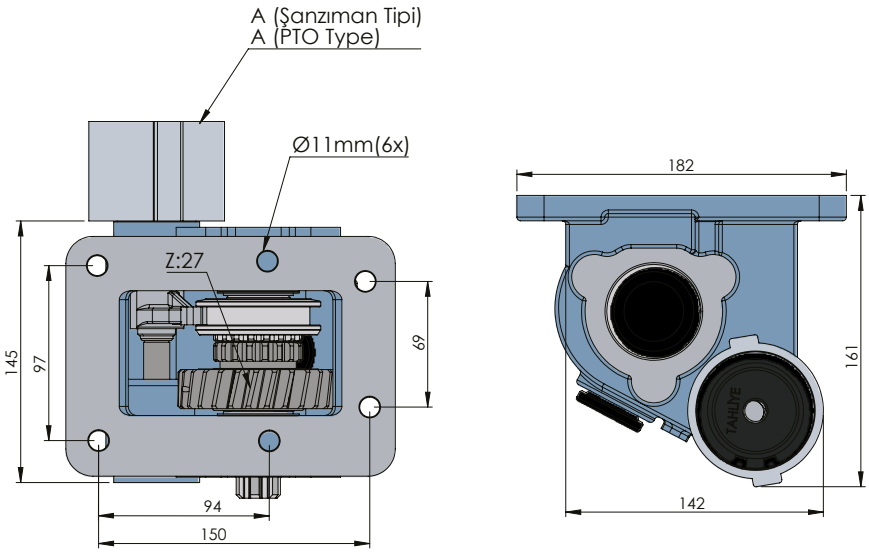


| CODE<br>KOD | TYPE<br>TİP (A) | MOUNTING TYPE<br>BAĞLANTI TİPİ (B) | MOUNTING SIDE<br>BAĞLANTI | TORQUE<br>TORK<br>(Kgm / Nm) | POWER<br>GÜÇ<br>(Hp / Kw) | SPEED<br>DEVİR<br>(RPM) | RATIO<br>ORAN |
|---|---|---|---|---|---|---|---|
| 50724512M0 | ORIGINIAL TYPE<br>ORİJİNAL TİP | UNI | SIDE<br>YAN | 24,8 Kgm<br>243,3 Nm | 11,4 Hp<br>8,5 Kw | 440 | 1:1 |
| 50724522M0 | | ISO ADAPTER / ADAPTÖRLÜ ISO | | | | | |
| 50724532M0 | | FLANGE / FLANŞLI | | | | | |
| 50724542M0 | | SHAFT / ŞAFTLI | | | | | |
| 50715512M0 | MECHANIC<br>MEKANİK | UNI | | 21,1 Kgm<br>207 Nm | 10,2 Hp<br>7,6 Kw | 350 | |
| 50715522M0 | | ISO ADAPTER / ADAPTÖRLÜ ISO | | | | | |
| 50715532M0 | | FLANGE / FLANŞLI | | | | | |
| 50715542M0 | | SHAFT / ŞAFTLI | | | | | |
| 50715512V0 | VACUUM<br>VAKUMLU | UNI | | | | | |
| 50715522V0 | | ISO ADAPTER / ADAPTÖRLÜ ISO | | | | | |
| 50715532V0 | | FLANGE / FLANŞLI | | | | | |
| 50715542V0 | | SHAFT / ŞAFTLI | | | | | |

| GEARBOX / ANA ŞANZIMANLAR | USED VEHICLES / KULLANILAN BAZI ARAÇLAR |
|---|---|
| MO 35 S 5 (5,380-5,52) / MO 35 T3 / 35 S 6 / 35V013 (350 RPM, SAĞ) | EURO 2 FE85PE / PG / FE 649 - 659 - FE 859 E MITSUBISHI / FE150C1-150E1-FE150E2 CANTER<br>2.0T WIDE CAB FG145C1 4X4 CANTER 2.5T-FE150W1 3.5T-150G1 4T-150G2 4.5T (722-714) HD<br>65/72 HYUNDAI HYUNDAI DYMOS / 657 CANTER / FE84PE6L |



Seçeceğiniz pompanın dönüş yönü, P.T.O. dönüş yönü ile ters olmalıdır.
The rotation of the choosen pump has to be opposite to the rotation of P.T.O.

P.T.O. montaj edildikten sonra ana şanzıman yağını tamamlayın.
Fill the oil of the gear box after mounting the P.T.O.

# MITSUBISHI M036S6

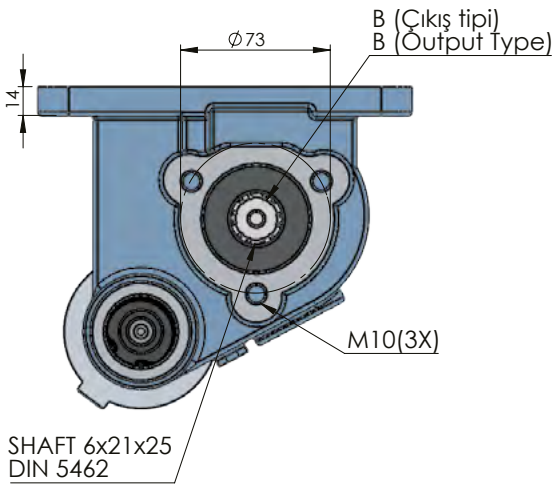




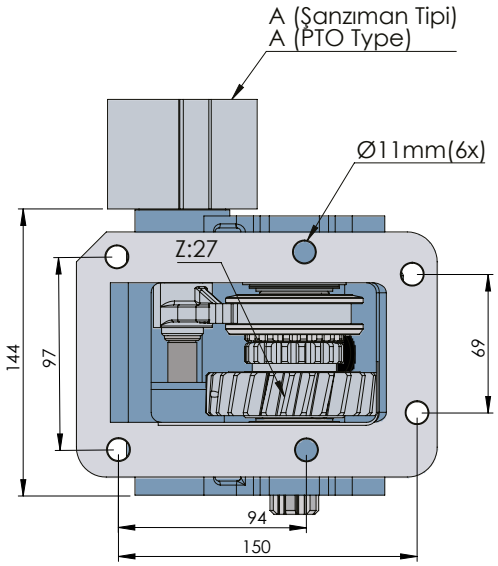


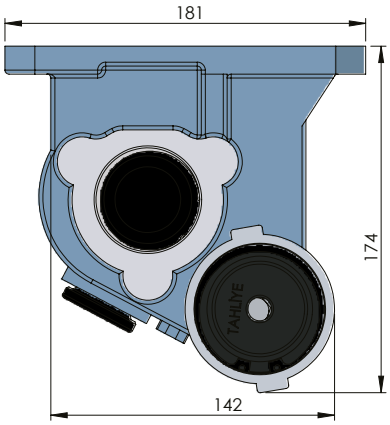


| CODE<br>KOD | TYPE<br>TİP (A) | MOUNTING TYPE<br>BAĞLANTI TİPİ (B) | MOUNTING SIDE<br>BAĞLANTI | TORQUE<br>TORK<br>(Kgm / Nm) | POWER<br>GÜÇ<br>(Hp / Kw) | SPEED<br>DEVİR<br>(RPM) | RATIO<br>ORAN |
|---|---|---|---|---|---|---|---|
| 50717512M0 | MECHANIC<br>MEKANİK | UNI | SIDE<br>YAN | 22.8 Kgm<br>223 Nm | 31 Hp<br>23.3 Kw | 500 RPM | 1:1 |
| 50717522M0 | | ISO ADAPTER<br>ADAPTÖRLÜ ISO | | | | | |
| 50717532M0 | | FLANGE<br>FLANŞLI | | | | | |
| 50717542M0 | | SHAFT<br>ŞAFTLI | | | | | |
| 50717512V0 | VACUUM<br>VAKUMLU | UNI | | | | | |
| 50717522V0 | | ISO ADAPTER<br>ADAPTÖRLÜ ISO | | | | | |
| 50717532V0 | | FLANGE<br>FLANŞLI | | | | | |
| 50717542V0 | | SHAFT<br>ŞAFTLI | | | | | |

| GEARBOX / ANA ŞANZIMANLAR | USED VEHICLES / KULLANILAN BAZI ARAÇLAR |
|---|---|
| MO 36 S 6 (5,400) / 36 S 5 / 36 A 6 | FE 859 G EURO 4 FE85BE / FE85BG / 7C15 |

Seçeceğiniz pompanın dönüş yönü, P.T.O. dönüş yönü ile ters olmalıdır.
The rotation of the choosen pump has to be opposite with the rotation of P.T.O.

P.T.O. montaj edildikten sonra ana şanzıman yağını tamamlayın.
Fill the oil of the gear box after mounting the P.T.O.

# MITSUBISHI M038S5



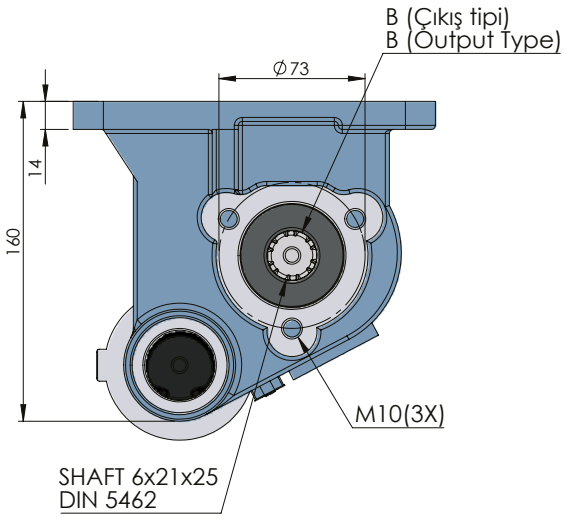


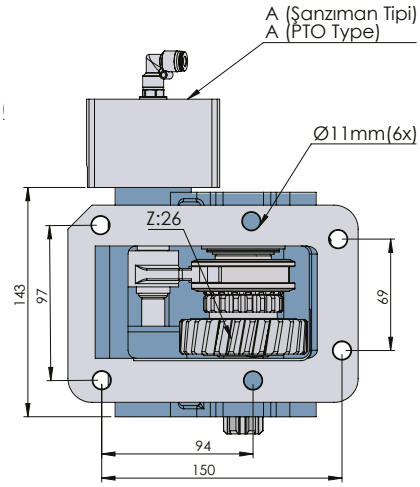


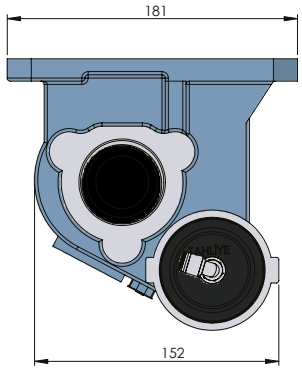


| CODE<br>KOD | TYPE<br>TİP (A) | MOUNTING TYPE<br>BAĞLANTI TİPİ (B) | MOUNTING SIDE<br>BAĞLANTI | TORQUE<br>TORK<br>(Kgm / Nm) | POWER<br>GÜÇ<br>(Hp / Kw) | SPEED<br>DEVİR<br>(RPM) | RATIO<br>ORAN |
|---|---|---|---|---|---|---|---|
| 50719512M0 | MECHANIC<br>MEKANİK | UNI | SIDE<br>YAN | 18.35 Kgm<br>180 Nm | 21.75 Hp<br>16 Kw | 450 RPM | 1:1 |
| 50719522M0 | | ISO ADAPTER / ADAPTÖRLÜ ISO | | | | | |
| 50719532M0 | | FLANGE / FLANŞLI | | | | | |
| 50719542M0 | | SHAFT / ŞAFTLI | | | | | |
| 50719512V0 | VACUUM<br>VAKUMLU | UNI | | | | | |
| 50719522V0 | | ISO ADAPTER / ADAPTÖRLÜ ISO | | | | | |
| 50719532V0 | | FLANGE / FLANŞLI | | | | | |
| 50719542V0 | | SHAFT / ŞAFTLI | | | | | |
| 50719512V1 | VACUUM WITH SWITCH<br>VAKUMLU MÜŞÜRLÜ | UNI | | | | | |
| 50719522V1 | | ISO ADAPTER / ADAPTÖRLÜ ISO | | | | | |
| 50719532V1 | | FLANGE / FLANŞLI | | | | | |
| 50719542V1 | | SHAFT / ŞAFTLI | | | | | |

| GEARBOX / ANA ŞANZIMANLAR | USED VEHICLES / KULLANILAN BAZI ARAÇLAR |
|---|---|
| MO 38 S5- MO 38 S 6 | EURO 5 TF A35L DUONIC / TF B35 DUONIC / TF B75 DUONIC / TF B75L DUONIC / 3C13 / 7C15 / 6C18 / FE 125 / FEC52S FG 4X4 / FGB72S / FE 160 / FEC72S / FEC72W / FE 180 / FEC92S / 515 / 516 / 715 / 815 CANTER CANTER 516-2.0TFEA45C2/2471-MIT-Canter-2.0T-FEB45C2E2nt2/ 4.0TFEW60-75E2/4.5TFEW82G2/2.0TFEW45E2 CANTER 413 / CANTER 515 / CANTER 615 / CANTER 715 / CANTER 815 / CANTER 918 / B35L / B75L EURO 5 FEA21EL3SA21 / FEB21CL3SA22 / FEB91EL3SA23 / FEB91GL3SA23 / FEB91EL3SA29 |



Seçeceğiniz pompanın dönüş yönü, P.T.O. dönüş yönü ile ters olmalıdır.
The rotation of the choosen pump has to be opposite to the rotation of P.T.O.

P.T.O. montaj edildikten sonra ana şanzıman yağını tamamlayın.
Fill the oil of the gear box after mounting the P.T.O.

# MITSUBISHI M050S6

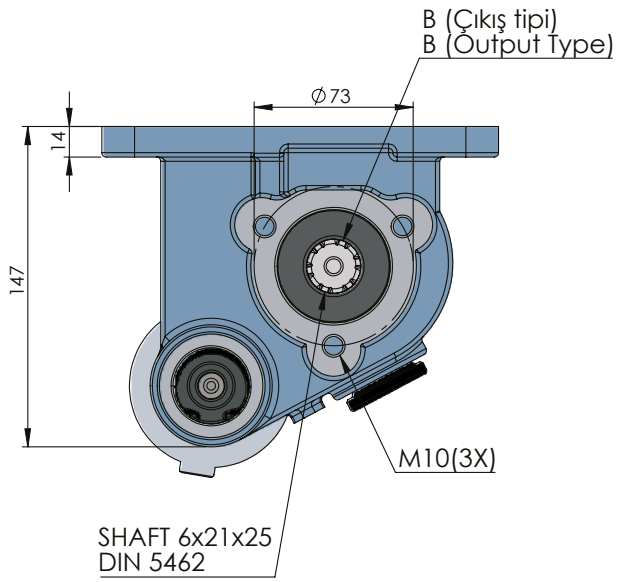




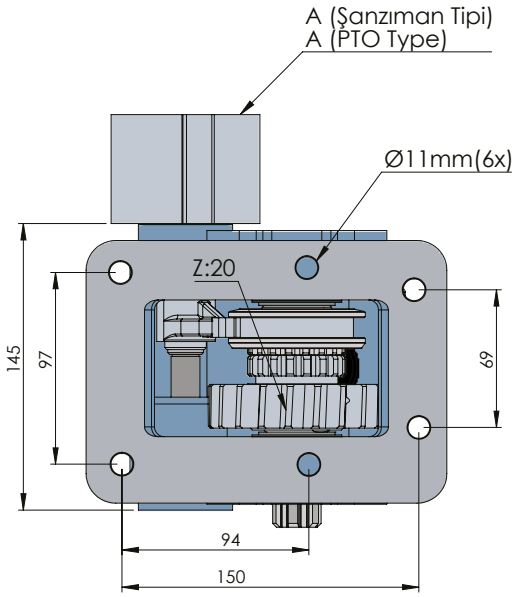


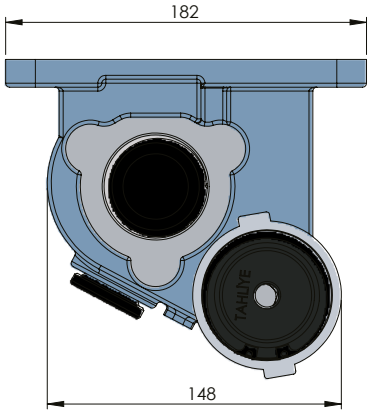


| CODE<br>KOD | TYPE<br>TİP (A) | MOUNTING TYPE<br>BAĞLANTI TİPİ (B) | MOUNTING SIDE<br>BAĞLANTI | TORQUE<br>TORK<br>(Kgm / Nm) | POWER<br>GÜÇ<br>(Hp / Kw) | SPEED<br>DEVİR<br>(RPM) | RATIO<br>ORAN |
|---|---|---|---|---|---|---|---|
| 50720512M0 | MECHANIC<br>MEKANİK | UNI | SIDE<br>YAN | 20 Kgm<br>200 Nm | 28 Hp<br>21 Kw | 750 RPM | 1:1 |
| 50720522M0 | | ISO ADAPTER / ADAPTÖRLÜ ISO | | | | | |
| 50720532M0 | | FLANGE / FLANŞLI | | | | | |
| 50720542M0 | | SHAFT / ŞAFTLI | | | | | |
| 50720512V0 | VACUUM<br>VAKUMLU | UNI | | | | | |
| 50720522V0 | | ISO ADAPTER / ADAPTÖRLÜ ISO | | | | | |
| 50720532V0 | | FLANGE / FLANŞLI | | | | | |
| 50720542V0 | | SHAFT / ŞAFTLI | | | | | |

| GEARBOX / ANA ŞANZIMANLAR | USED VEHICLES / KULLANILAN BAZI ARAÇLAR |
|---|---|
| MO 50 S 6 | FH 215 DRAGON MITSUBISHI / 500 HYUNDAI(802) / FK 750 |

Seçeceğiniz pompanın dönüş yönü, P.T.O. dönüş yönü ile ters olmalıdır.
The rotation of the choosen pump has to be opposite with the rotation of P.T.O.

P.T.O. montaj edildikten sonra ana şanzıman yağını tamamlayın.
Fill the oil of the gear box after mounting the P.T.O.

# MITSUBISHI MO60S5



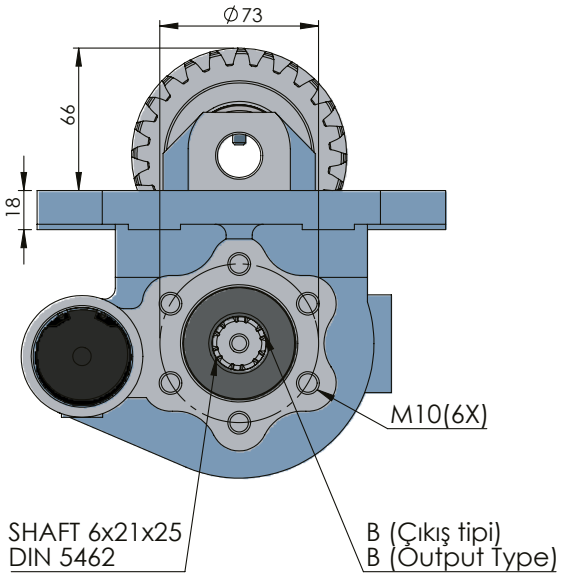


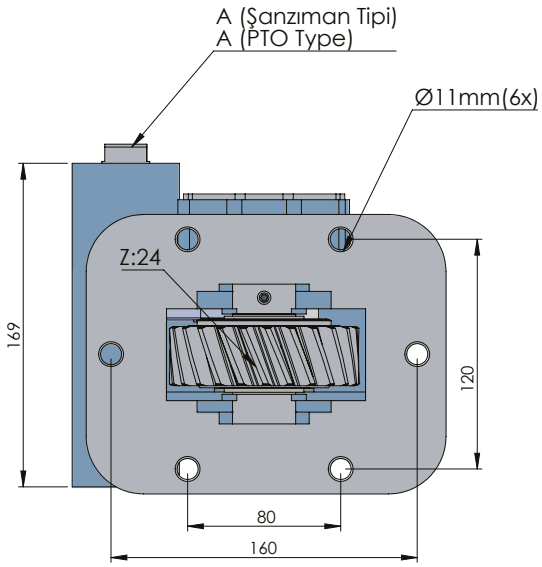


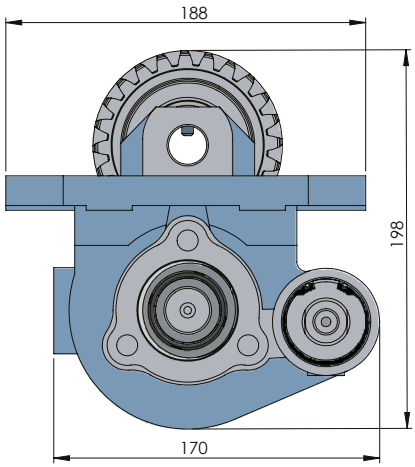


| CODE<br>KOD | TYPE<br>TİP (A) | MOUNTING TYPE<br>BAĞLANTI TİPİ (B) | MOUNTING SIDE<br>BAĞLANTI | TORQUE<br>TORK<br>(Kgm / Nm) | POWER<br>GÜÇ<br>(Hp / Kw) | SPEED<br>DEVİR<br>(RPM) | RATIO<br>ORAN |
|---|---|---|---|---|---|---|---|
| 50721512M0 | MECHANIC<br>MEKANİK | UNI | SIDE<br>YAN | 24.3 Kgm<br>238,5 Nm | 25 Kw<br>33,5 Hp | 550 RPM | 1:1.15 |
| 50721522M0 | | ISO ADAPTER<br>ADAPTÖRLÜ ISO | | | | | |
| 50721532M0 | | FLANGE<br>FLANŞLI | | | | | |
| 50721542M0 | | SHAFT<br>ŞAFTLI | | | | | |
| 50721512P0 | PNEUMATIC<br>PNÖMATİK | UNI | | | | | |
| 50721522P0 | | ISO ADAPTER<br>ADAPTÖRLÜ ISO | | | | | |
| 50721532P0 | | FLANGE<br>FLANŞLI | | | | | |
| 50721542P0 | | SHAFT<br>ŞAFTLI | | | | | |

| GEARBOX / ANA ŞANZIMANLAR | USED VEHICLES / KULLANILAN BAZI ARAÇLAR |
|---|---|
| MO 60S5 / 50S5 / 50S6 (Z=35) ( 6,748 - 6,875 ) MO 50S5 A149 ME638314 ( 6,875 / 1,000) | FIAT IVECO / 65.15-79.13-79.14-80.14 IVECO / 65.12-79.12-95.14-100.13-109.14-135.14<br>ZETA IVECO 79.13-79.14-65.15-100.13-100.16-135.14 IVECO |



Seçeceğiniz pompanın dönüş yönü, P.T.O. dönüş yönü ile ters olmalıdır.
The rotation of the choosen pump has to be opposite to the rotation of P.T.O.

P.T.O. montaj edildikten sonra ana şanzıman yağını tamamlayın.
Fill the oil of the gear box after mounting the P.T.O.

# FOTON ATLAS 1

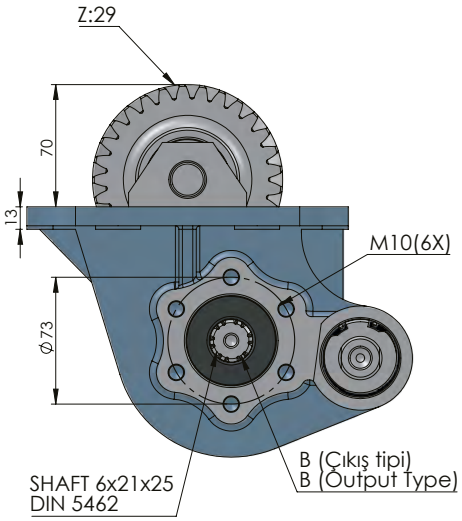




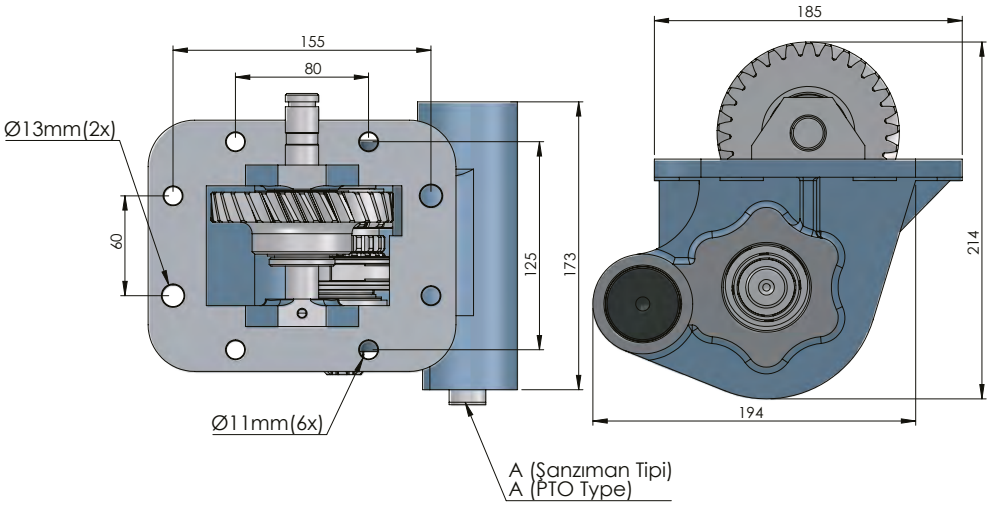


| CODE<br>KOD | TYPE<br>TİP (A) | MOUNTING TYPE<br>BAĞLANTI TİPİ (B) | MOUNTING SIDE<br>BAĞLANTI | TORQUE<br>TORK<br>(Kgm / Nm) | POWER<br>GÜÇ<br>(Hp / Kw) | SPEED<br>DEVİR<br>(RPM) | RATIO<br>ORAN |
|---|---|---|---|---|---|---|---|
| 51910512P0 | PNEUMATIC<br>PNÖMATİK | UNI | SIDE<br>YAN | 23 Kgm<br>225 Nm | 31,6 Hp<br>23,6 Kw | 1000 RPM | 1:1,16 |
| 51910522P0 | | ISO ADAPTER<br>ADAPTÖRLÜ ISO | | | | | |
| 51910532P0 | | FLANGE<br>FLANŞLI | | | | | |
| 51910542P0 | | SHAFT<br>ŞAFTLI | | | | | |

| GEARBOX / ANA ŞANZIMANLAR | USED VEHICLES / KULLANILAN BAZI ARAÇLAR |
|---|---|
| WLY6S51B- 40A-00 | L0171010184A0 -5,51 FOTON Otokar Atlas BAŞER Otokar Atlas - Foton 1061 - Foton Aumark<br>BJ 1039-1051-1061 - Shacman -Sino Truck - Howo - Wan Li Yang Saipa diesel Alvand 6.5 ton |

Seçeceğiniz pompanın dönüş yönü, P.T.O. dönüş yönü ile ters olmalıdır.
The rotation of the choosen pump has to be opposite with the rotation of P.T.O.

P.T.O. montaj edildikten sonra ana şanzıman yağını tamamlayın.
Fill the oil of the gear box after mounting the P.T.O.

# FOTON ATLAS 2



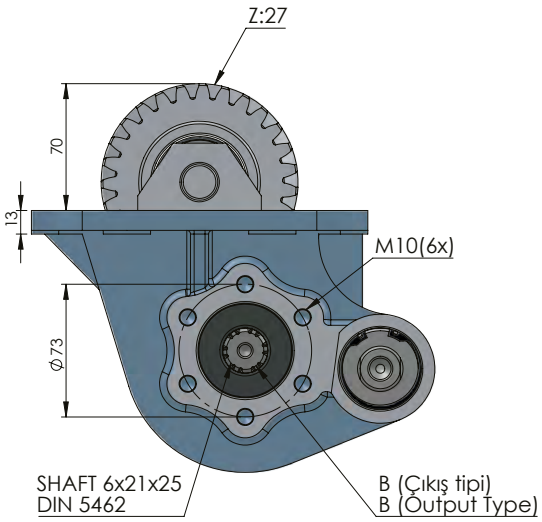


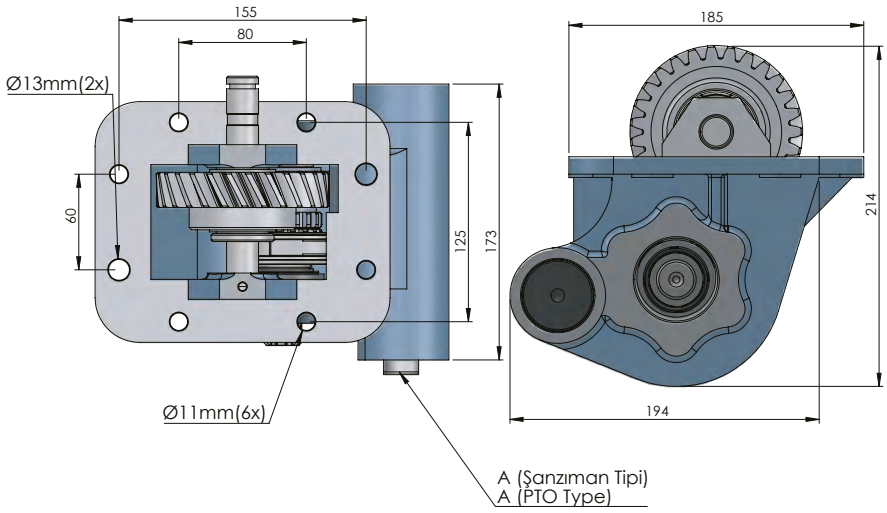


| CODE<br>KOD | TYPE<br>TİP (A) | MOUNTING TYPE<br>BAĞLANTI TİPİ (B) | MOUNTING SIDE<br>BAĞLANTI | TORQUE<br>TORK<br>(Kgm / Nm) | POWER<br>GÜÇ<br>(Hp / Kw) | SPEED<br>DEVİR<br>(RPM) | RATIO<br>ORAN |
|---|---|---|---|---|---|---|---|
| 51911512P0 | PNEUMATIC<br>PNÖMATİK | UNI | SIDE<br>YAN | 23 Kgm<br>225 Nm | 31,6 Hp<br>23,6 Kw | 1000 RPM | 1:1,12 |
| 51911522P0 | | ISO ADAPTER<br>ADAPTÖRLÜ ISO | | | | | |
| 51911532P0 | | FLANGE<br>FLANŞLI | | | | | |
| 51911542P0 | | SHAFT<br>ŞAFTLI | | | | | |

| GEARBOX / ANA ŞANZIMANLAR | USED VEHICLES / KULLANILAN BAZI ARAÇLAR |
|---|---|
| WLY6S51B-40B-00 | LO171010184AQ 5,522 - 0,795-4,0L FOTON Otokar Atlas BAŞER |



Seçeceğiniz pompanın dönüş yönü, P.T.O. dönüş yönü ile ters olmalıdır.
The rotation of the choosen pump has to be opposite to the rotation of P.T.O.

P.T.O. montaj edildikten sonra ana şanzıman yağını tamamlayın.
Fill the oil of the gear box after mounting the P.T.O.

# LIAZ 1 SINGLE GEAR ISO

## LIAZ 1 TEK DİŞLİ ISO

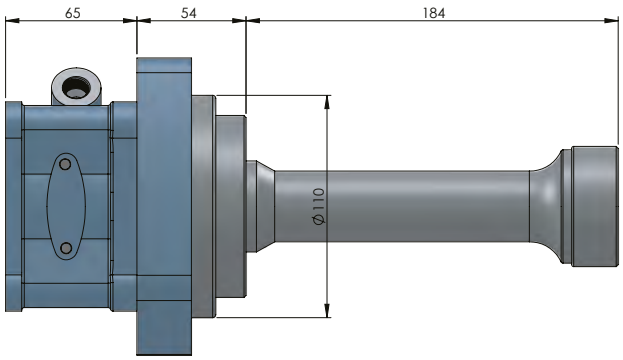




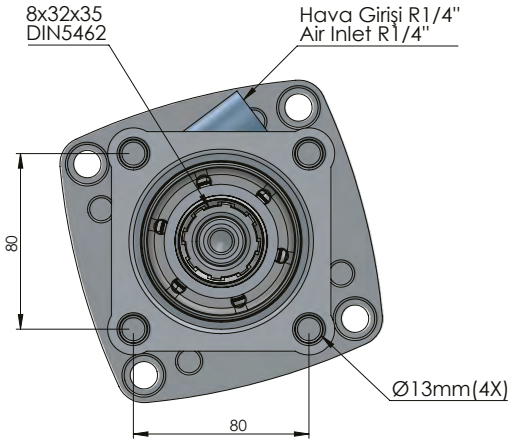


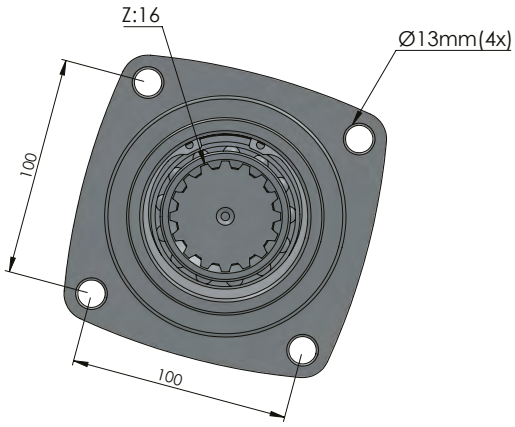


| CODE<br>KOD | TYPE<br>TİP (A) | MOUNTING TYPE<br>BAĞLANTI TİPİ (B) | MOUNTING SIDE<br>BAĞLANTI | TORQUE<br>TORK<br>(Kgm / Nm) | POWER<br>GÜÇ<br>(Hp / Kw) | SPEED<br>DEVİR<br>(RPM) | RATIO<br>ORAN |
|---|---|---|---|---|---|---|---|
| 51310412P0 | PNEUMATIC<br>PNÖMATİK | UNI ADAPTER<br>ADAPTÖRLÜ UNI | REAR<br>KUYRUK | 48,9 Kgm<br>479,5 Nm | 34,5 Hp<br>25,7 Kw | 513 RPM | 1:1 |
| 51310422P0 | | ISO | | | | | |
| 51310432P0 | | FLANGE<br>ADAPTÖRLÜ FLANŞLI | | | | | |
| 51310442P0 | | SHAFT<br>ADAPTÖRLÜ ŞAFTLI | | | | | |

| GEARBOX / ANA ŞANZIMANLAR | USED VEHICLES / KULLANILAN BAZI ARAÇLAR |
|---|---|
| LIAZ | LIAZ |

Seçeceğiniz pompanın dönüş yönü, P.T.O. dönüş yönü ile ters olmalıdır.
The rotation of the choosen pump has to be opposite with the rotation of P.T.O.

P.T.O. montaj edildikten sonra ana şanzıman yağını tamamlayın.
Fill the oil of the gear box after mounting the P.T.O.

# LIAZ 2 DOUBLE GEAR ISO

## LIAZ 2 AKTARMALI ISO



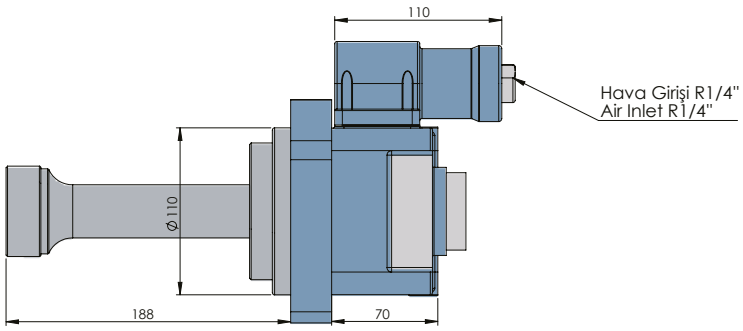


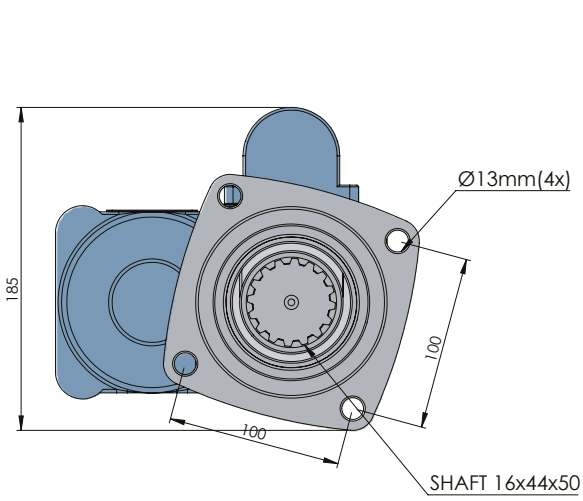


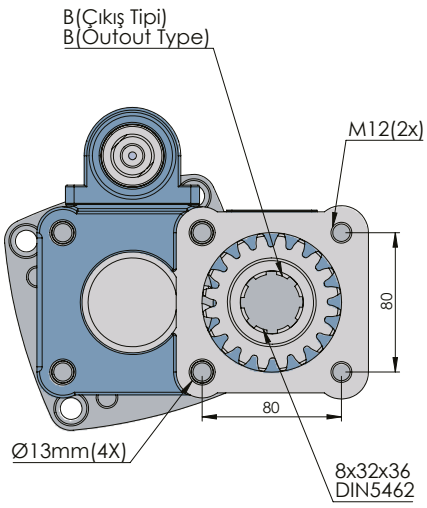


| CODE<br>KOD | TYPE<br>TİP (A) | MOUNTING TYPE<br>BAĞLANTI TİPİ (B) | MOUNTING SIDE<br>BAĞLANTI | TORQUE<br>TORK<br>(Kgm / Nm) | POWER<br>GÜÇ<br>(Hp / Kw) | SPEED<br>DEVİR<br>(RPM) | RATIO<br>ORAN |
|---|---|---|---|---|---|---|---|
| 51311411P0 | PNEUMATIC<br>PNÖMATİK | UNI ADAPTER<br>ADAPTÖRLÜ UNI | REAR<br>KUYRUK | 26,5 Kgm<br>260 Nm | 24,5 Hp<br>18,3 Kw | 675 RPM | 1:1,2 |
| 51311421P0 | | ISO | | | | | |
| 51311431P0 | | FLANGE<br>ADAPTÖRLÜ FLANŞLI | | | | | |
| 51311441P0 | | SHAFT<br>ADAPTÖRLÜ ŞAFTLI | | | | | |

| GEARBOX / ANA ŞANZIMANLAR | USED VEHICLES / KULLANILAN BAZI ARAÇLAR |
|---|---|
| LIAZ | LIAZ |



Seçeceğiniz pompanın dönüş yönü, P.T.O. dönüş yönü ile ters olmalıdır.
The rotation of the choosen pump has to be opposite to the rotation of P.T.O.

P.T.O. montaj edildikten sonra ana şanzıman yağını tamamlayın.
Fill the oil of the gear box after mounting the P.T.O.

# IVECO 2840 SIDE UNI

## IVECO 2840 YAN UNI

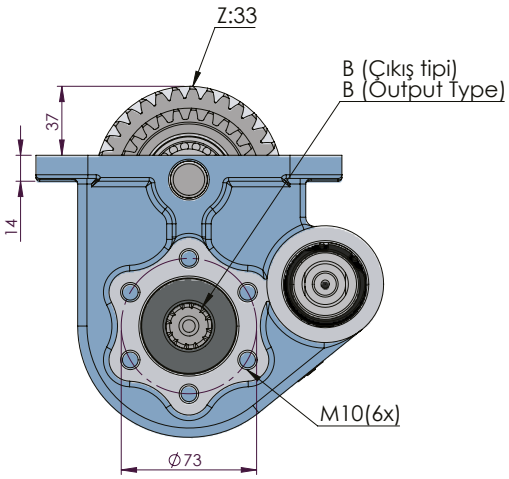




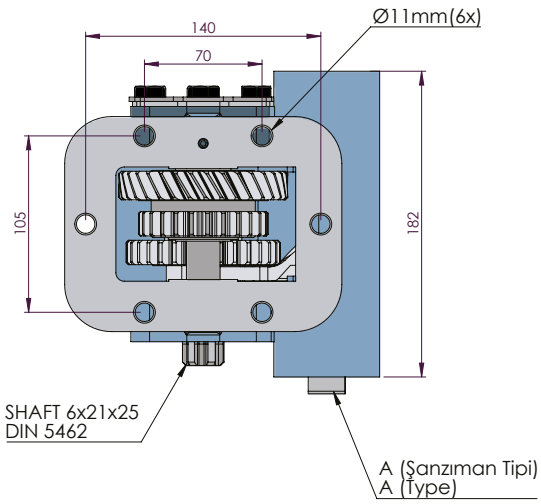


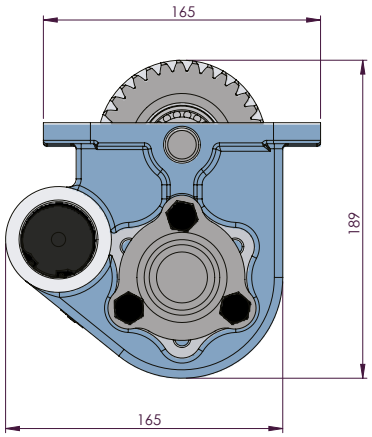


| CODE<br>KOD | TYPE<br>TİP (A) | MOUNTING TYPE<br>BAĞLANTI TİPİ (B) | MOUNTING SIDE<br>BAĞLANTI | TORQUE<br>TORK<br>(Kgm / Nm) | POWER<br>GÜÇ<br>(Hp / Kw) | SPEED<br>DEVİR<br>(RPM) | RATIO<br>ORAN |
|---|---|---|---|---|---|---|---|
| 50810512M0 | MECHANIC<br>MEKANİK | UNI | SIDE<br>YAN | 23 Kgm<br>225 Nm | 31,6 Hp<br>23,6 Kw | 1000 RPM | 1:1,24 |
| 50810522M0 | | ISO ADAPTER<br>ADAPTÖRLÜ ISO | | | | | |
| 50810532M0 | | FLANGE<br>FLANŞLI | | | | | |
| 50810542M0 | | SHAFT<br>ŞAFTLI | | | | | |
| 50810512V0 | VACUUM<br>VAKUMLU | UNI | | | | | |
| 50810522V0 | | ISO ADAPTER<br>ADAPTÖRLÜ ISO | | | | | |
| 50810532V0 | | FLANGE<br>FLANŞLI | | | | | |
| 50810542V0 | | SHAFT<br>ŞAFTLI | | | | | |

| GEARBOX / ANA ŞANZIMANLAR | USED VEHICLES / KULLANILAN BAZI ARAÇLAR |
|---|---|
| FPT 2840.6 FL2011 - MY2011 / 2840.6 (5,37) ( 8873022 - 8873021 - 8873387 EURO 5 ) FPT 2840.6 FL2011 - MY2011 / 2840.6 (5,37) ( 6872643)700 RPM, SAĞ) | IVECO 45C15 -DAILY 4X4 - 50C18 - 35C15 - 50C15 - IVECO 65C15 - 70C15 IVECO DAILY 4X4 55S18 / NISSAN ATLEON 56.15 / NISSAN CABSTAR 45.13 / RENAULT MAXITY - FT 50.6H |

Seçeceğiniz pompanın dönüş yönü, P.T.O. dönüş yönü ile ters olmalıdır.
The rotation of the choosen pump has to be opposite with the rotation of P.T.O.

P.T.O. montaj edildikten sonra ana şanzıman yağını tamamlayın.
Fill the oil of the gear box after mounting the P.T.O.

# IVECO 2855 SIDE UNI

## IVECO 2855 YAN UNI



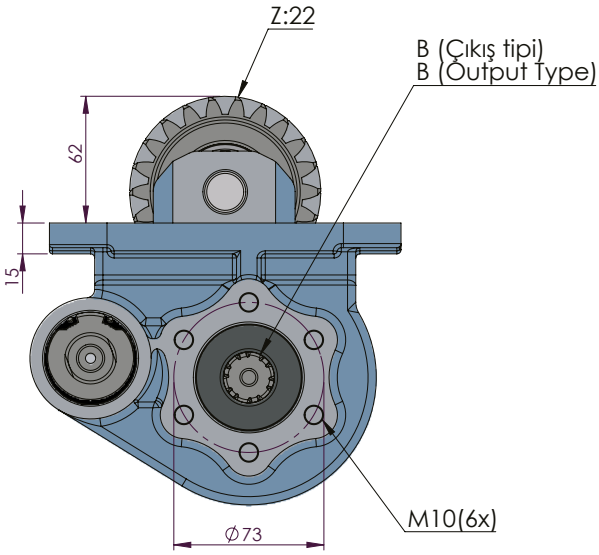


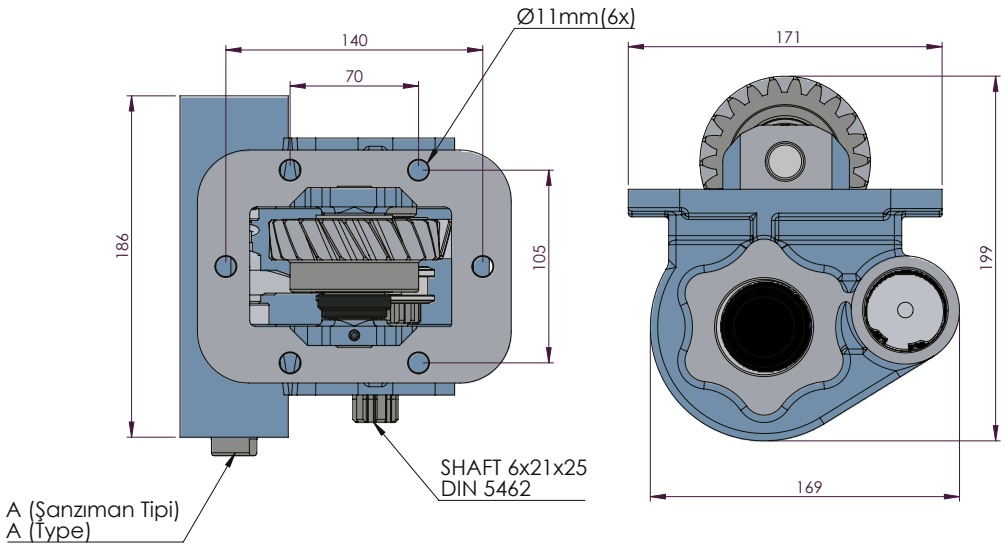


| CODE<br>KOD | TYPE<br>TİP (A) | MOUNTING TYPE<br>BAĞLANTI TİPİ (B) | MOUNTING SIDE<br>BAĞLANTI | TORQUE<br>TORK<br>(Kgm / Nm) | POWER<br>GÜÇ<br>(Hp / Kw) | SPEED<br>DEVİR<br>(RPM) | RATIO<br>ORAN |
|---|---|---|---|---|---|---|---|
| 50812512M0 | MECHANIC<br>MEKANİK | UNI | SIDE<br>YAN | 24,4 Kgm<br>240 Nm | 32 Hp<br>23,3 Kw | 1000 RPM | 1:0,88 |
| 50812522M0 | | ISO ADAPTER<br>ADAPTÖRLÜ ISO | | | | | |
| 50812532M0 | | FLANGE<br>FLANŞLI | | | | | |
| 50812542M0 | | SHAFT<br>ŞAFTLI | | | | | |

| GEARBOX / ANA ŞANZIMANLAR | USED VEHICLES / KULLANILAN BAZI ARAÇLAR |
|---|---|
| 2846.5-2842-2835-2830-2646 (500 RPM, SOL) | FIAT IVECO / 65.15-79.13-79.14-80.14 IVECO / 65.12-79.12-95.14-100.13-109.14-135.14<br>ZETA IVECO 79.13-79.14-65.15-100.13-100.16-135.14 IVECO |



Seçeceğiniz pompanın dönüş yönü, P.T.O. dönüş yönü ile ters olmalıdır.
The rotation of the choosen pump has to be opposite to the rotation of P.T.O.

P.T.O. montaj edildikten sonra ana şanzıman yağını tamamlayın.
Fill the oil of the gear box after mounting the P.T.O.

# IVECO 2855 DOUBLE GEAR UNI

## IVECO 2855 AKTARMALI UNI

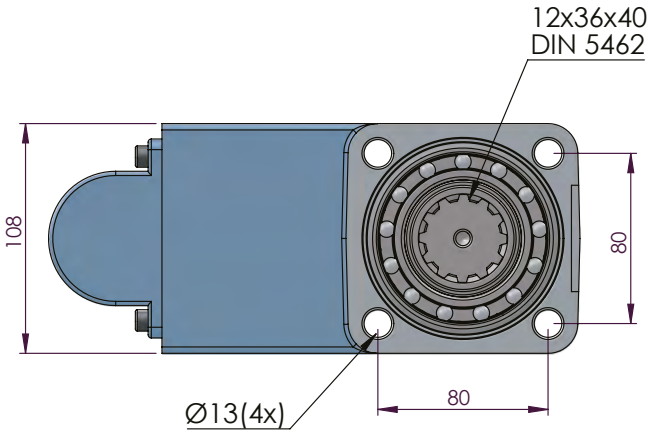




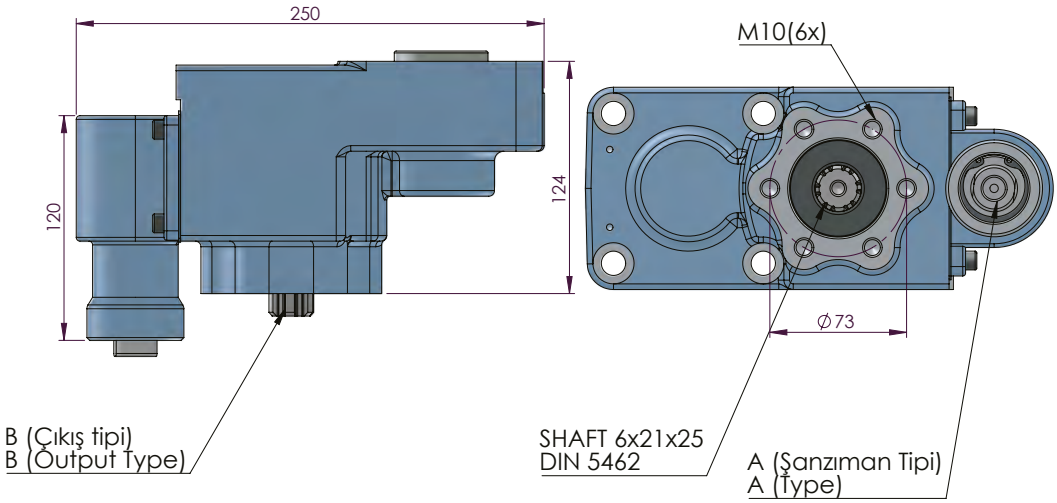


| CODE<br>KOD | TYPE<br>TİP (A) | MOUNTING TYPE<br>BAĞLANTI TİPİ (B) | MOUNTING SIDE<br>BAĞLANTI | TORQUE<br>TORK<br>(Kgm / Nm) | POWER<br>GÜÇ<br>(Hp / Kw) | SPEED<br>DEVİR<br>(RPM) | RATIO<br>ORAN |
|---|---|---|---|---|---|---|---|
| 50812311P0 | PNEUMATIC<br>PNÖMATİK | UNI | REAR<br>KUYRUK | 18,3 Kgm<br>179,5 Nm | 16,8 Hp<br>12,5 Kw | 650 RPM | 1:1,12 |
| 50812321P0 | | ISO ADAPTER<br>ADAPTÖRLÜ ISO | | | | | |
| 50812331P0 | | FLANGE<br>FLANŞLI | | | | | |
| 50812341P0 | | SHAFT<br>ŞAFTLI | | | | | |

| GEARBOX / ANA ŞANZIMANLAR | USED VEHICLES / KULLANILAN BAZI ARAÇLAR |
|---|---|
| 2845.6-2855.6 IVECO (1000 RPM, SAĞ) | IVECO 60.10-60.12-75.14-80.14-80.12-85.12-85.14-120.14-140.14-150.14-130E15-80.15-100.15 -120.15-150E21-220E21-60.14-65E12-65E14-75.12-75E14-75E15-80E15-80E18-85E13-85E15-100E15-100E18-130E15-130E18 -79.12-75E17 - 75E18 / 120 EL 15 / 75E14 / 75E15 |

Seçeceğiniz pompanın dönüş yönü, P.T.O. dönüş yönü ile ters olmalıdır.
The rotation of the choosen pump has to be opposite with the rotation of P.T.O.

P.T.O. montaj edildikten sonra ana şanzıman yağını tamamlayın.
Fill the oil of the gear box after mounting the P.T.O.

# IVECO 2846 DOUBLE GEAR UNI

## IVECO 2846 AKTARMALI UNI



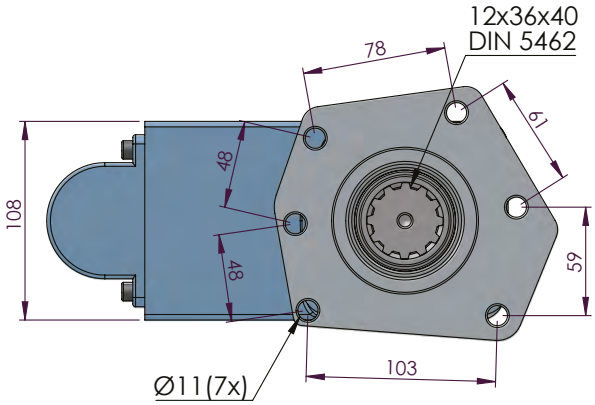


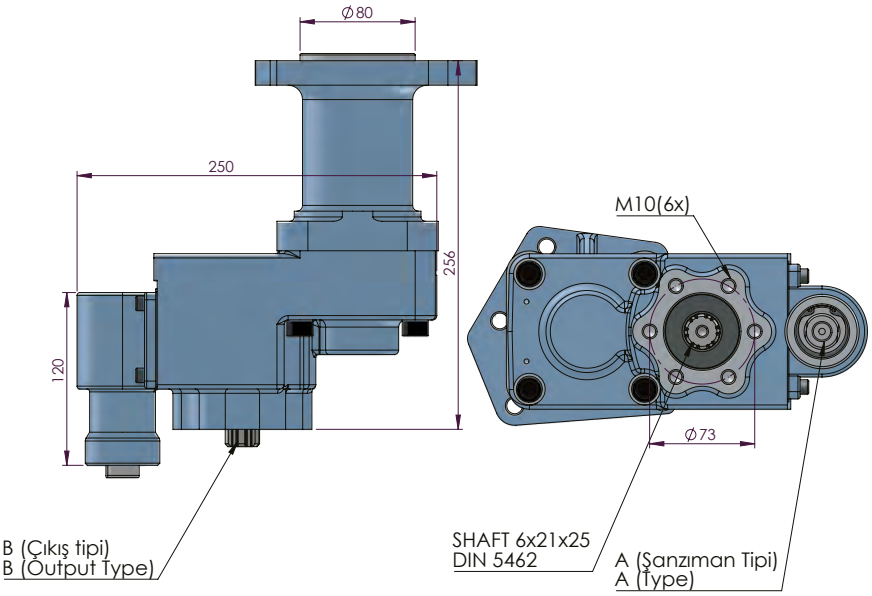


| CODE<br>KOD | TYPE<br>TİP (A) | MOUNTING TYPE<br>BAĞLANTI TİPİ (B) | MOUNTING SIDE<br>BAĞLANTI | TORQUE<br>TORK<br>(Kgm / Nm) | POWER<br>GÜÇ<br>(Hp / Kw) | SPEED<br>DEVİR<br>(RPM) | RATIO<br>ORAN |
|---|---|---|---|---|---|---|---|
| 50811311P0 | PNEUMATIC<br>PNÖMATİK | UNI | REAR<br>KUYRUK | 18,3 Kgm<br>179,5 Nm | 16,8 Hp<br>12,5 Kw | 500 RPM | 1:1,12 |
| 50811321P0 | | ISO ADAPTER<br>ADAPTÖRLÜ ISO | | | | | |
| 50811331P0 | | FLANGE<br>FLANŞLI | | | | | |
| 50811341P0 | | SHAFT<br>ŞAFTLI | | | | | |

| GEARBOX / ANA ŞANZIMANLAR | USED VEHICLES / KULLANILAN BAZI ARAÇLAR |
|---|---|
| 2846.5-2842-2835-2830-2646 (500 RPM, SOL) | FIAT IVECO / 65.15-79.13-79.14-80.14 IVECO / 65.12-79.12-95.14-100.13-109.14-135.14<br>ZETA IVECO 79.13-79.14-65.15-100.13-100.16-135.14 IVECO |



Seçeceğiniz pompanın dönüş yönü, P.T.O. dönüş yönü ile ters olmalıdır.
The rotation of the choosen pump has to be opposite to the rotation of P.T.O.

P.T.O. montaj edildikten sonra ana şanzıman yağını tamamlayın.
Fill the oil of the gear box after mounting the P.T.O.

# IVECO 2865 DOUBLE GEAR UNI

## IVECO 2865 AKTARMALI UNI

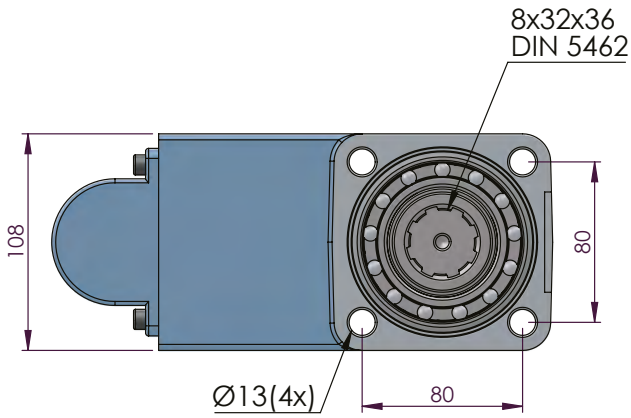




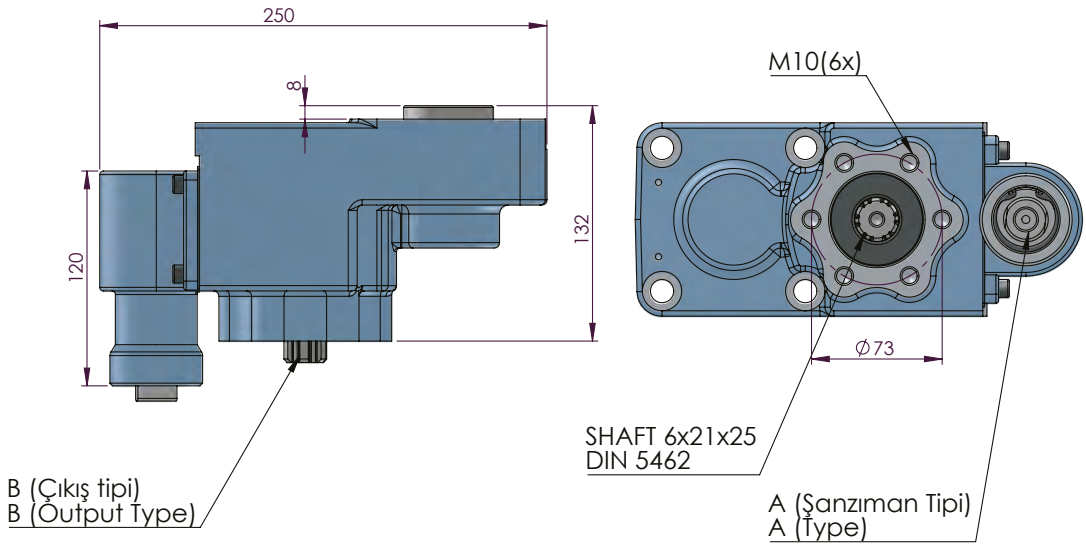


| CODE<br>KOD | TYPE<br>TİP (A) | MOUNTING TYPE<br>BAĞLANTI TİPİ (B) | MOUNTING SIDE<br>BAĞLANTI | TORQUE<br>TORK<br>(Kgm / Nm) | POWER<br>GÜÇ<br>(Hp / Kw) | SPEED<br>DEVİR<br>(RPM) | RATIO<br>ORAN |
|---|---|---|---|---|---|---|---|
| 50813311P0 | PNEUMATIC<br>PNÖMATİK | UNI | REAR<br>KUYRUK | 18,3 Kgm<br>179,5 Nm | 16,8 Hp<br>12,5 Kw | 650 RPM | 1:1,12 |
| 50813321P0 | | ISO ADAPTER<br>ADAPTÖRLÜ ISO | | | | | |
| 50813331P0 | | FLANGE<br>FLANŞLI | | | | | |
| 50813341P0 | | SHAFT<br>ŞAFTLI | | | | | |

| GEARBOX / ANA ŞANZIMANLAR | USED VEHICLES / KULLANILAN BAZI ARAÇLAR |
|---|---|
| 2865.6 (650 RPM, SOL) | JOHNSTON 12E18 IVECO EUROCARGO / 100E21-120E18-120E23-130E23-180E18-260E18-,<br>80.21-100.18-120.23-130.23-150.18-150.23-170.18-170.23-150E21-220E21<br>EUROCARGO IVECO |

Seçeceğiniz pompanın dönüş yönü, P.T.O. dönüş yönü ile ters olmalıdır.
The rotation of the choosen pump has to be opposite with the rotation of P.T.O.

P.T.O. montaj edildikten sonra ana şanzıman yağını tamamlayın.
Fill the oil of the gear box after mounting the P.T.O.

# IVECO 2870 DOUBLE GEAR UNI

## IVECO 2870 AKTARMALI UNI



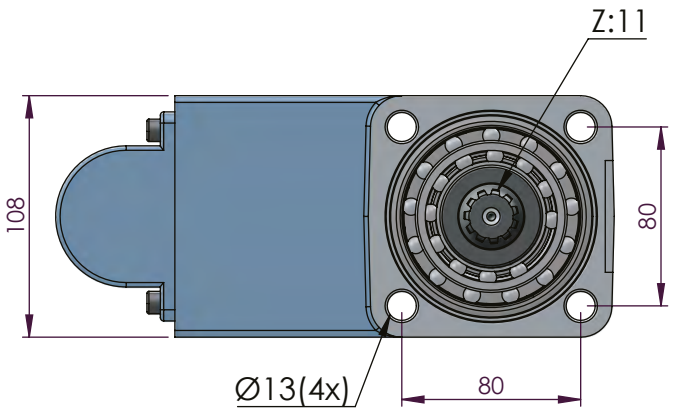


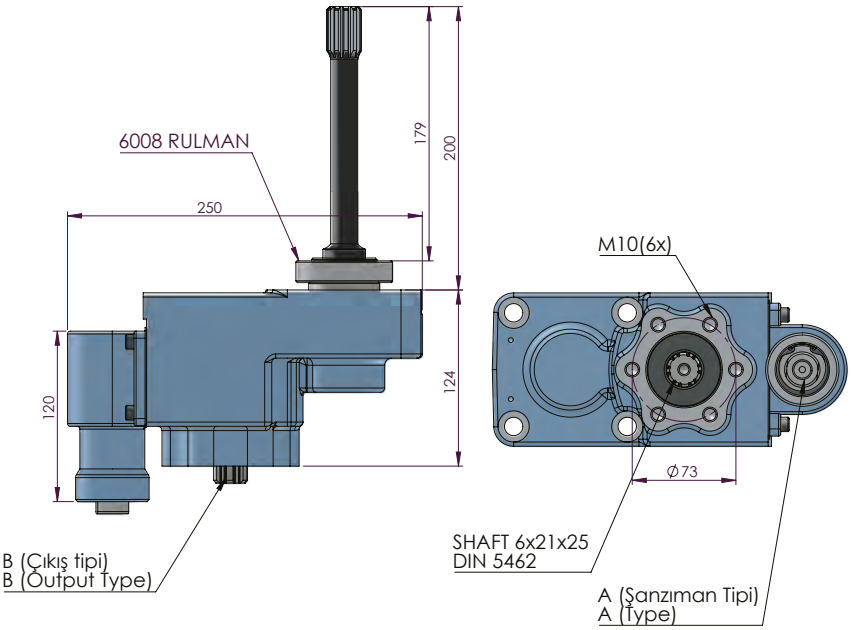


| CODE<br>KOD | TYPE<br>TİP (A) | MOUNTING TYPE<br>BAĞLANTI TİPİ (B) | MOUNTING SIDE<br>BAĞLANTI | TORQUE<br>TORK<br>(Kgm / Nm) | POWER<br>GÜÇ<br>(Hp / Kw) | SPEED<br>DEVİR<br>(RPM) | RATIO<br>ORAN |
|---|---|---|---|---|---|---|---|
| 50814311P0 | PNEUMATIC<br>PNÖMATİK | UNI | REAR<br>KUYRUK | 22,4 Kgm<br>219,7 Nm | 20,8 Hp<br>15,5 Kw | 675 RPM | 1:1,12 |
| 50814321P0 | | ISO ADAPTER<br>ADAPTÖRLÜ ISO | | | | | |
| 50814331P0 | | FLANGE<br>FLANŞLI | | | | | |
| 50814341P0 | | SHAFT<br>ŞAFTLI | | | | | |

| GEARBOX / ANA ŞANZIMANLAR | USED VEHICLES / KULLANILAN BAZI ARAÇLAR |
|---|---|
| 2870.9 (675 RPM, SOL) | 120E18-120E23-130E15-130E18-130E23-150E15-150E18-150E23-170E18-170E23-180E21-250E21<br>-100E18-100E23-100E15-130E15-130E18 EUROCARGO IVECO / 250 E24-230 E18-180 E28-<br>250 E23 EUROCARGO IVECO |

Seçeceğiniz pompanın dönüş yönü, P.T.O. dönüş yönü ile ters olmalıdır.
The rotation of the choosen pump has to be opposite to the rotation of P.T.O.

P.T.O. montaj edildikten sonra ana şanzıman yağını tamamlayın.
Fill the oil of the gear box after mounting the P.T.O.

# IVECO 2895 DOUBLE GEAR UNI

## IVECO 2895 AKTARMALI UNI

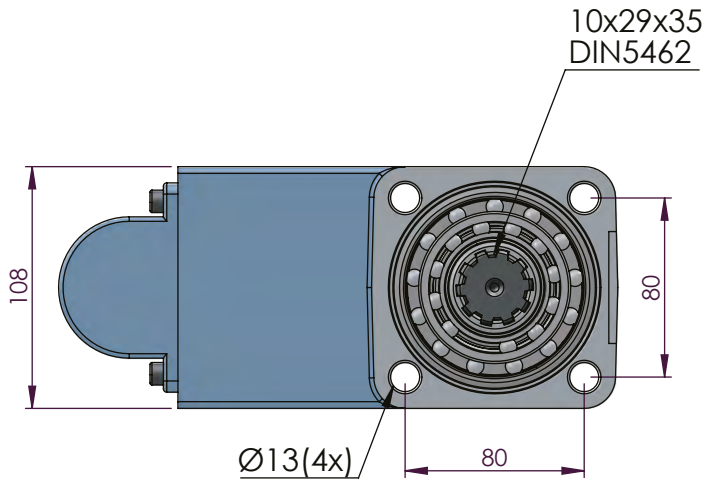




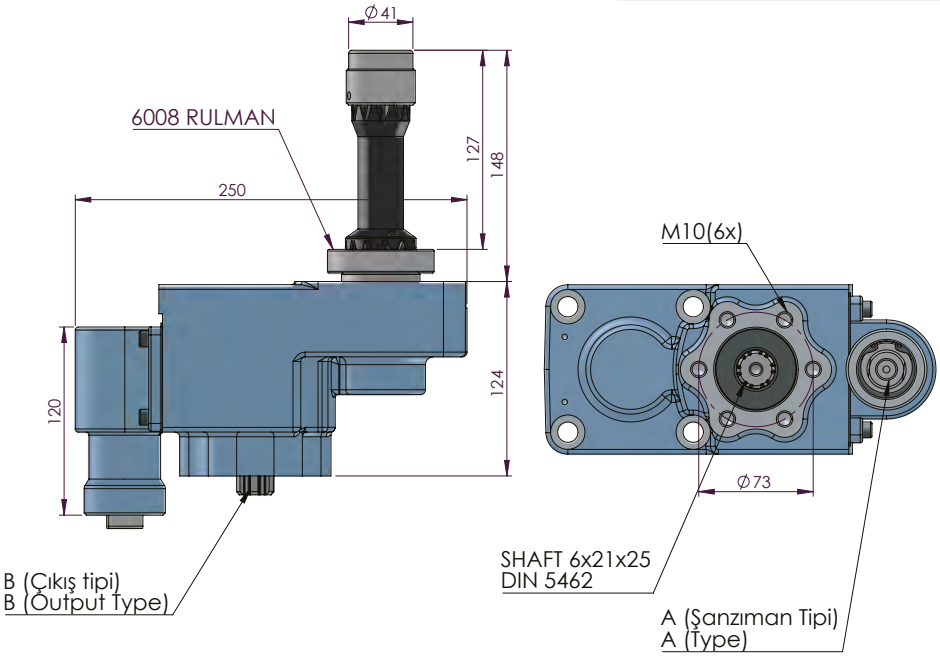


| CODE<br>KOD | TYPE<br>TİP (A) | MOUNTING TYPE<br>BAĞLANTI TİPİ (B) | MOUNTING SIDE<br>BAĞLANTI | TORQUE<br>TORK<br>(Kgm / Nm) | POWER<br>GÜÇ<br>(Hp / Kw) | SPEED<br>DEVİR<br>(RPM) | RATIO<br>ORAN |
|---|---|---|---|---|---|---|---|
| 50815311P0 | PNEUMATIC<br>PNÖMATİK | UNI | REAR<br>KUYRUK | 22,4 Kgm<br>219,7 Nm | 20,8 Hp<br>15,5 Kw | 675 RPM | 1:1,12 |
| 50815321P0 | | ISO ADAPTER<br>ADAPTÖRLÜ ISO | | | | | |
| 50815331P0 | | FLANGE<br>FLANŞLI | | | | | |
| 50815341P0 | | SHAFT<br>ŞAFTLI | | | | | |

| GEARBOX / ANA ŞANZIMANLAR | USED VEHICLES / KULLANILAN BAZI ARAÇLAR |
|---|---|
| 2895.9 (675 RPM, SOL) | 120E18-120E23-130E15-130E18-130E23-150E15-150E18-150E23-170E18-170E23-180E21-250E21<br>-100E18-100E23-100E15-130E15-130E18-250E24-180E28-150E25-190EL25-160E24-180E24-150.17<br>-175.24-175.27-179.24 / ML160E24-190EL28 / 180E28 EUROCARGO IVECO / IVECO MLL180E28 |

Seçeceğiniz pompanın dönüş yönü, P.T.O. dönüş yönü ile ters olmalıdır.
The rotation of the choosen pump has to be opposite with the rotation of P.T.O.

P.T.O. montaj edildikten sonra ana şanzıman yağını tamamlayın.
Fill the oil of the gear box after mounting the P.T.O.

# IVECO 475 SMLX



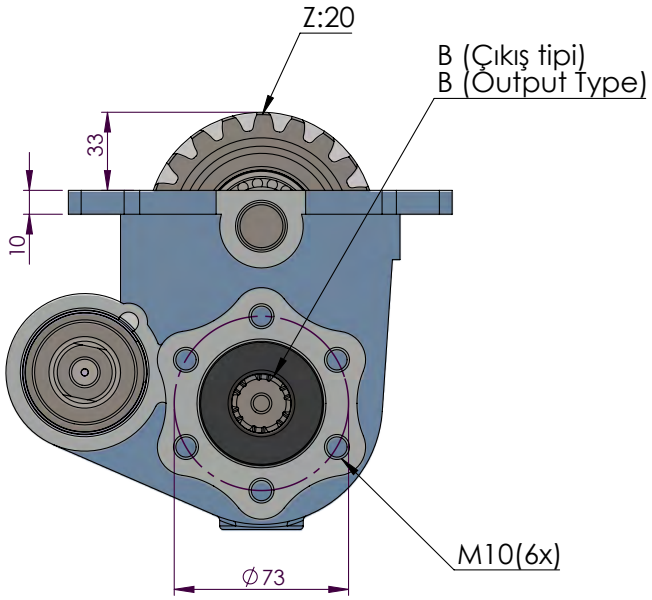


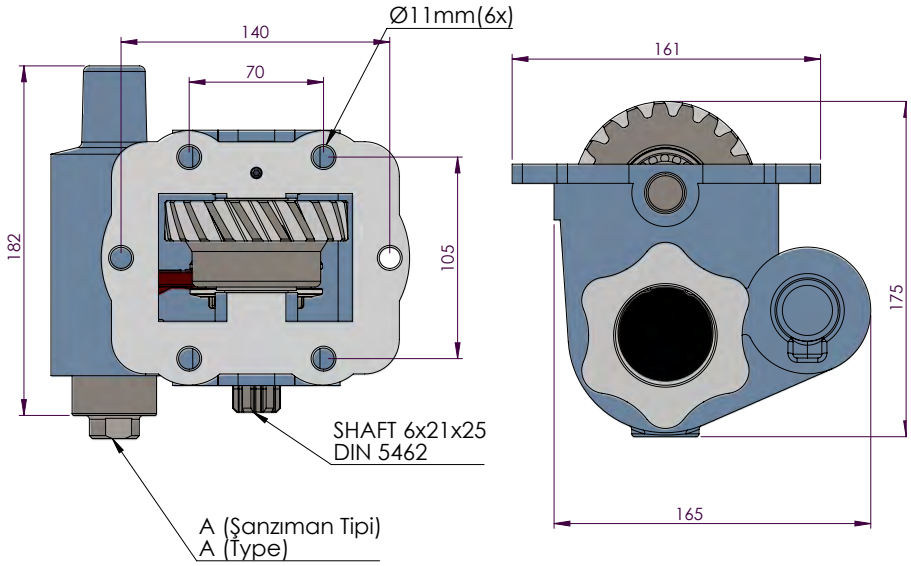


| CODE<br>KOD | TYPE<br>TİP (A) | MOUNTING TYPE<br>BAĞLANTI TİPİ (B) | MOUNTING SIDE<br>BAĞLANTI | TORQUE<br>TORK<br>(Kgm / Nm) | POWER<br>GÜÇ<br>(Hp / Kw) | SPEED<br>DEVİR<br>(RPM) | RATIO<br>ORAN |
|---|---|---|---|---|---|---|---|
| 50817512M0 | MECHANIC<br>MEKANİK | UNI | SIDE<br>YAN | 25,4 Kgm<br>248 Nm | 32,9 Hp<br>21,2 Kw | 1000 RPM | 1:1,43 |
| 50817522M0 | | ISO ADAPTER<br>ADAPTÖRLÜ ISO | | | | | |
| 50817532M0 | | FLANGE<br>FLANŞLI | | | | | |
| 50817542M0 | | SHAFT<br>ŞAFTLI | | | | | |
| 50817512P0 | PNEUMATIC<br>PNÖMATİK | UNI | | | | | |
| 50817522P0 | | ISO ADAPTER<br>ADAPTÖRLÜ ISO | | | | | |
| 50817532P0 | | FLANGE<br>FLANŞLI | | | | | |
| 50817542P0 | | SHAFT<br>ŞAFTLI | | | | | |

| GEARBOX / ANA ŞANZIMANLAR | USED VEHICLES / KULLANILAN BAZI ARAÇLAR |
|---|---|
| EATON-HEMA 475 R SMLX-5 (1000 RPM, SAĞ) | 75.12 IVECO-85.12 IVECO |



Seçeceğiniz pompanın dönüş yönü, P.T.O. dönüş yönü ile ters olmalıdır.
The rotation of the choosen pump has to be opposite to the rotation of P.T.O.

P.T.O. montaj edildikten sonra ana şanzıman yağını tamamlayın.
Fill the oil of the gear box after mounting the P.T.O.

# IVECO 2828

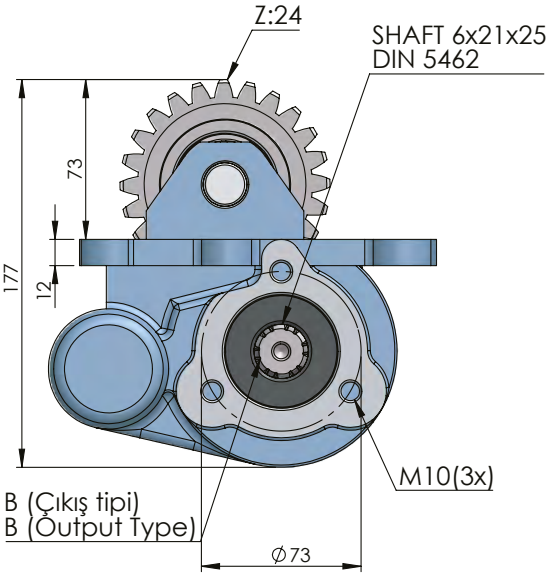




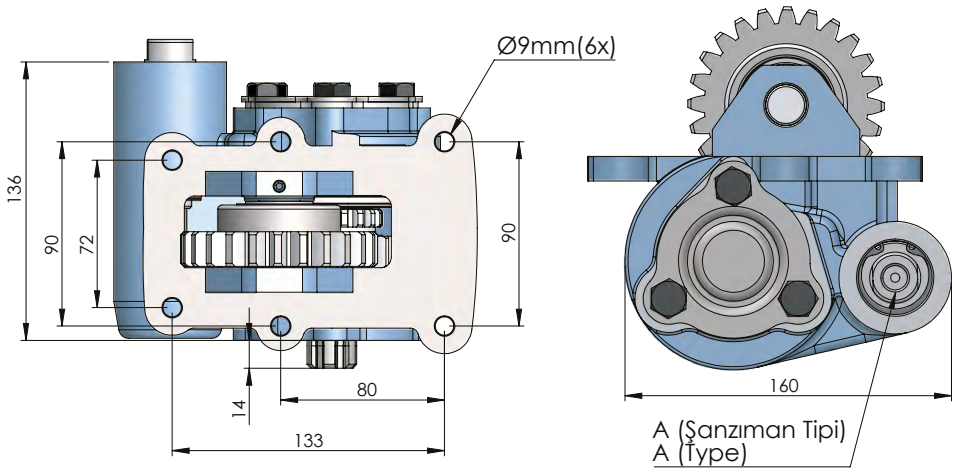


| CODE<br>KOD | TYPE<br>TİP (A) | MOUNTING TYPE<br>BAĞLANTI TİPİ (B) | MOUNTING SIDE<br>BAĞLANTI | TORQUE<br>TORK<br>(Kgm / Nm) | POWER<br>GÜÇ<br>(Hp / Kw) | SPEED<br>DEVİR<br>(RPM) | RATIO<br>ORAN |
|---|---|---|---|---|---|---|---|
| 50816512M0 | MECHANIC<br>MEKANİK | UNI | SIDE<br>YAN | 15 Kgm<br>147 Nm | 6,2 Hp<br>4,6 Kw | 300 RPM | 1:1,26 |
| 50816522M0 | | ISO ADAPTER<br>ADAPTÖRLÜ ISO | | | | | |
| 50816532M0 | | FLANGE<br>FLANŞLI | | | | | |
| 50816542M0 | | SHAFT<br>ŞAFTLI | | | | | |
| 50816512P0 | PNEUMATIC<br>PNÖMATİK | UNI | | | | | |
| 50816522P0 | | ISO ADAPTER<br>ADAPTÖRLÜ ISO | | | | | |
| 5081653P0 | | FLANGE<br>FLANŞLI | | | | | |
| 50816542P0 | | SHAFT<br>ŞAFTLI | | | | | |
| 50816512V0 | VACUUM<br>VAKUMLU | UNI | | | | | |
| 50816522V0 | | ISO ADAPTER<br>ADAPTÖRLÜ ISO | | | | | |
| 50816532V0 | | FLANGE<br>FLANŞLI | | | | | |
| 50816542V0 | | SHAFT<br>ŞAFTLI | | | | | |

| GEARBOX / ANA ŞANZIMANLAR | USED VEHICLES / KULLANILAN BAZI ARAÇLAR |
|---|---|
| 2828.5-2831.5 (300 RPM, SAĞ) | 35.9 - 65.9 - 35 NC - 50 NC - 50.9 - 50.11 IVECO - 60.9 |

Seçeceğiniz pompanın dönüş yönü, P.T.O. dönüş yönü ile ters olmalıdır.
The rotation of the choosen pump has to be opposite with the rotation of P.T.O.

P.T.O. montaj edildikten sonra ana şanzıman yağını tamamlayın.
Fill the oil of the gear box after mounting the P.T.O.

# KAMAZ



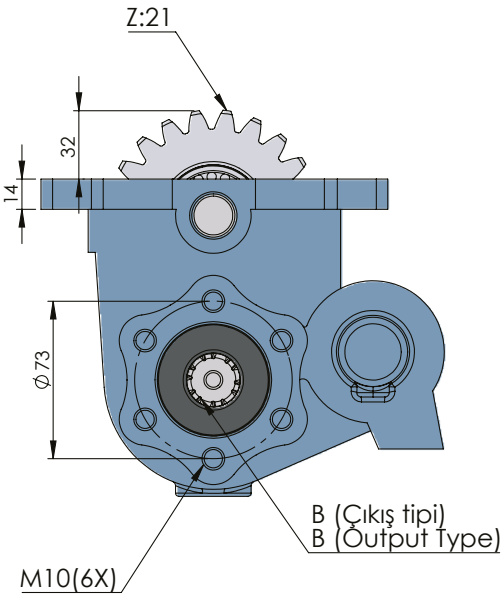


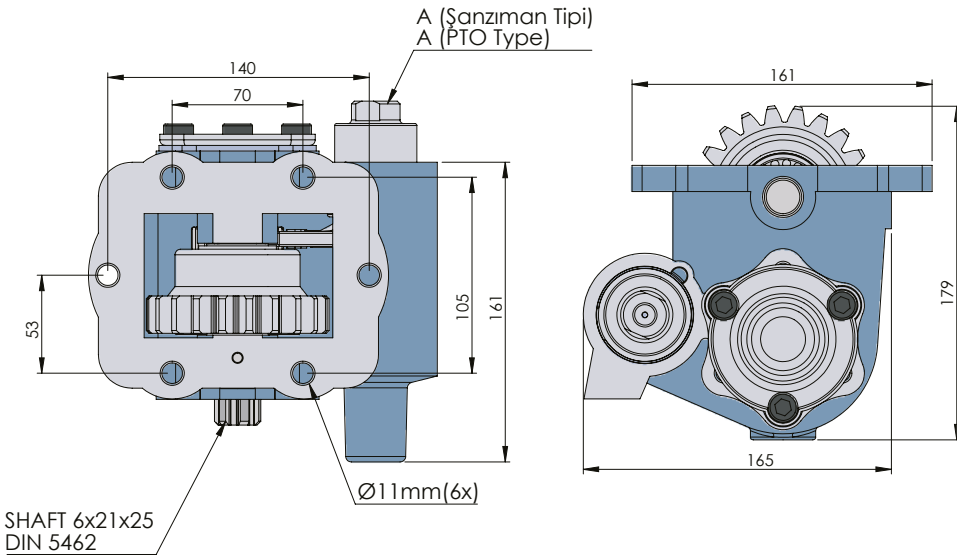


| CODE<br>KOD | TYPE<br>TİP (A) | MOUNTING TYPE<br>BAĞLANTI TİPİ (B) | MOUNTING SIDE<br>BAĞLANTI | TORQUE<br>TORK<br>(Kgm / Nm) | POWER<br>GÜÇ<br>(Hp / Kw) | SPEED<br>DEVİR<br>(RPM) | RATIO<br>ORAN |
|---|---|---|---|---|---|---|---|
| 52011511P0 | PNEUMATIC<br>PNÖMATİK | UNI | SIDE<br>YAN | 26 Kgm<br>260 Nm | 36.5 Hp<br>27,2 Kw | 1000 RPM | 1:1,5 |
| 52011521P0 | | ISO ADAPTER<br>ADAPTÖRLÜ ISO | | | | | |
| 52011531P0 | | FLANGE<br>FLANŞLI | | | | | |
| 52011541P0 | | SHAFT<br>ŞAFTLI | | | | | |

| GEARBOX / ANA ŞANZIMANLAR | USED VEHICLES / KULLANILAN BAZI ARAÇLAR |
|---|---|
| 33104 -33106 -1700010/6x4 TURBO 55111 KAMAZ (USSR) - REO - 51301010 KAMAZ 43118 KAMAZ 14 , KAMAZ 15-053 No: 947789 , KAMAZ 15-050 No:866292 | JACK-KAMAZ- KAMAZ-154 / 154-053 / 154-050 6x4 TURBO 55111 KAMAZ (USSR) - REO |



Seçeceğiniz pompanın dönüş yönü, P.T.O. dönüş yönü ile ters olmalıdır.
The rotation of the choosen pump has to be opposite to the rotation of P.T.O.

P.T.O. montaj edildikten sonra ana şanzıman yağını tamamlayın.
Fill the oil of the gear box after mounting the P.T.O.

# JAC LC6T55

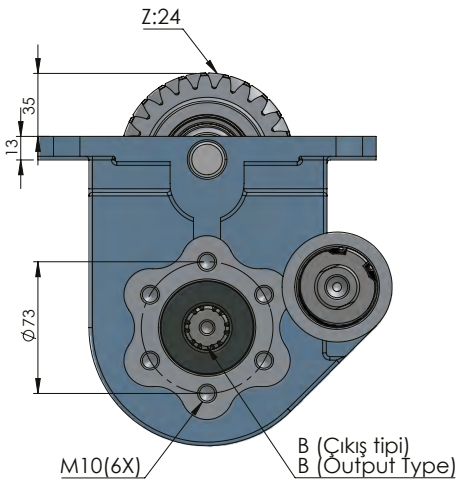




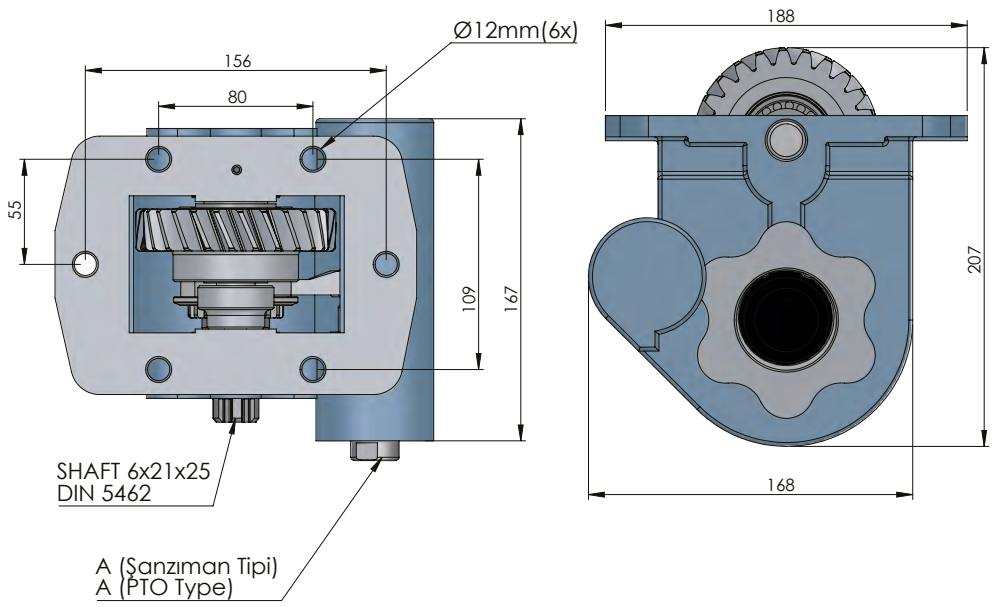


| CODE<br>KOD | TYPE<br>TİP (A) | MOUNTING TYPE<br>BAĞLANTI TİPİ (B) | MOUNTING SIDE<br>BAĞLANTI | TORQUE<br>TORK<br>(Kgm / Nm) | POWER<br>GÜÇ<br>(Hp / Kw) | SPEED<br>DEVİR<br>(RPM) | RATIO<br>ORAN |
|---|---|---|---|---|---|---|---|
| 52110512P0 | PNEUMATIC<br>PNÖMATİK | UNI | SIDE<br>YAN | 22 Kgm<br>220 Nm | 30 Hp<br>23 Kw | 1000 RPM | 1.0,9 |
| 52110522P0 | | ISO ADAPTER<br>ADAPTÖRLÜ ISO | | | | | |
| 52110532P0 | | FLANGE<br>FLANŞLI | | | | | |
| 52110542P0 | | SHAFT<br>ŞAFTLI | | | | | |

| GEARBOX / ANA ŞANZIMANLAR | USED VEHICLES / KULLANILAN BAZI ARAÇLAR |
|---|---|
| LC6T55 | JAC 3,8 |

Seçeceğiniz pompanın dönüş yönü, P.T.O. dönüş yönü ile ters olmalıdır.
The rotation of the choosen pump has to be opposite with the rotation of P.T.O.

P.T.O. montaj edildikten sonra ana şanzıman yağını tamamlayın.
Fill the oil of the gear box after mounting the P.T.O.

# VOLVO R5-SR52 SINGLE GEAR ISO

## VOLVO R5-SR52 TEK DİŞLİ ISO



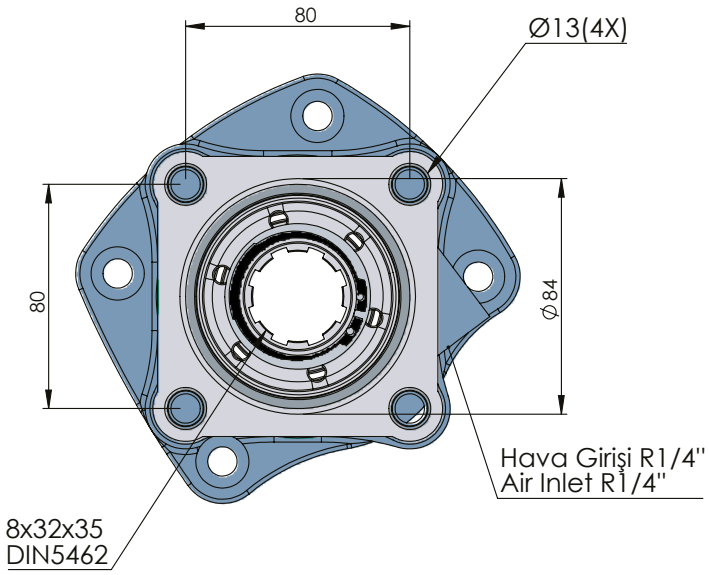


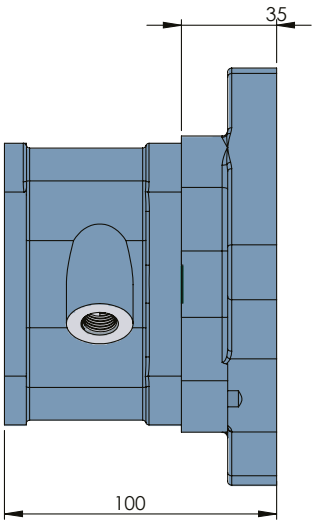


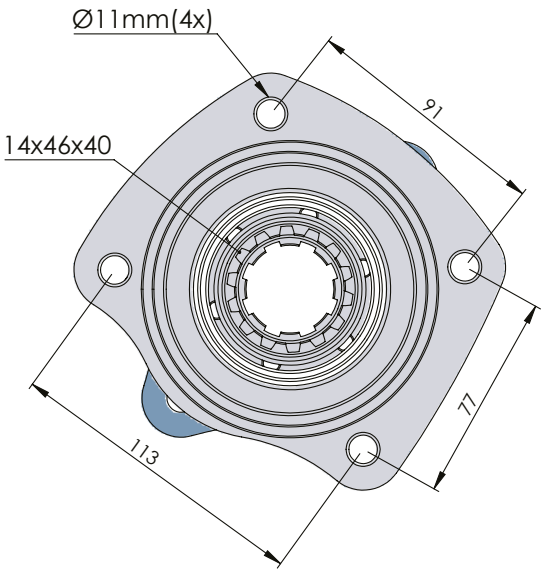


| CODE<br>KOD | TYPE<br>TİP (A) | MOUNTING TYPE<br>BAĞLANTI TİPİ (B) | MOUNTING SIDE<br>BAĞLANTI | TORQUE<br>TORK<br>(Kgm / Nm) | POWER<br>GÜÇ<br>(Hp / Kw) | SPEED<br>DEVİR<br>(RPM) | RATIO<br>ORAN |
|---|---|---|---|---|---|---|---|
| 50910312P0 | PNEUMATIC<br>PNÖMATİK | UNI ADAPTER<br>ADAPTÖRLÜ UNI | REAR<br>KUYRUK | 25 Kgm<br>245 Nm | 26,5 Hp<br>19,8 Kw | 780 RPM | 1:1,2 |
| 50910322P0 | | ISO | | | | | |
| 50910332P0 | | FLANGE<br>ADAPTÖRLÜ FLANŞLI | | | | | |
| 50910342P0 | | SHAFT<br>ADAPTÖRLÜ ŞAFTLI | | | | | |

| GEARBOX / ANA ŞANZIMANLAR | USED VEHICLES / KULLANILAN BAZI ARAÇLAR |
|---|---|
| R 51-R / SR 52 / R52 | VOLVO F 7-F 10-F 86-F 88-F 1233 |



Seçeceğiniz pompanın dönüş yönü, P.T.O. dönüş yönü ile ters olmalıdır.
The rotation of the choosen pump has to be opposite to the rotation of P.T.O.

P.T.O. montaj edildikten sonra ana şanzıman yağını tamamlayın.
Fill the oil of the gear box after mounting the P.T.O.

# VOLVO R5-SR52 DOUBLE GEAR ISO

## VOLVO R5-SR52 AKTARMALI ISO

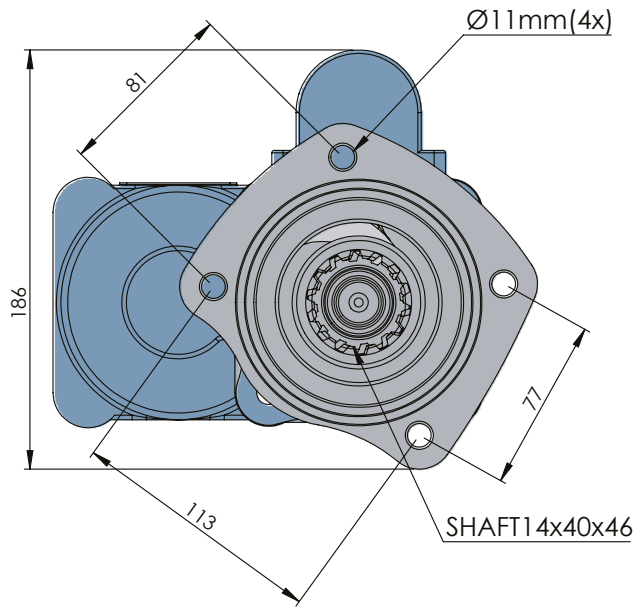




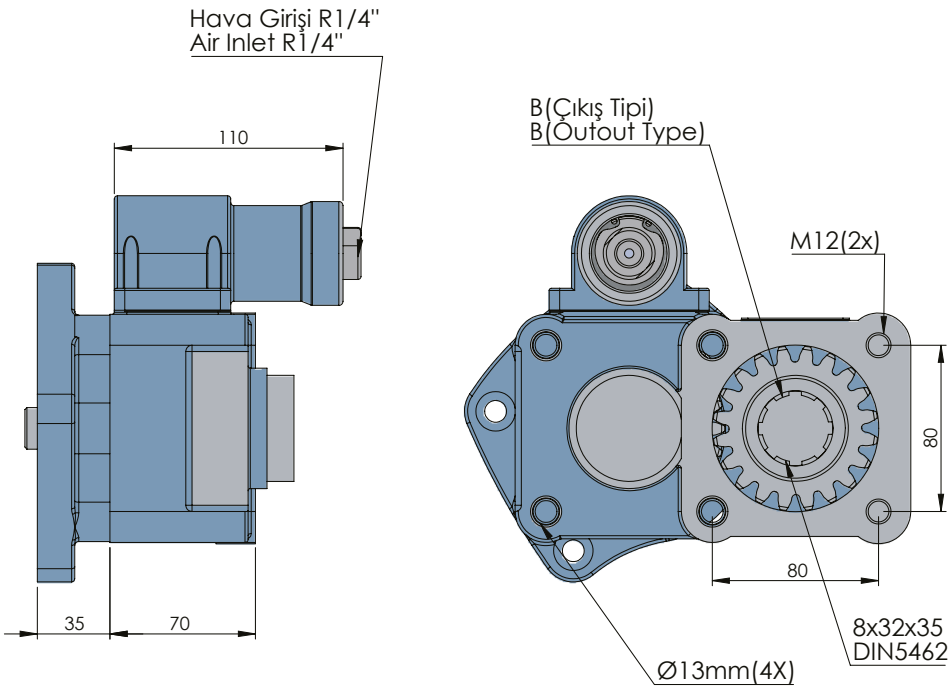


| CODE<br>KOD | TYPE<br>TİP (A) | MOUNTING TYPE<br>BAĞLANTI TİPİ (B) | MOUNTING SIDE<br>BAĞLANTI | TORQUE<br>TORK<br>(Kgm / Nm) | POWER<br>GÜÇ<br>(Hp / Kw) | SPEED<br>DEVİR<br>(RPM) | RATIO<br>ORAN |
|---|---|---|---|---|---|---|---|
| 50910311P0 | PNEUMATIC<br>PNÖMATİK | UNI ADAPTER<br>ADAPTÖRLÜ UNI | REAR<br>KUYRUK | 24 Kgm<br>235,5 Nm | 22,3 Hp<br>16,6 Kw | 675 RPM | 1:1,2 |
| 50910321P0 | | ISO | | | | | |
| 50910331P0 | | FLANGE<br>ADAPTÖRLÜ FLANŞLI | | | | | |
| 50910341P0 | | SHAFT<br>ADAPTÖRLÜ ŞAFTLI | | | | | |

| GEARBOX / ANA ŞANZIMANLAR | USED VEHICLES / KULLANILAN BAZI ARAÇLAR |
|---|---|
| R 51-R / SR 52 / R52 | VOLVO F 7-F 10-F 86-F 88-F 1233 |

Seçeceğiniz pompanın dönüş yönü, P.T.O. dönüş yönü ile ters olmalıdır.
The rotation of the choosen pump has to be opposite with the rotation of P.T.O.

P.T.O. montaj edildikten sonra ana şanzıman yağını tamamlayın.
Fill the oil of the gear box after mounting the P.T.O.

# VOLVO R6-62 SINGLE GEAR ISO

## VOLVO R6-62 TEK DİŞLİ ISO



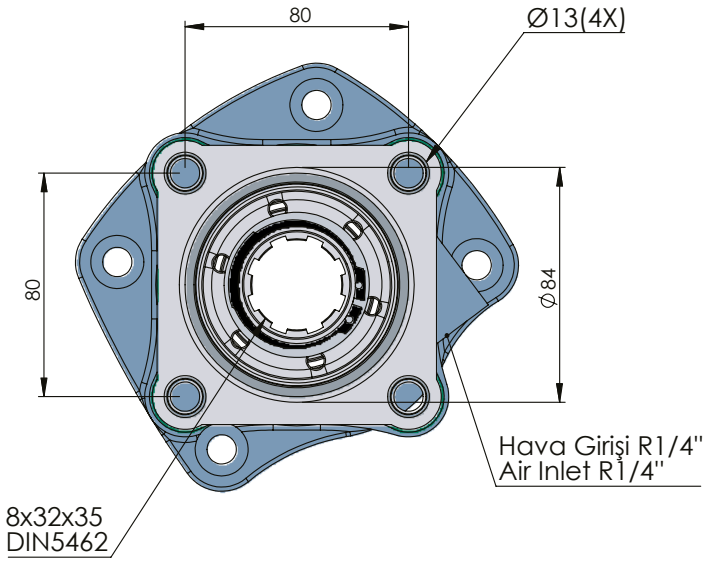


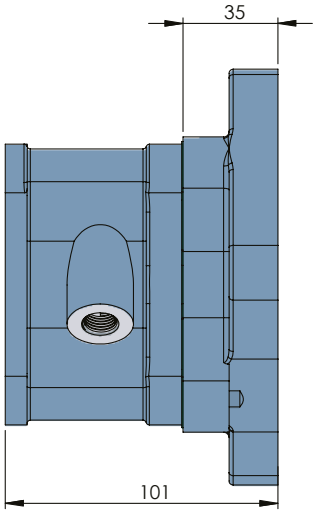


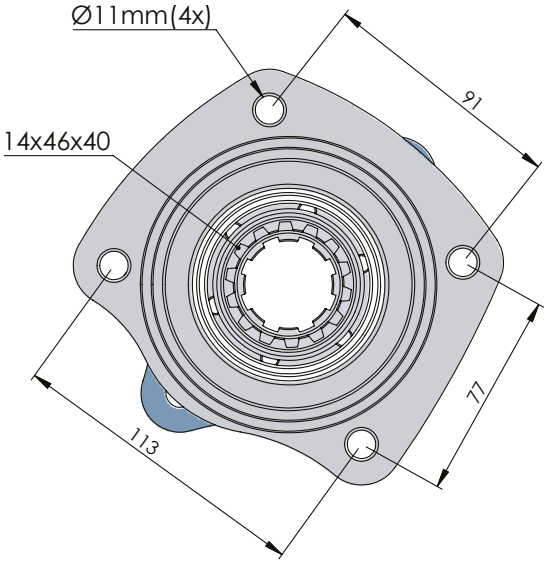


| CODE<br>KOD | TYPE<br>TİP (A) | MOUNTING TYPE<br>BAĞLANTI TİPİ (B) | MOUNTING SIDE<br>BAĞLANTI | TORQUE<br>TORK<br>(Kgm / Nm) | POWER<br>GÜÇ<br>(Hp / Kw) | SPEED<br>DEVİR<br>(RPM) | RATIO<br>ORAN |
|---|---|---|---|---|---|---|---|
| 50911312P0 | PNEUMATIC<br>PNÖMATİK | UNI ADAPTER<br>ADAPTÖRLÜ UNI | REAR<br>KUYRUK | 25 Kgm<br>245 Nm | 26,5 Hp<br>19,8 Kw | 780 RPM | 1:1,2 |
| 50911322P0 | | ISO | | | | | |
| 50911332P0 | | FLANGE<br>ADAPTÖRLÜ FLANŞLI | | | | | |
| 50911342P0 | | SHAFT<br>ADAPTÖRLÜ ŞAFTLI | | | | | |

| GEARBOX / ANA ŞANZIMANLAR | USED VEHICLES / KULLANILAN BAZI ARAÇLAR |
|---|---|
| R 51-R / SR 52 / R52 | VOLVO F 7-F 10-F 86-F 88-F 1233 |



Seçeceğiniz pompanın dönüş yönü, P.T.O. dönüş yönü ile ters olmalıdır.
The rotation of the choosen pump has to be opposite to the rotation of P.T.O.

P.T.O. montaj edildikten sonra ana şanzıman yağını tamamlayın.
Fill the oil of the gear box after mounting the P.T.O.

# VOLVO R6-62 DOUBLE GEAR ISO

## VOLVO R6-62 AKTARMALI ISO

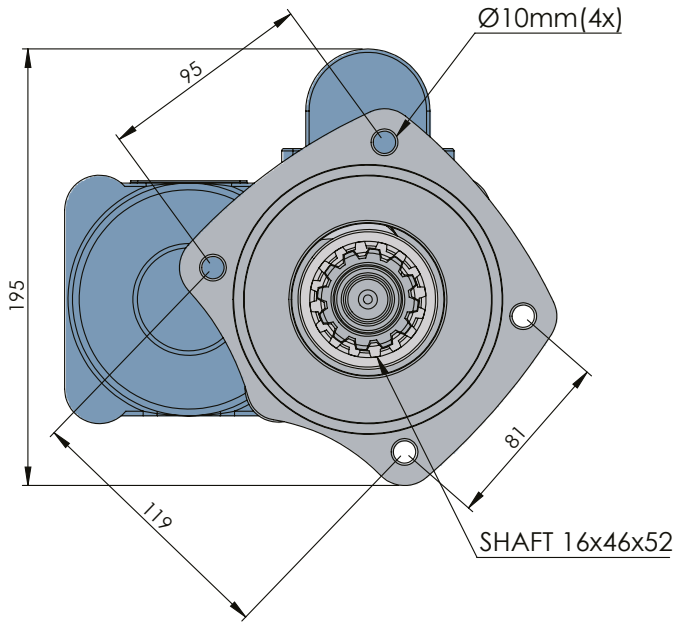




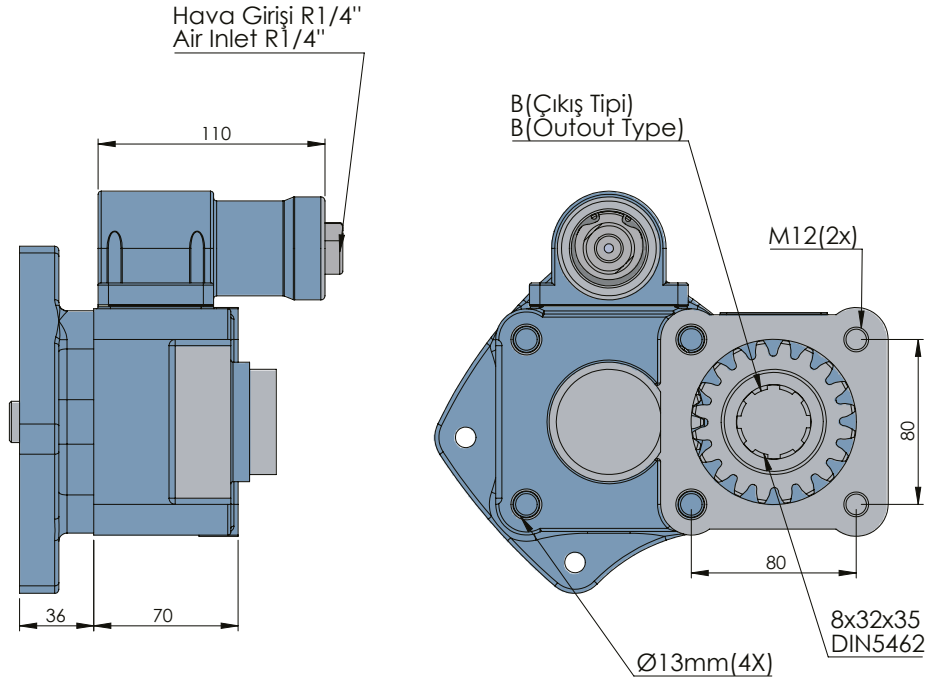


| CODE<br>KOD | TYPE<br>TİP (A) | MOUNTING TYPE<br>BAĞLANTI TİPİ (B) | MOUNTING SIDE<br>BAĞLANTI | TORQUE<br>TORK<br>(Kgm / Nm) | POWER<br>GÜÇ<br>(Hp / Kw) | SPEED<br>DEVİR<br>(RPM) | RATIO<br>ORAN |
|---|---|---|---|---|---|---|---|
| 50911311P0 | PNEUMATIC<br>PNÖMATİK | UNI ADAPTER<br>ADAPTÖRLÜ UNI | REAR<br>KUYRUK | 24 Kgm<br>235,5 Nm | 22,3 Hp<br>16,6 Kw | 675 RPM | 1:1,2 |
| 50911321P0 | | ISO | | | | | |
| 50911331P0 | | FLANGE<br>ADAPTÖRLÜ FLANŞLI | | | | | |
| 50911341P0 | | SHAFT<br>ADAPTÖRLÜ ŞAFTLI | | | | | |

| GEARBOX / ANA ŞANZIMANLAR | USED VEHICLES / KULLANILAN BAZI ARAÇLAR |
|---|---|
| R62-SR61-R62 / MR 62 B | F 7-F 10-F 12-F 88-F 89-F 1020-F 1225-N 10-N 12 VOLVO |

Seçeceğiniz pompanın dönüş yönü, P.T.O. dönüş yönü ile ters olmalıdır.
The rotation of the choosen pump has to be opposite with the rotation of P.T.O.

P.T.O. montaj edildikten sonra ana şanzıman yağını tamamlayın.
Fill the oil of the gear box after mounting the P.T.O.

# VOLVO SR / R70-72 SINGLE GEAR ISO

## VOLVO SR / R70-72 TEK DİŞLİ ISO



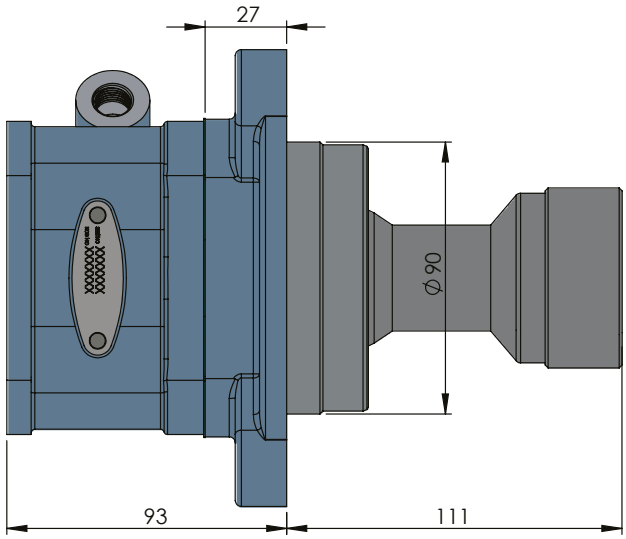


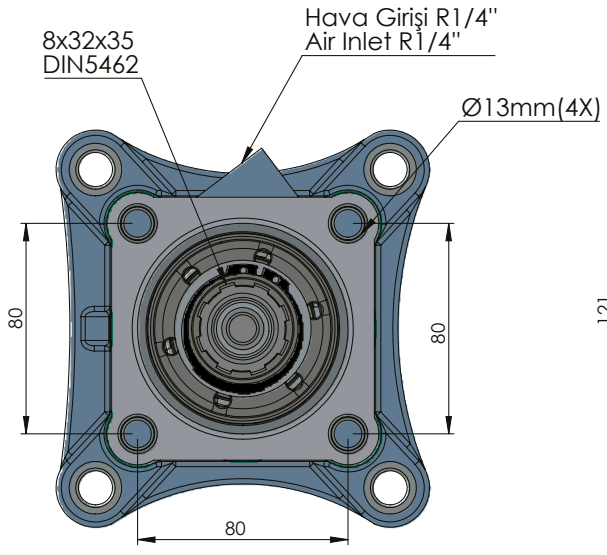


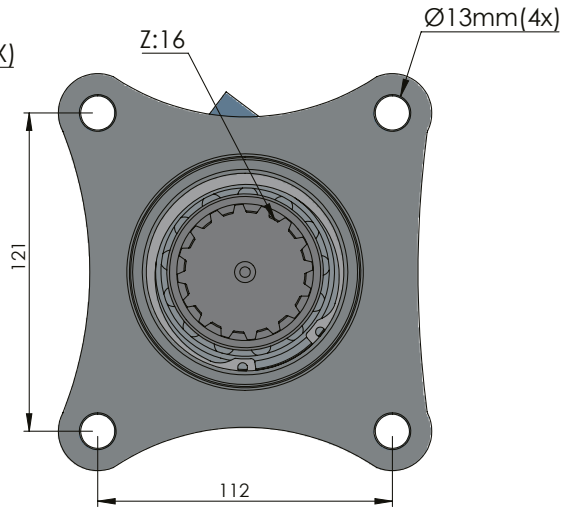


| CODE<br>KOD | TYPE<br>TİP (A) | MOUNTING TYPE<br>BAĞLANTI TİPİ (B) | MOUNTING SIDE<br>BAĞLANTI | TORQUE<br>TORK<br>(Kgm / Nm) | POWER<br>GÜÇ<br>(Hp / Kw) | SPEED<br>DEVİR<br>(RPM) | RATIO<br>ORAN |
|---|---|---|---|---|---|---|---|
| 50912312P0 | PNEUMATIC<br>PNÖMATİK | UNI ADAPTER<br>ADAPTÖRLÜ UNI | REAR<br>KUYRUK | 25 Kgm<br>245 Nm | 26,5 Hp<br>19,8 Kw | 780 RPM | 1:1,2 |
| 50912322P0 | | ISO | | | | | |
| 50912332P0 | | FLANGE<br>ADAPTÖRLÜ FLANŞLI | | | | | |
| 50912342P0 | | SHAFT<br>ADAPTÖRLÜ ŞAFTLI | | | | | |

| GEARBOX / ANA ŞANZIMANLAR | USED VEHICLES / KULLANILAN BAZI ARAÇLAR |
|---|---|
| SR/R70-72 | FL 7- FL 10 - F 12 -N 12-N 10-NL 12 VOLVO |



Seçeceğiniz pompanın dönüş yönü, P.T.O. dönüş yönü ile ters olmalıdır.
The rotation of the choosen pump has to be opposite to the rotation of P.T.O.

P.T.O. montaj edildikten sonra ana şanzıman yağını tamamlayın.
Fill the oil of the gear box after mounting the P.T.O.

# VOLVO SR / R70 -72 DOUBLE GEAR ISO

## VOLVO SR / R70 -72 AKTARMALI ISO

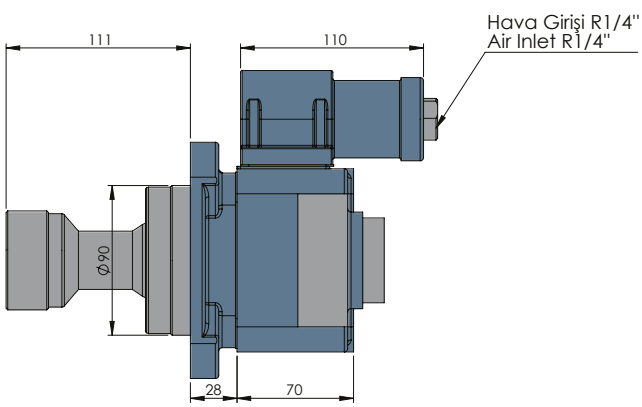




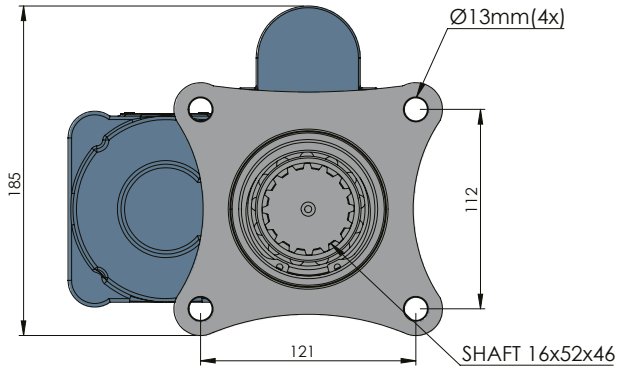


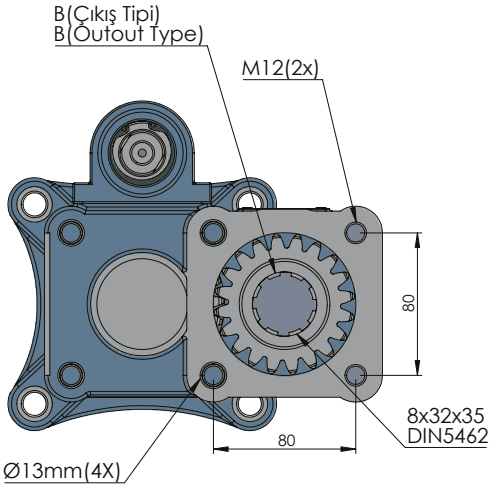


| CODE<br>KOD | TYPE<br>TİP (A) | MOUNTING TYPE<br>BAĞLANTI TİPİ (B) | MOUNTING SIDE<br>BAĞLANTI | TORQUE<br>TORK<br>(Kgm / Nm) | POWER<br>GÜÇ<br>(Hp / Kw) | SPEED<br>DEVİR<br>(RPM) | RATIO<br>ORAN |
|---|---|---|---|---|---|---|---|
| 50912311P0 | PNEUMATIC<br>PNÖMATİK | UNI ADAPTER<br>ADAPTÖRLÜ UNI | REAR<br>KUYRUK | 24 Kgm<br>235,4 Nm | 30,6 Hp<br>22,9 Kw | 1000 RPM | 1:1,2 |
| 50912321P0 | | ISO | | | | | |
| 50912331P0 | | FLANGE<br>ADAPTÖRLÜ FLANŞLI | | | | | |
| 50912341P0 | | SHAFT<br>ADAPTÖRLÜ ŞAFTLI | | | | | |

| GEARBOX / ANA ŞANZIMANLAR | USED VEHICLES / KULLANILAN BAZI ARAÇLAR |
|---|---|
| SR/R70-72 | FL 7- FL 10 - F 12 -N 12-N 10-NL 12 VOLVO |

Seçeceğiniz pompanın dönüş yönü, P.T.O. dönüş yönü ile ters olmalıdır.
The rotation of the choosen pump has to be opposite with the rotation of P.T.O.

P.T.O. montaj edildikten sonra ana şanzıman yağını tamamlayın.
Fill the oil of the gear box after mounting the P.T.O.

# VOLVO R 1400 / 1700 SHORT CARDAN SHAFT SINGLE GEAR ISO

## VOLVO R 1400 / 1700 KISA KARDAN MİLLİ TEK DİŞLİ ISO



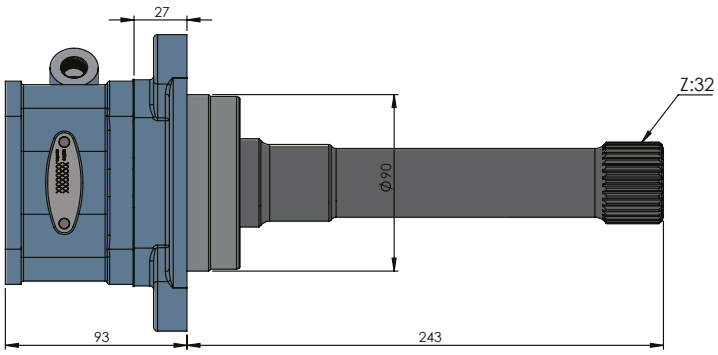


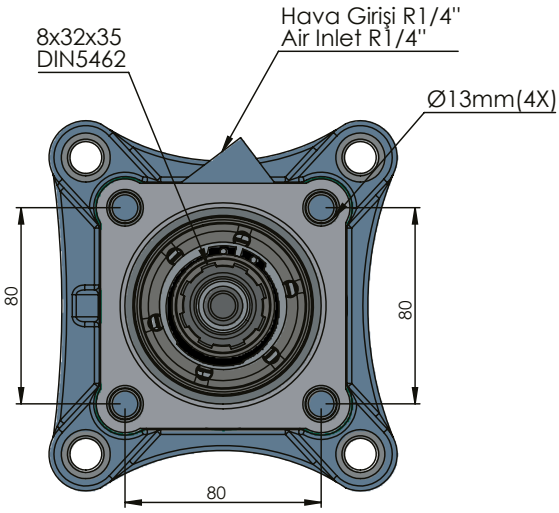


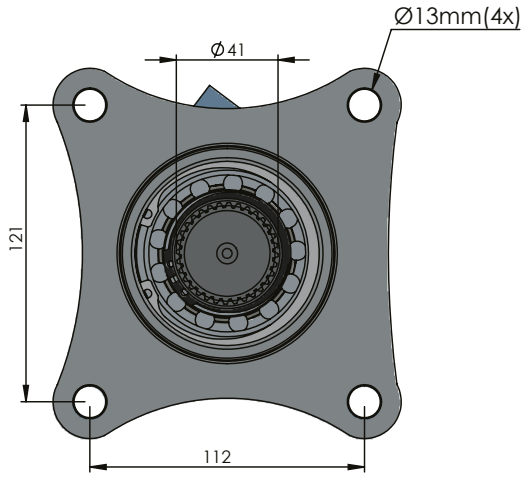


| CODE<br>KOD | TYPE<br>TİP (A) | MOUNTING TYPE<br>BAĞLANTI TİPİ (B) | MOUNTING SIDE<br>BAĞLANTI | TORQUE<br>TORK<br>(Kgm / Nm) | POWER<br>GÜÇ<br>(Hp / Kw) | SPEED<br>DEVİR<br>(RPM) | RATIO<br>ORAN |
|---|---|---|---|---|---|---|---|
| 50914312P0 | PNEUMATIC<br>PNÖMATİK | UNI ADAPTER<br>ADAPTÖRLÜ UNI | REAR<br>KUYRUK | 25 Kgm<br>245 Nm | 22,7 Hp<br>16,9 Kw | 450 RPM | 1:1 |
| 50914322P0 | | ISO | | | | | |
| 50914332P0 | | FLANGE<br>ADAPTÖRLÜ FLANŞLI | | | | | |
| 50914342P0 | | SHAFT<br>ADAPTÖRLÜ ŞAFTLI | | | | | |

| GEARBOX / ANA ŞANZIMANLAR | USED VEHICLES / KULLANILAN BAZI ARAÇLAR |
|---|---|
| VOLVO : R 1000 - R 1400 - R 1700 - R 1900 - R 2000 - R 2400 - RO 2400 - SR 1000 - SR 1400 - SR 1700 - SR 1900 - SR 2000 - SR 2400 - VT 1708 - VT 2009B - VT 2014 - VT 2212 - VT 2214 - VT 2214B - VT 2514 OD - VT 2514B - VT 2814B - VTO 2214B (OD) - VTO 2514B (OD) - VTO 2814B / | VOLVO: F 10 - F 12 FS 6X4 - F 16 - FH 12 - FH 12340 - FH 12380 - FH 12420 - FH 16 - FH 16470 - FH 16520 - FH 16560 - FH 16610 - FL 10 - FL 616 - FL 616 4X2 - FL 7 - FL 7 4X2 - FM 10320 - FM 10360 - FM 12 - FM 12340 - FM 12380 - FM 12380 8X4 - FM 12420 - FM 12420 8X4 - FM 12460 - FM 12500 - FM 7 - FM 7250 - FM 7290 - N 12 - N10 4X2 - NL 12 / |





Seçeceğiniz pompanın dönüş yönü, P.T.O. dönüş yönü ile ters olmalıdır.
The rotation of the choosen pump has to be opposite to the rotation of P.T.O.

P.T.O. montaj edildikten sonra ana şanzıman yağını tamamlayın.
Fill the oil of the gear box after mounting the P.T.O.

# VOLVO R 1400 / 1700 SHORT CARDAN SHAFT DOUBLE GEAR ISO

## VOLVO R 1400 / 1700 KISA KARDAN MİLLİ AKTARMALI ISO

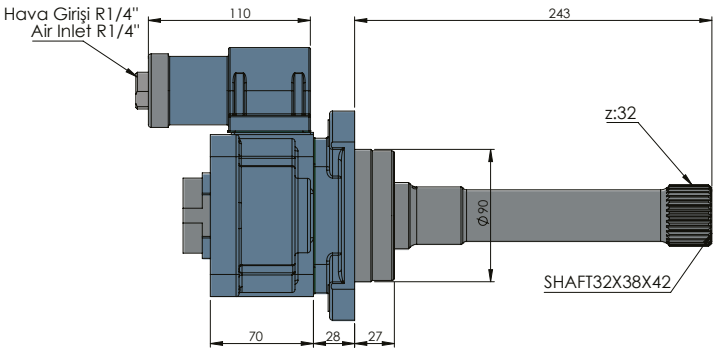




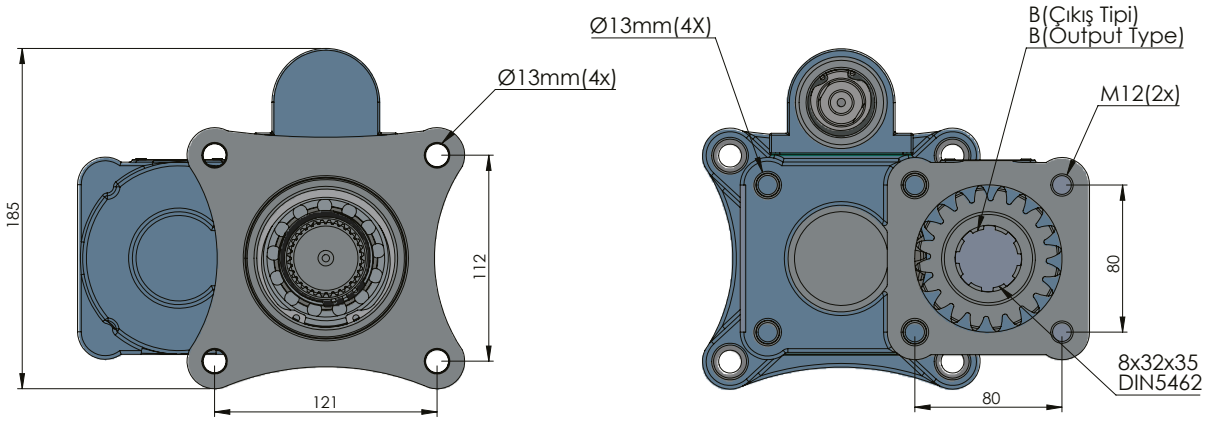


| CODE<br>KOD | TYPE<br>TİP (A) | MOUNTING TYPE<br>BAĞLANTI TİPİ (B) | MOUNTING SIDE<br>BAĞLANTI | TORQUE<br>TORK<br>(Kgm / Nm) | POWER<br>GÜÇ<br>(Hp / Kw) | SPEED<br>DEVİR<br>(RPM) | RATIO<br>ORAN |
|---|---|---|---|---|---|---|---|
| 50914311P0 | PNEUMATIC<br>PNÖMATİK | UNI ADAPTER<br>ADAPTÖRLÜ UNI | REAR<br>KUYRUK | 24 Kgm<br>235,5 Nm | 22,5 Hp<br>16,98Kw | 682 RPM | 1:1,2 |
| 50914321P0 | | ISO | | | | | |
| 50914331P0 | | FLANGE<br>ADAPTÖRLÜ FLANŞLI | | | | | |
| 50914341P0 | | SHAFT<br>ADAPTÖRLÜ ŞAFTLI | | | | | |

| GEARBOX / ANA ŞANZIMANLAR | USED VEHICLES / KULLANILAN BAZI ARAÇLAR |
|---|---|
| VOLVO : R 1000 - R 1400 - R 1700 - R 1900 - R 2000 - R 2400 - RO 2400 - SR 1000 - SR 1400 - SR 1700 - SR 1900 - SR 2000 - SR 2400 - VT 1708 - VT 2009B - VT 2014 - VT 2212 - VT 2214 - VT 2214B - VT 2514 OD - VT 2514B - VT 2814B - VTO 2214B (OD) - VTO 2514B (OD) - VTO 2814B / | VOLVO: F 10 - F 12 FS 6X4 - F 16 - FH 12 - FH 12340 - FH 12380 - FH 12420 - FH 16 - FH 16470 -<br>FH 16520 - FH 16560 - FH 16610 - FL 10 - FL 616 - FL 616 4X2 - FL 7 - FL 7 4X2 - FM 10320 -<br>FM 10360 - FM 12 - FM 12340 - FM 12380 - FM 12380 8X4 - FM 12420 - FM 12420 8X4 - FM 12460 -<br>FM 12500 - FM 7 - FM 7250 - FM 7290 - N 12 - N10 4X2 - NL 12 / |



Seçeceğiniz pompanın dönüş yönü, P.T.O. dönüş yönü ile ters olmalıdır.
The rotation of the choosen pump has to be opposite with the rotation of P.T.O.

P.T.O. montaj edildikten sonra ana şanzıman yağını tamamlayın.
Fill the oil of the gear box after mounting the P.T.O.

# VOLVO R 1400 / 1700 LONG CARDAN SHAFT SINGLE GEAR ISO

## VOLVO R 1400 / 1700 UZUN KARDAN MİLLİ TEK DİŞLİ ISO



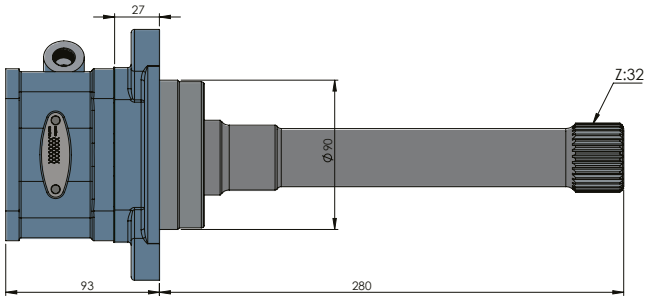


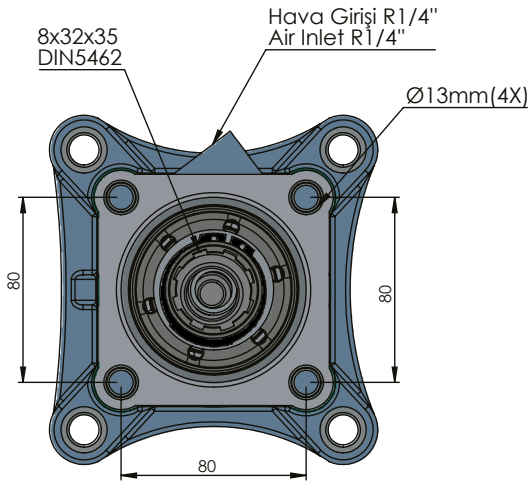


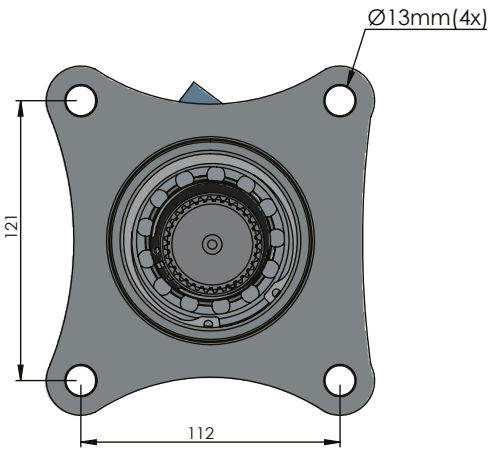


| CODE<br>KOD | TYPE<br>TİP (A) | MOUNTING TYPE<br>BAĞLANTI TİPİ (B) | MOUNTING SIDE<br>BAĞLANTI | TORQUE<br>TORK<br>(Kgm / Nm) | POWER<br>GÜÇ<br>(Hp / Kw) | SPEED<br>DEVİR<br>(RPM) | RATIO<br>ORAN |
|---|---|---|---|---|---|---|---|
| 50915312P0 | PNEUMATIC<br>PNÖMATİK | UNI ADAPTER<br>ADAPTÖRLÜ UNI | REAR<br>KUYRUK | 25 Kgm<br>245 Nm | 22,7 Hp<br>16,9 Kw | 450 RPM | 1:1 |
| 50915322P0 | | ISO | | | | | |
| 50915332P0 | | FLANGE<br>ADAPTÖRLÜ FLANŞLI | | | | | |
| 50915342P0 | | SHAFT<br>ADAPTÖRLÜ ŞAFTLI | | | | | |

| GEARBOX / ANA ŞANZIMANLAR | USED VEHICLES / KULLANILAN BAZI ARAÇLAR |
|---|---|
| VOLVO : R 1000 - R 1400 - R 1700 - R 1900 - R 2000 - R 2400 - RO 2400 - SR 1000 - SR 1400 - SR 1700 - SR 1900 - SR 2000 - SR 2400 - VT 1708 - VT 2009B - VT 2014 - VT 2212 - VT 2214 - VT 2214B - VT 2514 OD - VT 2514B - VT 2814B - VTO 2214B (OD) - VTO 2514B (OD) - VTO 2814B / | VOLVO: F 10 - F 12 FS 6X4 - F 16 - FH 12 - FH 12340 - FH 12380 - FH 12420 - FH 16 - FH 16470 - FH 16520 - FH 16560 - FH 16610 - FL 10 - FL 616 - FL 616 4X2 - FL 7 - FL 7 4X2 - FM 10320 - FM 10360 - FM 12 - FM 12340 - FM 12380 - FM 12380 8X4 - FM 12420 - FM 12420 8X4 - FM 12460 - FM 12500 - FM 7 - FM 7250 - FM 7290 - N 12 - N10 4X2 - NL 12 / |



Seçeceğiniz pompanın dönüş yönü, P.T.O. dönüş yönü ile ters olmalıdır.
The rotation of the choosen pump has to be opposite to the rotation of P.T.O.

P.T.O. montaj edildikten sonra ana şanzıman yağını tamamlayın.
Fill the oil of the gear box after mounting the P.T.O.

# VOLVO R 1400 / 1700 LONG CARDAN SHAFT DOUBLE GEAR ISO

## VOLVO R 1400 / 1700 UZUN KARDAN MİLLİ AKTARMALI ISO

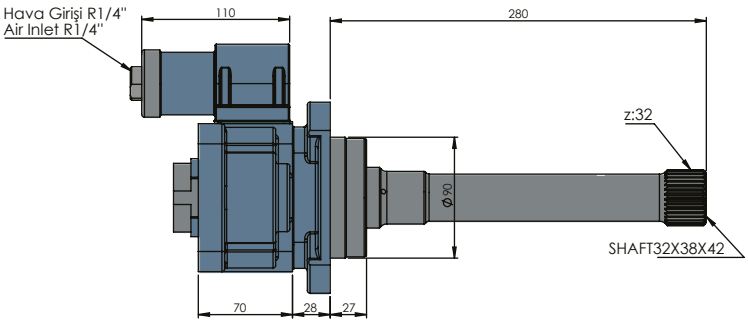




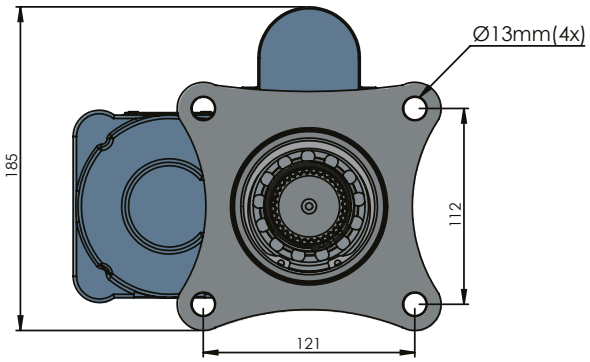


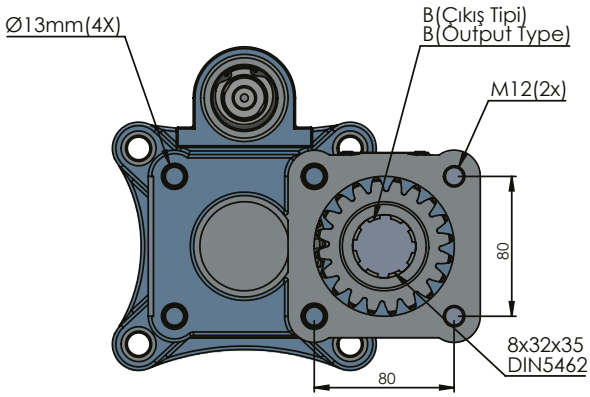


| CODE<br>KOD | TYPE<br>TİP (A) | MOUNTING TYPE<br>BAĞLANTI TİPİ (B) | MOUNTING SIDE<br>BAĞLANTI | TORQUE<br>TORK<br>(Kgm / Nm) | POWER<br>GÜÇ<br>(Hp / Kw) | SPEED<br>DEVİR<br>(RPM) | RATIO<br>ORAN |
|---|---|---|---|---|---|---|---|
| 50915311P0 | PNEUMATIC<br>PNÖMATİK | UNI ADAPTER<br>ADAPTÖRLÜ UNI | REAR<br>KUYRUK | 24 Kgm<br>235,5 Nm | 22,5 Hp<br>16,98Kw | 682 RPM | 1:1,2 |
| 50915321P0 | | ISO | | | | | |
| 50915331P0 | | FLANGE<br>ADAPTÖRLÜ FLANŞLI | | | | | |
| 50915341P0 | | SHAFT<br>ADAPTÖRLÜ ŞAFTLI | | | | | |

| GEARBOX / ANA ŞANZIMANLAR | USED VEHICLES / KULLANILAN BAZI ARAÇLAR |
|---|---|
| VOLVO : R 1000 - R 1400 - R 1700 - R 1900 - R 2000 - R 2400 - RO 2400 - SR 1000 - SR 1400 - SR 1700 - SR 1900 - SR 2000 - SR 2400 - VT 1708 - VT 2009B - VT 2014 - VT 2212 - VT 2214 - VT 2214B - VT 2514 OD - VT 2514B - VT 2814B - VTO 2214B (OD) - VTO 2514B (OD) - VTO 2814B / | VOLVO: F 10 - F 12 FS 6X4 - F 16 - FH 12 - FH 12340 - FH 12380 - FH 12420 - FH 16 - FH 16470 - FH 16520 - FH 16560 - FH 16610 - FL 10 - FL 616 - FL 616 4X2 - FL 7 - FL 7 4X2 - FM 10320 - FM 10360 - FM 12 - FM 12340 - FM 12380 - FM 12380 8X4 - FM 12420 - FM 12420 8X4 - FM 12460 - FM 12500 - FM 7 - FM 7250 - FM 7290 - N 12 - N10 4X2 - NL 12 / |

Seçeceğiniz pompanın dönüş yönü, P.T.O. dönüş yönü ile ters olmalıdır.
The rotation of the choosen pump has to be opposite with the rotation of P.T.O.

P.T.O. montaj edildikten sonra ana şanzıman yağını tamamlayın.
Fill the oil of the gear box after mounting the P.T.O.

# VOLVO AT-2412 SINGLE GEAR ISO

## VOLVO AT-2412 TEK DİŞLİ ISO



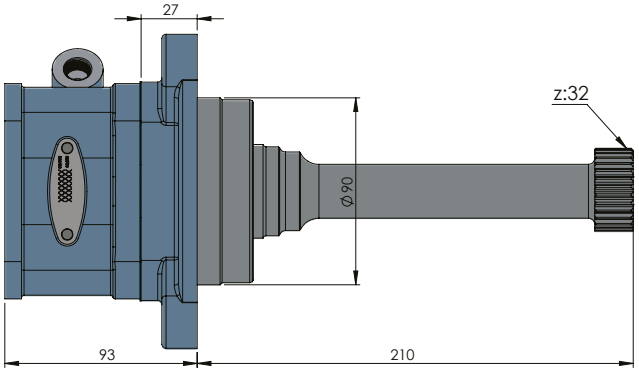


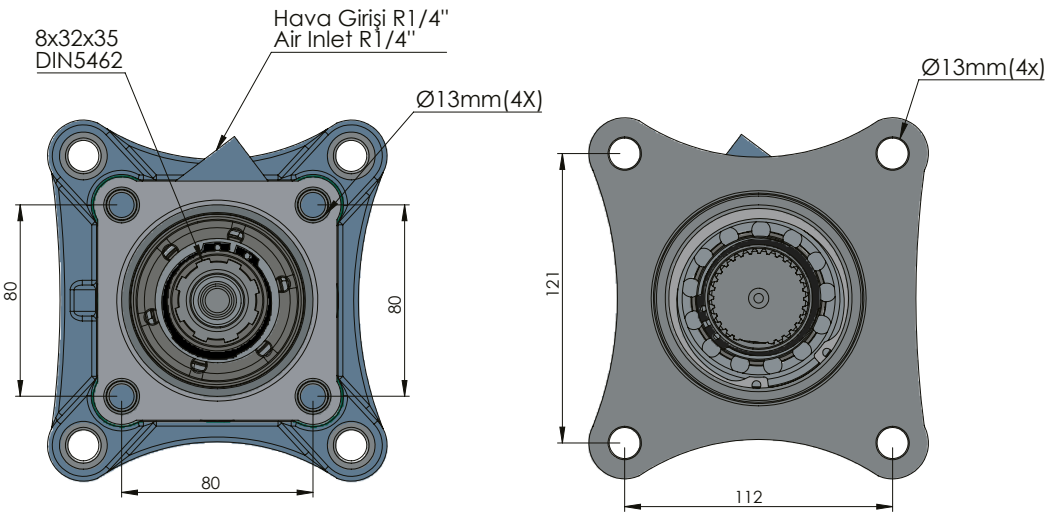


| CODE<br>KOD | TYPE<br>TİP (A) | MOUNTING TYPE<br>BAĞLANTI TİPİ (B) | MOUNTING SIDE<br>BAĞLANTI | TORQUE<br>TORK<br>(Kgm / Nm) | POWER<br>GÜÇ<br>(Hp / Kw) | SPEED<br>DEVİR<br>(RPM) | RATIO<br>ORAN |
|---|---|---|---|---|---|---|---|
| 51811312P0 | PNEUMATIC<br>PNÖMATİK | UNI ADAPTER<br>ADAPTÖRLÜ UNI | REAR<br>KUYRUK | 25 Kgm<br>245 Nm | 22,7 Hp<br>16,9 Kw | 450 RPM | 1:1 |
| 51811322P0 | | ISO | | | | | |
| 51811332P0 | | FLANGE<br>ADAPTÖRLÜ FLANŞLI | | | | | |
| 51811342P0 | | SHAFT<br>ADAPTÖRLÜ ŞAFTLI | | | | | |

| GEARBOX / ANA ŞANZIMANLAR | USED VEHICLES / KULLANILAN BAZI ARAÇLAR |
|---|---|
| AT-2412C, AT-2412D, AT-2512C, AT-2612D, AT-2612E, AT-2812C, AT-2812D, ATO-2512C, ATO2612D , ATO-3112C, V-2412AT, V-2512AT, AT 2514,AT 2515,V-2812AT, VO-2512AT, VO-3112AT, VT-2512C, VT-2812C, VTO-2512C, VTO-3112C, DT-2412 C, VOLVO VO 3112 AT | VOLVO FH / FH 12 / FM / FM 12 / F 9 / FMX - RENAULT KERAX 440 / FM 13 / FH 13 RENAULT PREMİUM 430.19T / VOLVO B13R-D13C-FM 400 / FM 450RENAULT KERAX DXI / MAGNUM DXI / MIDLUM DXI / PREMIUM DXI 430.19 |



Seçeceğiniz pompanın dönüş yönü, P.T.O. dönüş yönü ile ters olmalıdır.
The rotation of the choosen pump has to be opposite to the rotation of P.T.O.

P.T.O. montaj edildikten sonra ana şanzıman yağını tamamlayın.
Fill the oil of the gear box after mounting the P.T.O.

# RENAULT B9-B18



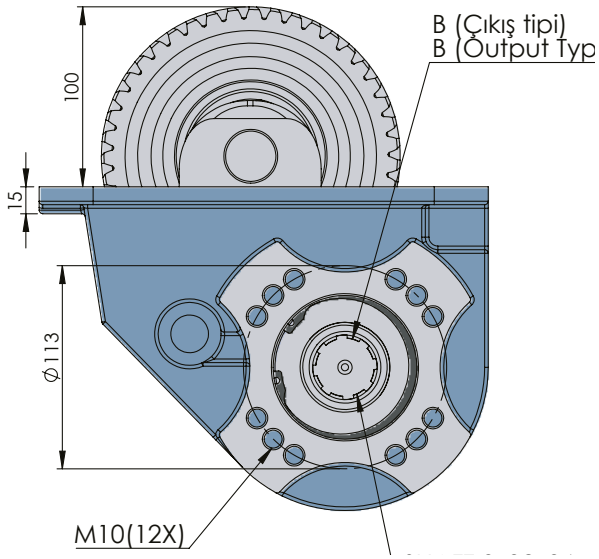


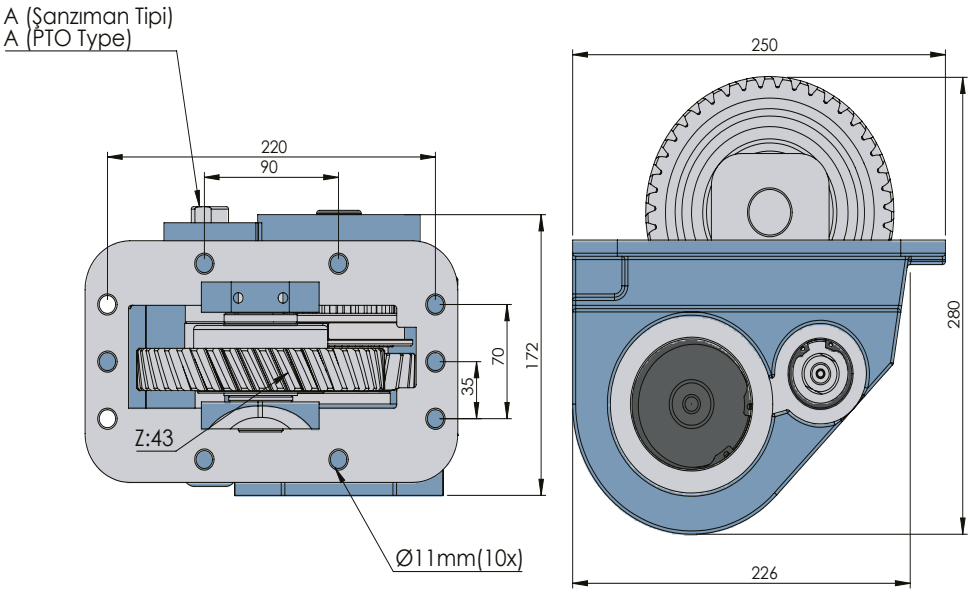


| CODE<br>KOD | TYPE<br>TİP (A) | MOUNTING TYPE<br>BAĞLANTI TİPİ (B) | MOUNTING SIDE<br>BAĞLANTI | TORQUE<br>TORK<br>(Kgm / Nm) | POWER<br>GÜÇ<br>(Hp / Kw) | SPEED<br>DEVİR<br>(RPM) | RATIO<br>ORAN |
|---|---|---|---|---|---|---|---|
| 51810512P0 | PNEUMATIC<br>PNÖMATİK | UNI ADAPTER<br>ADAPTÖRLÜ UNI | SIDE<br>YAN | 18,2 Kgm<br>178,5 Nm | 15 Hp<br>11,2 Kw | 750 RPM | 1:1,7 |
| 51810522P0 | | ISO | | | | | |
| 51810532P0 | | FLANGE<br>ADAPTÖRLÜ FLANŞLI | | | | | |
| 51810542P0 | | SHAFT<br>ADAPTÖRLÜ ŞAFTLI | | | | | |

| GEARBOX / ANA ŞANZIMANLAR | USED VEHICLES / KULLANILAN BAZI ARAÇLAR |
|---|---|
| B9 / B18 / B18200 L 42 B9-150 | RENAULT ( R.V.I) G340TI MAXTER 280-340-385-400 PREMIUM 430-470 MAGNUM INTEGRAL |

Seçeceğiniz pompanın dönüş yönü, P.T.O. dönüş yönü ile ters olmalıdır.
The rotation of the choosen pump has to be opposite with the rotation of P.T.O.

P.T.O. montaj edildikten sonra ana şanzıman yağını tamamlayın.
Fill the oil of the gear box after mounting the P.T.O.

# HYUNDAI HD 35



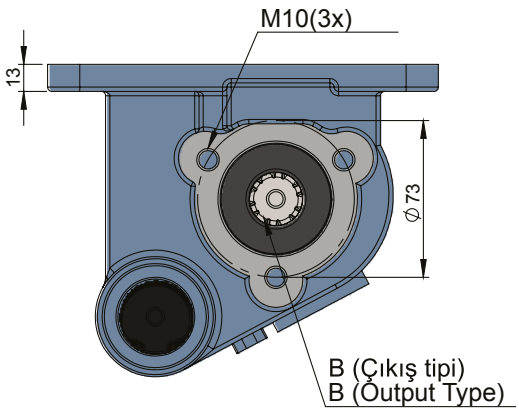


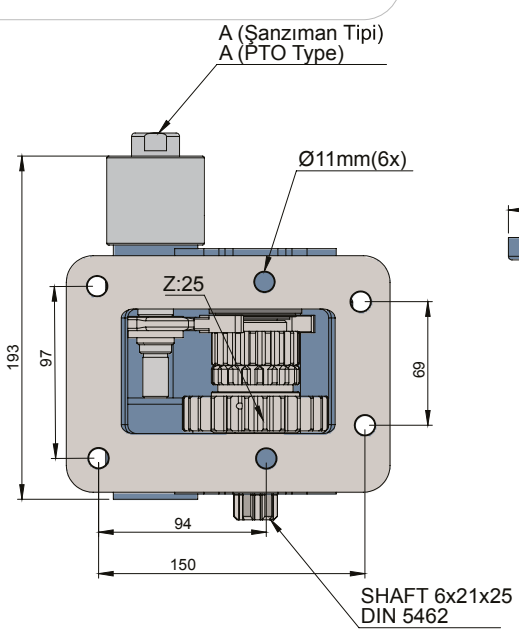


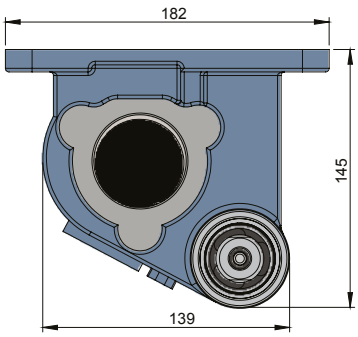


| CODE<br>KOD | TYPE<br>TİP (A) | MOUNTING TYPE<br>BAĞLANTI TİPİ (B) | MOUNTING SIDE<br>BAĞLANTI | TORQUE<br>TORK<br>(Kgm / Nm) | POWER<br>GÜÇ<br>(Hp / Kw) | SPEED<br>DEVİR<br>(RPM) | RATIO<br>ORAN |
|---|---|---|---|---|---|---|---|
| 51210512M0 | MECHANIC<br>MEKANİK | UNI | SIDE<br>YAN | 18,2 Kgm<br>178,5 Nm | 9,4 Hp<br>7 Kw | 375 RPM | 1:1 |
| 51210522M0 | | ISO ADAPTER<br>ADAPTÖRLÜ ISO | | | | | |
| 51210532M0 | | FLANGE<br>FLANŞLI | | | | | |
| 51210542M0 | | SHAFT<br>ŞAFTLI | | | | | |
| 51210512V0 | VACUUM<br>VAKUMLU | UNI | | | | | |
| 51210522V0 | | ISO ADAPTER<br>ADAPTÖRLÜ ISO | | | | | |
| 51210532V0 | | FLANGE<br>FLANŞLI | | | | | |
| 51210542V0 | | SHAFT<br>ŞAFTLI | | | | | |

| GEARBOX / ANA ŞANZIMANLAR | USED VEHICLES / KULLANILAN BAZI ARAÇLAR |
|---|---|
| M1S5 - M2S5 - M3S5 -(4,444-5,494, 53886-5,181) | HT 1016698 / 430505H503 / H 350 / 3F 412 / HD 50-72-77 HYUNDAI / HD 65 / 03RO4495 /<br>03RO4499 03RO4493 / HD 35 / HT 102T00336 / HD 78 / HYUNDAI MIGHTY |



Seçeceğiniz pompanın dönüş yönü, P.T.O. dönüş yönü ile ters olmalıdır.
The rotation of the choosen pump has to be opposite to the rotation of P.T.O.

P.T.O. montaj edildikten sonra ana şanzıman yağını tamamlayın.
Fill the oil of the gear box after mounting the P.T.O.

# HYUNDAI HD 45

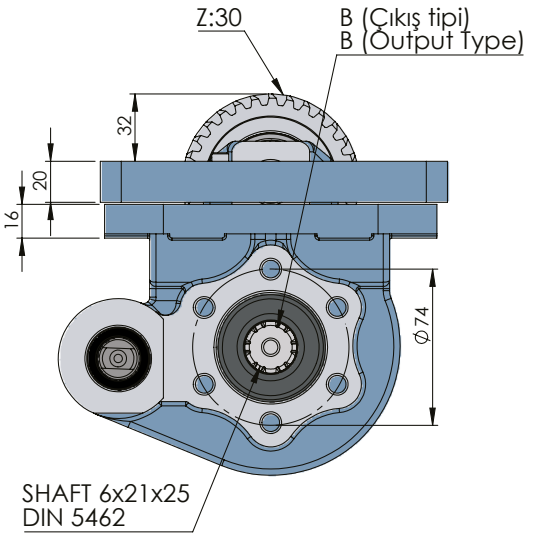




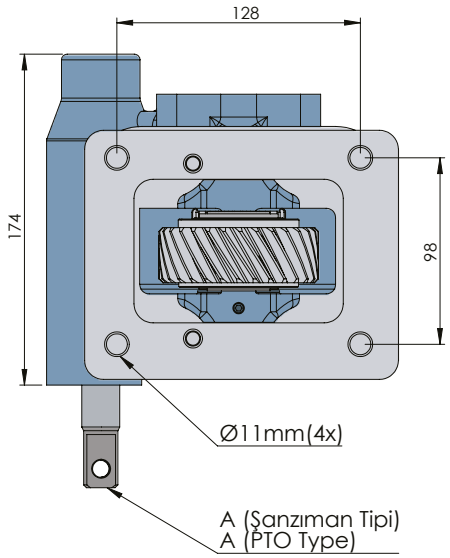


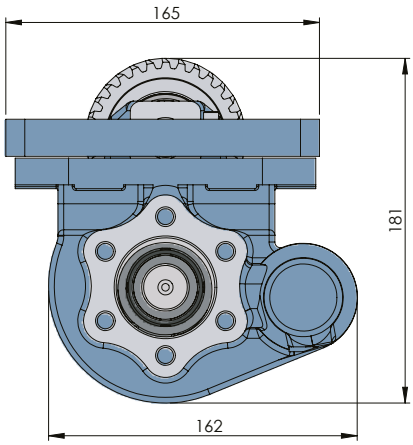


| CODE<br>KOD | TYPE<br>TİP (A) | MOUNTING TYPE<br>BAĞLANTI TİPİ (B) | MOUNTING SIDE<br>BAĞLANTI | TORQUE<br>TORK<br>(Kgm / Nm) | POWER<br>GÜÇ<br>(Hp / Kw) | SPEED<br>DEVİR<br>(RPM) | RATIO<br>ORAN |
|---|---|---|---|---|---|---|---|
| 51211512M0 | MECHANIC<br>MEKANİK | UNI | SIDE<br>YAN | 24.3 Kgm<br>238,5 Nm | 25 Kw<br>33,5 Hp | 550 RPM | 1:1 |
| 51211522M0 | | ISO ADAPTER<br>ADAPTÖRLÜ ISO | | | | | |
| 51211532M0 | | FLANGE<br>FLANŞLI | | | | | |
| 51211542M0 | | SHAFT<br>ŞAFTLI | | | | | |

| GEARBOX / ANA ŞANZIMANLAR | USED VEHICLES / KULLANILAN BAZI ARAÇLAR |
|---|---|
| HYUNDAI | HD 45 HYUNDAI |



Seçeceğiniz pompanın dönüş yönü, P.T.O. dönüş yönü ile ters olmalıdır.
The rotation of the choosen pump has to be opposite with the rotation of P.T.O.

P.T.O. montaj edildikten sonra ana şanzıman yağını tamamlayın.
Fill the oil of the gear box after mounting the P.T.O.

# HYUNDAI HD 75



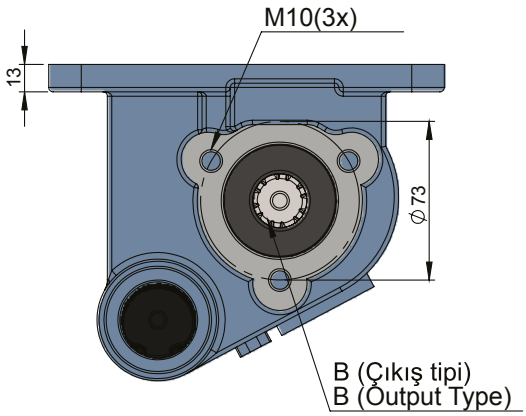


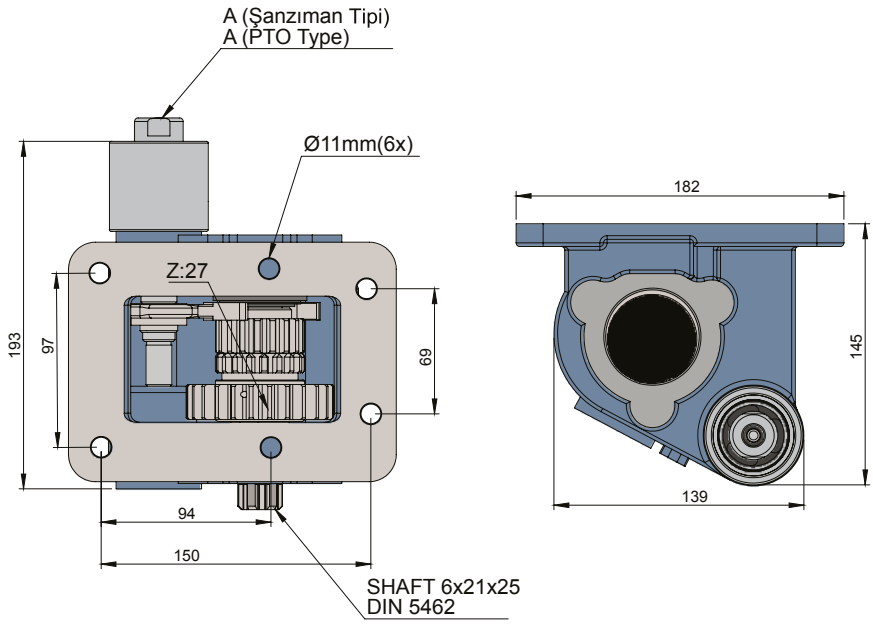


| CODE<br>KOD | TYPE<br>TİP (A) | MOUNTING TYPE<br>BAĞLANTI TİPİ (B) | MOUNTING SIDE<br>BAĞLANTI | TORQUE<br>TORK<br>(Kgm / Nm) | POWER<br>GÜÇ<br>(Hp / Kw) | SPEED<br>DEVİR<br>(RPM) | RATIO<br>ORAN |
|---|---|---|---|---|---|---|---|
| 51213512M0 | MECHANIC<br>MEKANİK | UNI | SIDE<br>YAN | 24,2 Kgm<br>237,4 Nm | 11,7 Hp<br>8,7 Kw | 350 RPM | 1:1 |
| 51213522M0 | | ISO ADAPTER<br>ADAPTÖRLÜ ISO | | | | | |
| 51213532M0 | | FLANGE<br>FLANŞLI | | | | | |
| 51213542M0 | | SHAFT<br>ŞAFTLI | | | | | |
| 51213512V0 | VACUUM<br>VAKUMLU | UNI | | | | | |
| 51213522V0 | | ISO ADAPTER<br>ADAPTÖRLÜ ISO | | | | | |
| 51213532V0 | | FLANGE<br>FLANŞLI | | | | | |
| 51213542V0 | | SHAFT<br>ŞAFTLI | | | | | |

| GEARBOX / ANA ŞANZIMANLAR | USED VEHICLES / KULLANILAN BAZI ARAÇLAR |
|---|---|
| HD105 S106 853 / 105 S106 853 /105 S1925 | HD 75 KARSAN - HD 72 EURO2 |

Seçeceğiniz pompanın dönüş yönü, P.T.O. dönüş yönü ile ters olmalıdır.
The rotation of the choosen pump has to be opposite to the rotation of P.T.O.

P.T.O. montaj edildikten sonra ana şanzıman yağını tamamlayın.
Fill the oil of the gear box after mounting the P.T.O.

# HYUNDAI HD 75 EURO 4 (5 TRANSMISSION)

## HYUNDAI HD 75 EURO 4 (5 VİTES)

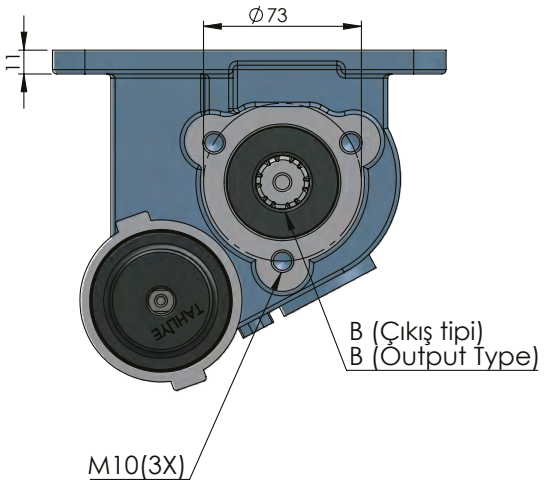




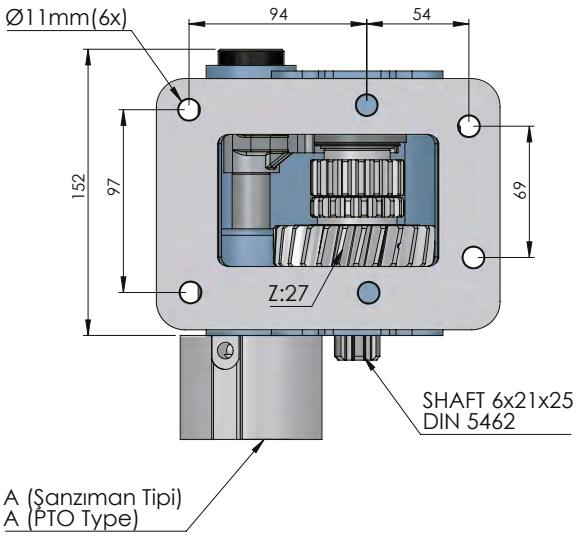


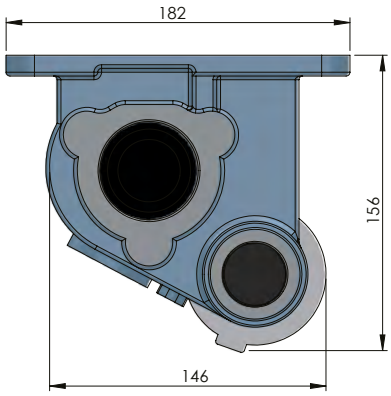


| CODE<br>KOD | TYPE<br>TİP (A) | MOUNTING TYPE<br>BAĞLANTI TİPİ (B) | MOUNTING SIDE<br>BAĞLANTI | TORQUE<br>TORK<br>(Kgm / Nm) | POWER<br>GÜÇ<br>(Hp / Kw) | SPEED<br>DEVİR<br>(RPM) | RATIO<br>ORAN |
|---|---|---|---|---|---|---|---|
| 51214512V0 | VACUUM<br>VAKUMLU | UNI | SIDE<br>YAN | 22 Kgm<br>220 Nm | 31,6 Hp<br>23,6 Kw | 1000 RPM | 1:0,95 |
| 51214522V0 | | ISO ADAPTER<br>ADAPTÖRLÜ ISO | | | | | |
| 51214532V0 | | FLANGE<br>FLANŞLI | | | | | |
| 51214542V0 | | SHAFT<br>ŞAFTLI | | | | | |

| GEARBOX / ANA ŞANZIMANLAR | USED VEHICLES / KULLANILAN BAZI ARAÇLAR |
|---|---|
| HD105W02132 (5 VİTES) / 5 S 21187 | HD 75 / HD 35 EURO 4 / 75 EURO 4 (5 VİTES) |

Seçeceğiniz pompanın dönüş yönü, P.T.O. dönüş yönü ile ters olmalıdır.
The rotation of the choosen pump has to be opposite with the rotation of P.T.O.

P.T.O. montaj edildikten sonra ana şanzıman yağını tamamlayın.
Fill the oil of the gear box after mounting the P.T.O.

# HYUNDAI HD 75 EURO 4 (6 TRANSMISSION)

## HYUNDAI HD 75 EURO 4 (6 VİTES)



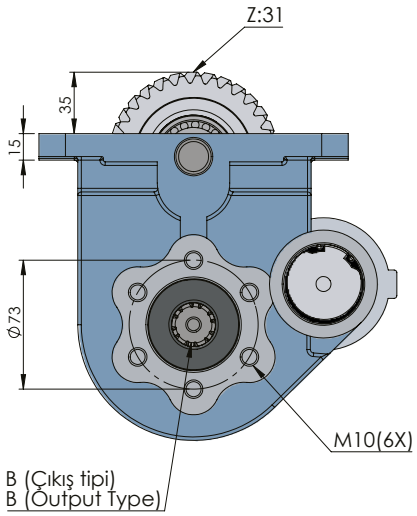


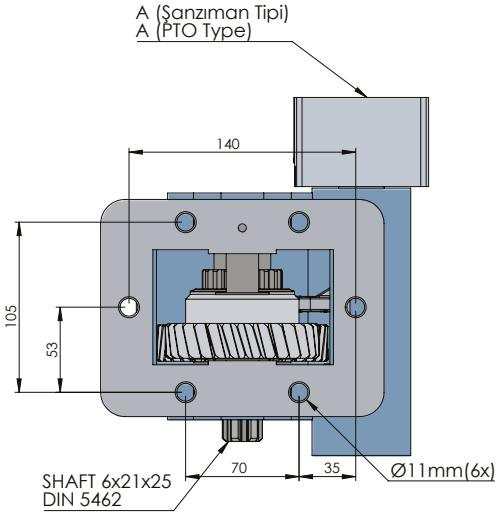


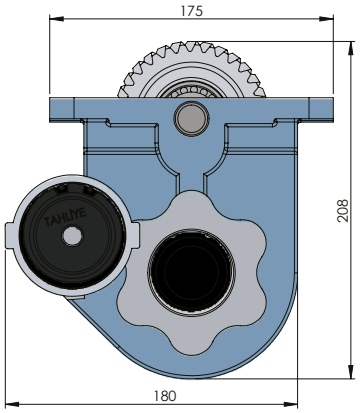


| CODE<br>KOD | TYPE<br>TİP (A) | MOUNTING TYPE<br>BAĞLANTI TİPİ (B) | MOUNTING SIDE<br>BAĞLANTI | TORQUE<br>TORK<br>(Kgm / Nm) | POWER<br>GÜÇ<br>(Hp / Kw) | SPEED<br>DEVİR<br>(RPM) | RATIO<br>ORAN |
|---|---|---|---|---|---|---|---|
| 51215512V0 | VACUUM<br>VAKUMLU | UNI | SIDE<br>YAN | 22 Kgm<br>220 Nm | 31,6 Hp<br>23,6 Kw | 1000 RPM | 1:0,95 |
| 51215522V0 | | ISO ADAPTER<br>ADAPTÖRLÜ ISO | | | | | |
| 51215532V0 | | FLANGE<br>FLANŞLI | | | | | |
| 51215542V0 | | SHAFT<br>ŞAFTLI | | | | | |

| GEARBOX / ANA ŞANZIMANLAR | USED VEHICLES / KULLANILAN BAZI ARAÇLAR |
|---|---|
| T0 60S6 / 60S5 ( 6 VİTES ) HYD.02.60S6.V.KF 43000-5L601 MIGHTY WIDE 6.701 / 0.732 HYUNDAI DYMOS | 2011 6 VİTES YENİ HYUNDAI HD 75 EURO 4 / HD 75 F 160 |



Seçeceğiniz pompanın dönüş yönü, P.T.O. dönüş yönü ile ters olmalıdır.
The rotation of the choosen pump has to be opposite to the rotation of P.T.O.

P.T.O. montaj edildikten sonra ana şanzıman yağını tamamlayın.
Fill the oil of the gear box after mounting the P.T.O.

# HYUNDAI HD 120

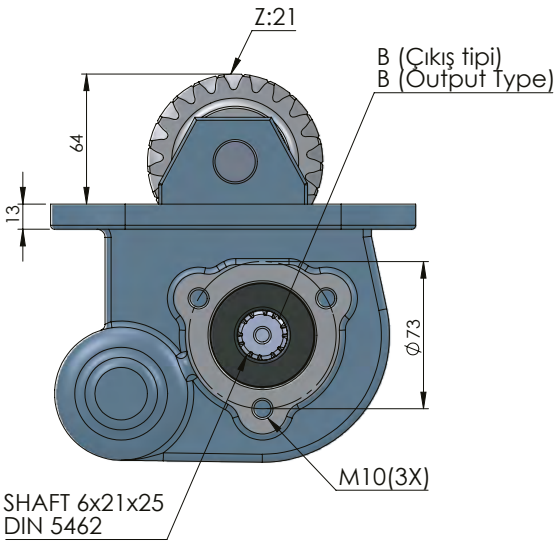




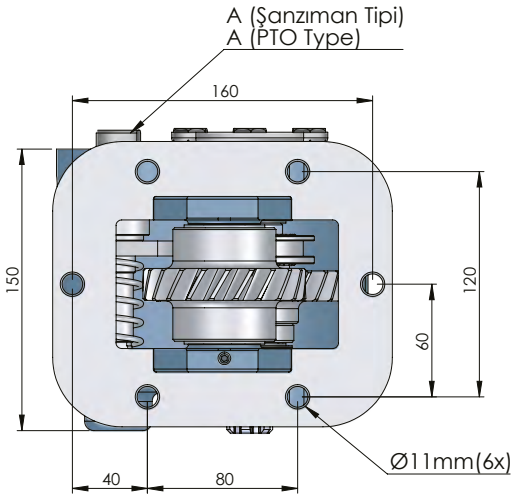


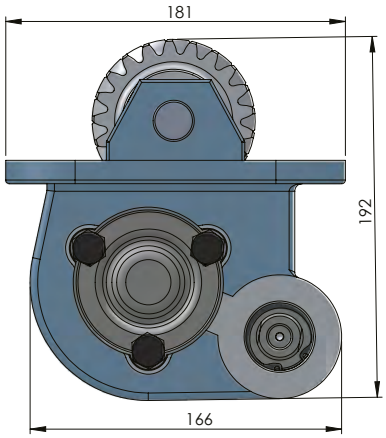


| CODE<br>KOD | TYPE<br>TİP (A) | MOUNTING TYPE<br>BAĞLANTI TİPİ (B) | MOUNTING SIDE<br>BAĞLANTI | TORQUE<br>TORK<br>(Kgm / Nm) | POWER<br>GÜÇ<br>(Hp / Kw) | SPEED<br>DEVİR<br>(RPM) | RATIO<br>ORAN |
|---|---|---|---|---|---|---|---|
| 51216512M0 | MECHANIC<br>MEKANİK | UNI | SIDE<br>YAN | 20 Kgm<br>196 Nm | 27 Hp<br>20 Kw | 1000 RPM | 1:1,17 |
| 51216522M0 | | ISO ADAPTER<br>ADAPTÖRLÜ ISO | | | | | |
| 51216532M0 | | FLANGE<br>FLANŞLI | | | | | |
| 51216542M0 | | SHAFT<br>ŞAFTLI | | | | | |
| 51216512P0 | PNÖMATİK<br>PNEUMATIC | UNI | | | | | |
| 51216522P0 | | ISO ADAPTER<br>ADAPTÖRLÜ ISO | | | | | |
| 51216532P0 | | FLANGE<br>FLANŞLI | | | | | |
| 51216542P0 | | SHAFT<br>ŞAFTLI | | | | | |

| GEARBOX / ANA ŞANZIMANLAR | USED VEHICLES / KULLANILAN BAZI ARAÇLAR |
|---|---|
| KH 10 | HYUNDAI HD72 / HD 78 / HD 65 / HD 160 ( 8 DELİKLİ ) |

Seçeceğiniz pompanın dönüş yönü, P.T.O. dönüş yönü ile ters olmalıdır.
The rotation of the choosen pump has to be opposite with the rotation of P.T.O.

P.T.O. montaj edildikten sonra ana şanzıman yağını tamamlayın.
Fill the oil of the gear box after mounting the P.T.O.

# MACK 1 DM600



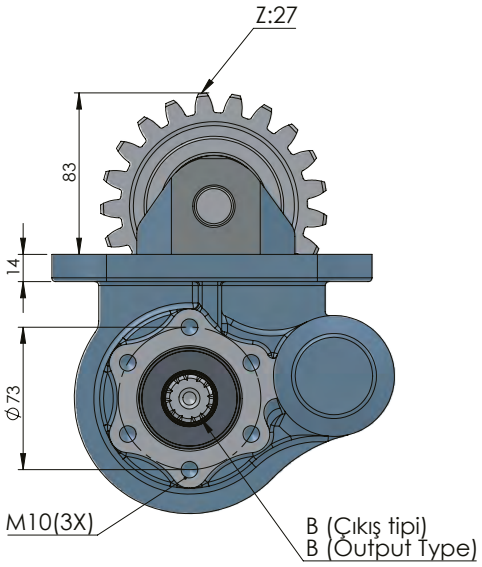


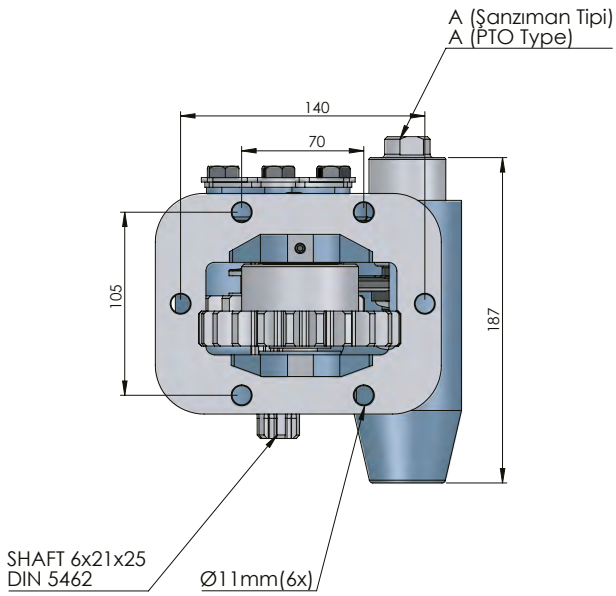


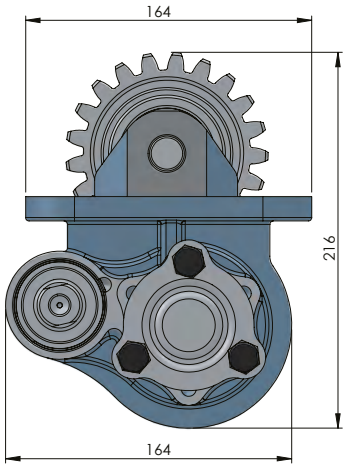


| CODE<br>KOD | TYPE<br>TİP (A) | MOUNTING TYPE<br>BAĞLANTI TİPİ (B) | MOUNTING SIDE<br>BAĞLANTI | TORQUE<br>TORK<br>(Kgm / Nm) | POWER<br>GÜÇ<br>(Hp / Kw) | SPEED<br>DEVİR<br>(RPM) | RATIO<br>ORAN |
|---|---|---|---|---|---|---|---|
| 51111512P0 | PNEUMATIC<br>PNÖMATİK | UNI | SIDE<br>YAN | 25 Kgm<br>245 Nm | 47 Hp<br>35 Kw | 950 RPM | 1:1,16 |
| 51111522P0 | | ISO ADAPTER<br>ADAPTÖRLÜ ISO | | | | | |
| 51111532P0 | | FLANGE<br>FLANŞLI | | | | | |
| 51111542P0 | | SHAFT<br>ŞAFTLI | | | | | |

| GEARBOX / ANA ŞANZIMANLAR | USED VEHICLES / KULLANILAN BAZI ARAÇLAR |
|---|---|
| DM 600-227589-281KB565-284KB5159A MACK | MACK DM600-DM611 S 6296-MACK 5.08-MACK TRD 722 |



Seçeceğiniz pompanın dönüş yönü, P.T.O. dönüş yönü ile ters olmalıdır.
The rotation of the choosen pump has to be opposite to the rotation of P.T.O.

P.T.O. montaj edildikten sonra ana şanzıman yağını tamamlayın.
Fill the oil of the gear box after mounting the P.T.O.

# TURNER 3017

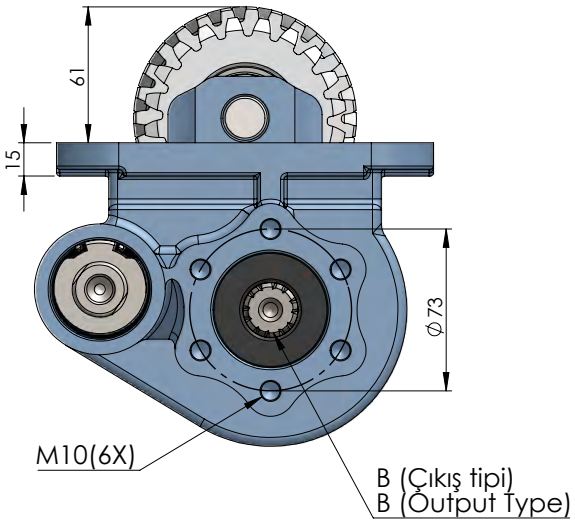




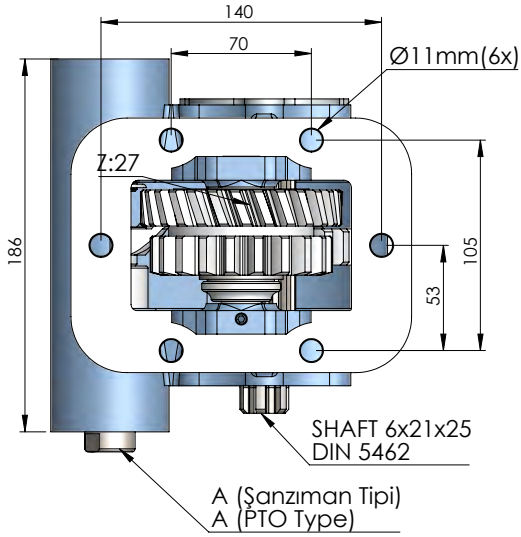


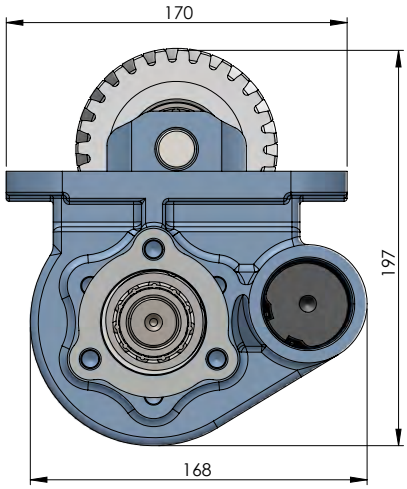


| CODE<br>KOD | TYPE<br>TİP (A) | MOUNTING TYPE<br>BAĞLANTI TİPİ (B) | MOUNTING SIDE<br>BAĞLANTI | TORQUE<br>TORK<br>(Kgm / Nm) | POWER<br>GÜÇ<br>(Hp / Kw) | SPEED<br>DEVİR<br>(RPM) | RATIO<br>ORAN |
|---|---|---|---|---|---|---|---|
| 51011512P0 | PNEUMATIC<br>PNÖMATİK | UNI | SIDE<br>YAN | 20,7 Kgm<br>203 Nm | 26,5 Hp<br>19,8 KW | 1000 RPM | 1.1,28 |
| 51011522P0 | | ISO ADAPTER<br>ADAPTÖRLÜ ISO | | | | | |
| 51011532P0 | | FLANGE<br>FLANŞLI | | | | | |
| 51011542P0 | | SHAFT<br>ŞAFTLI | | | | | |

| GEARBOX / ANA ŞANZIMANLAR | USED VEHICLES / KULLANILAN BAZI ARAÇLAR |
|---|---|
| TURNER-SPICER-T5A 2801-2803-2811-3016-3017-3047-3058-3068-3158R (1000 RPM, SAĞ) | 1340-1840 BMC-140 BMC-AS600-BEDFORD-1210-1212-1312 FORD / 66-83/FREIGHTER 302 LEYLAND |



Seçeceğiniz pompanın dönüş yönü, P.T.O. dönüş yönü ile ters olmalıdır.
The rotation of the choosen pump has to be opposite with the rotation of P.T.O.

P.T.O. montaj edildikten sonra ana şanzıman yağını tamamlayın.
Fill the oil of the gear box after mounting the P.T.O.

# TURNER T5C4060 DOUBLE GEAR UNI

## TURNER T5C4060 AKTARMALI UNI



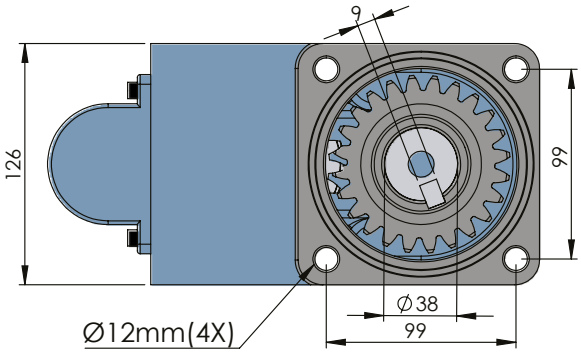


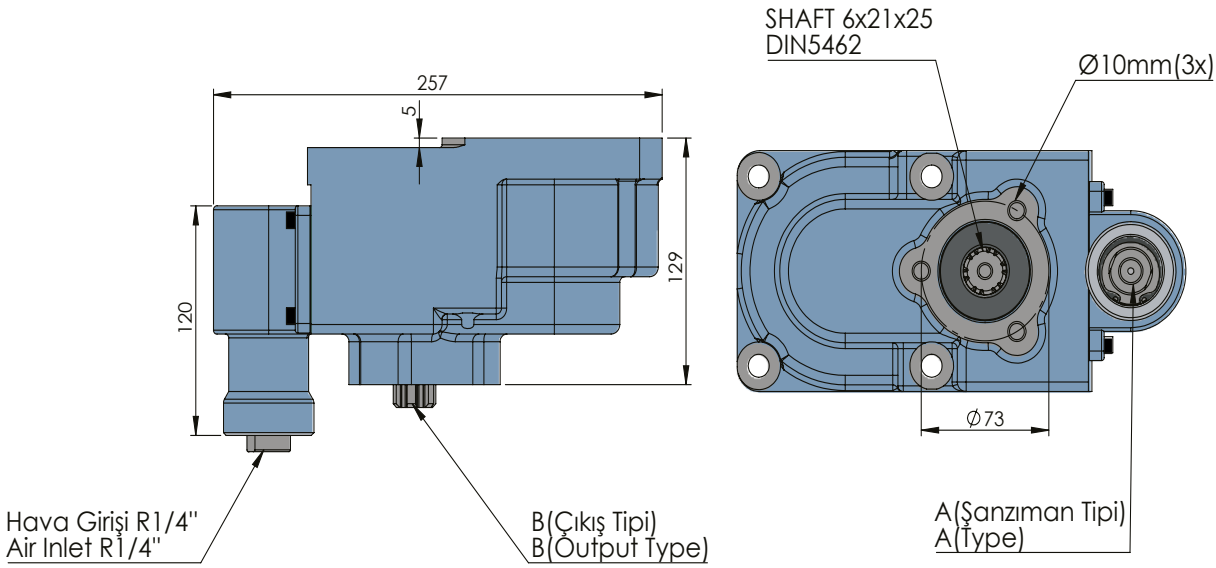


| CODE<br>KOD | TYPE<br>TİP (A) | MOUNTING TYPE<br>BAĞLANTI TİPİ (B) | MOUNTING SIDE<br>BAĞLANTI | TORQUE<br>TORK<br>(Kgm / Nm) | POWER<br>GÜÇ<br>(Hp / Kw) | SPEED<br>DEVİR<br>(RPM) | RATIO<br>ORAN |
|---|---|---|---|---|---|---|---|
| 51012311P0 | PNEUMATIC<br>PNÖMATİK | UNI | REAR<br>KUYRUK | 24,9 Kgm<br>244,2Nm | 23,9 Hp<br>17,8 KW | 500 RPM | 1.1,2 |
| 51012321P0 | | ISO ADAPTER<br>ADAPTÖRLÜ ISO | | | | | |
| 51012331P0 | | FLANGE<br>FLANŞLI | | | | | |
| 51012341P0 | | SHAFT<br>ŞAFTLI | | | | | |

| GEARBOX / ANA ŞANZIMANLAR | USED VEHICLES / KULLANILAN BAZI ARAÇLAR |
|---|---|
| TURNER-SPICER T5 C 4001-4058-4060-4068-4084 R-L | 162.22-162.25-170.25 FATİH / YAVUZ 1850-2200 / 700-800-900 DODGE / SÜPER 900 DODGE / 1210 FORD |



Seçeceğiniz pompanın dönüş yönü, P.T.O. dönüş yönü ile ters olmalıdır.
The rotation of the choosen pump has to be opposite to the rotation of P.T.O.

P.T.O. montaj edildikten sonra ana şanzıman yağını tamamlayın.
Fill the oil of the gear box after mounting the P.T.O.

# TURNER T5C4060 SIDE UNI

## TURNER T5C4060 YAN UNI

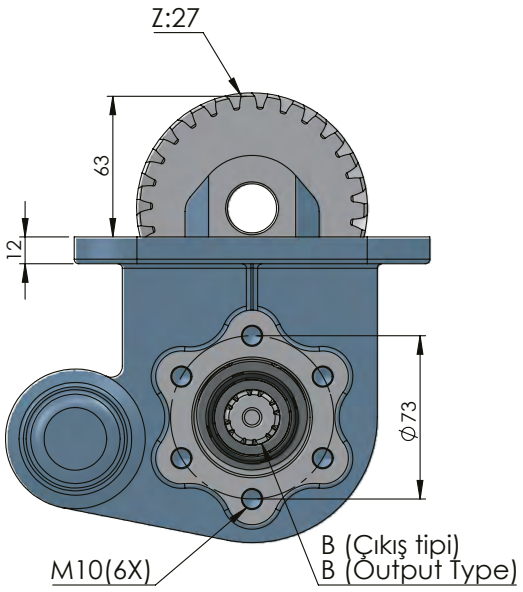




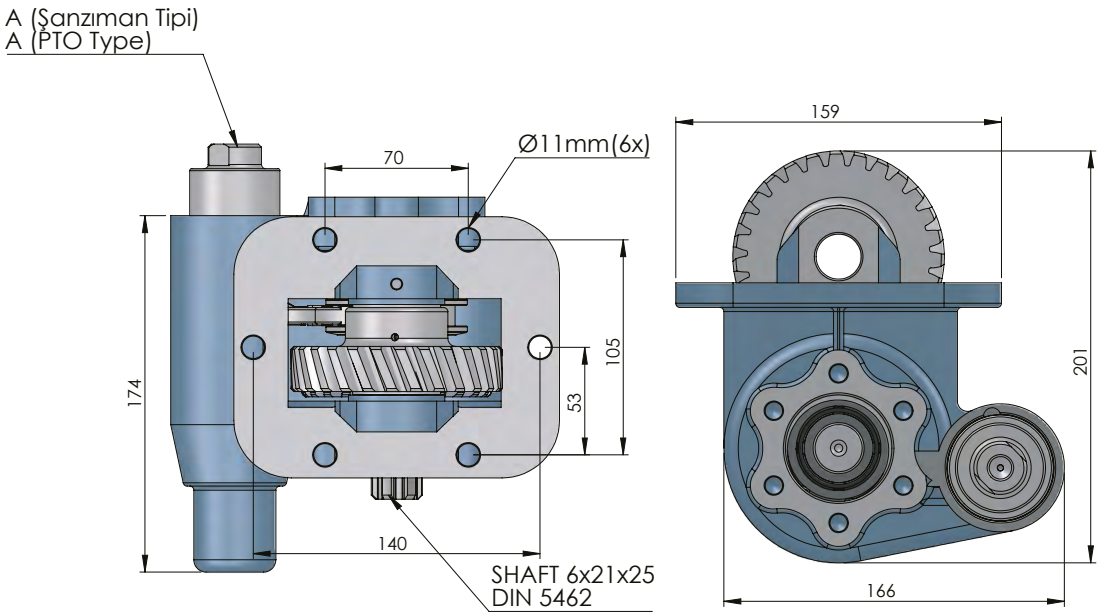


| CODE<br>KOD | TYPE<br>TİP (A) | MOUNTING TYPE<br>BAĞLANTI TİPİ (B) | MOUNTING SIDE<br>BAĞLANTI | TORQUE<br>TORK<br>(Kgm / Nm) | POWER<br>GÜÇ<br>(Hp / Kw) | SPEED<br>DEVİR<br>(RPM) | RATIO<br>ORAN |
|---|---|---|---|---|---|---|---|
| 51013511P0 | PNEUMATIC<br>PNÖMATİK | UNI | SIDE<br>YAN | 34 Kgm<br>333,4 Nm | 24,5 Hp<br>18,3 KW | 500 RPM | 1:1 |
| 51013521P0 | | ISO ADAPTER<br>ADAPTÖRLÜ ISO | | | | | |
| 51013531P0 | | FLANGE<br>FLANŞLI | | | | | |
| 51013541P0 | | SHAFT<br>ŞAFTLI | | | | | |

| GEARBOX / ANA ŞANZIMANLAR | USED VEHICLES / KULLANILAN BAZI ARAÇLAR |
|---|---|
| TURNER-SPICER T5 C 4001-4058-4060-4068-4084 R-L | 162.22-162.25-170.25 FATİH / YAVUZ 1850-2200 / 700-800-900 DODGE / SÜPER 900 DODGE / 1210 FORD |

Seçeceğiniz pompanın dönüş yönü, P.T.O. dönüş yönü ile ters olmalıdır.
The rotation of the choosen pump has to be opposite with the rotation of P.T.O.

P.T.O. montaj edildikten sonra ana şanzıman yağını tamamlayın.
Fill the oil of the gear box after mounting the P.T.O.

# NISSAN MES 50B



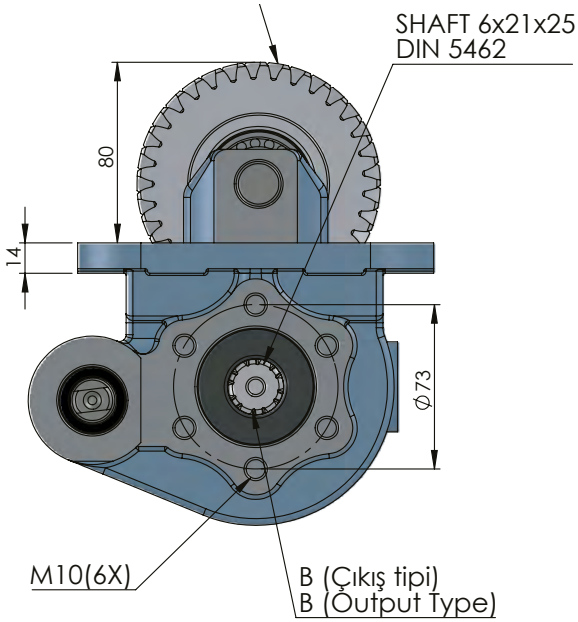


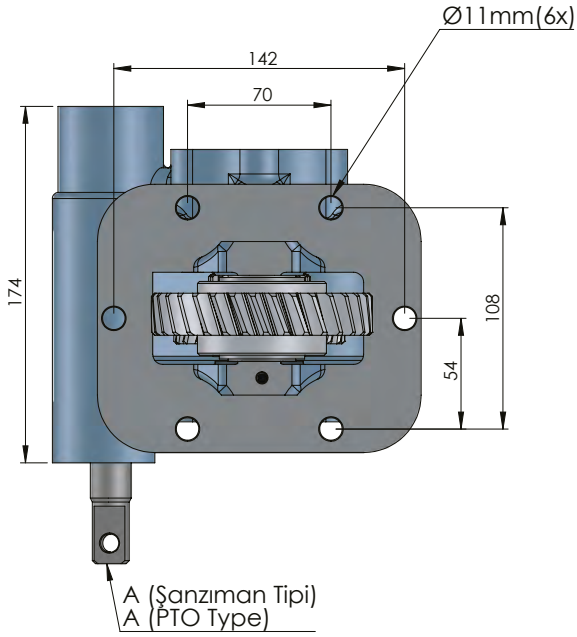


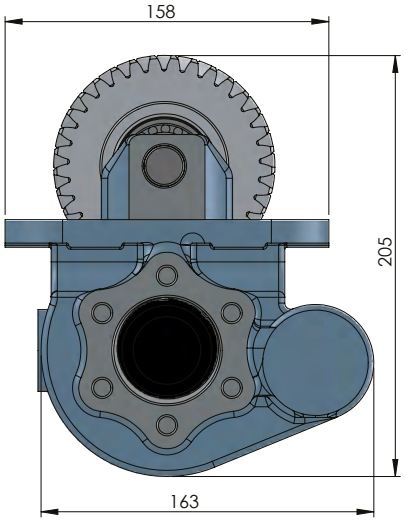


| CODE<br>KOD | TYPE<br>TİP (A) | MOUNTING TYPE<br>BAĞLANTI TİPİ (B) | MOUNTING SIDE<br>BAĞLANTI | TORQUE<br>TORK<br>(Kgm / Nm) | POWER<br>GÜÇ<br>(Hp / Kw) | SPEED<br>DEVİR<br>(RPM) | RATIO<br>ORAN |
|---|---|---|---|---|---|---|---|
| 51717512M0 | MECHANIC<br>MEKANİK | UNİ | SIDE<br>YAN | 22 Kgm<br>215 Nm | 32 Hp<br>24 Kw | 750 | 1:1,37 |
| 51717522M0 | | ISO ADAPTER<br>ADAPTÖRLÜ ISO | | | | | |
| 51717532M0 | | FLANGE<br>FLANŞLI | | | | | |
| 51717542M0 | | SHAFT<br>ŞAFTLI | | | | | |
| 51717512P0 | PNEUMATIC<br>PNÖMATİK | UNİ | | | | | |
| 51717522P0 | | ISO ADAPTER<br>ADAPTÖRLÜ ISO | | | | | |
| 51717532P0 | | FLANGE<br>FLANŞLI | | | | | |
| 51717542P0 | | SHAFT<br>ŞAFTLI | | | | | |

| GEARBOX / ANA ŞANZIMANLAR | USED VEHICLES / KULLANILAN BAZI ARAÇLAR |
|---|---|
| MES 50B / MES 50 | NISSAN NU&YU 41 |

Seçeceğiniz pompanın dönüş yönü, P.T.O. dönüş yönü ile ters olmalıdır.
The rotation of the choosen pump has to be opposite to the rotation of P.T.O.

P.T.O. montaj edildikten sonra ana şanzıman yağını tamamlayın.
Fill the oil of the gear box after mounting the P.T.O.

# NISSAN UD 60

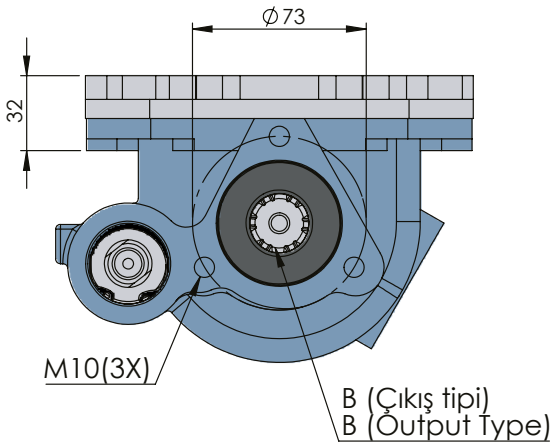




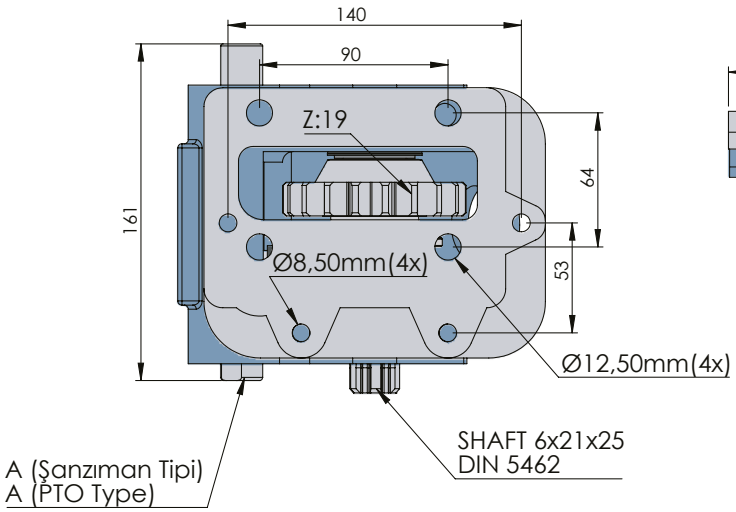


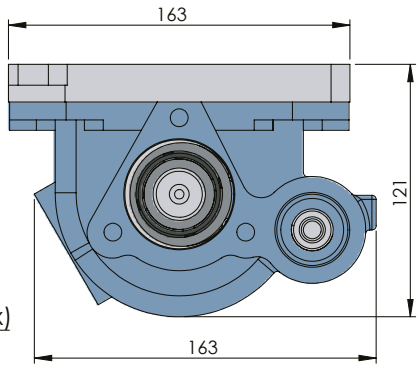


| CODE<br>KOD | TYPE<br>TİP (A) | MOUNTING TYPE<br>BAĞLANTI TİPİ (B) | MOUNTING SIDE<br>BAĞLANTI | TORQUE<br>TORK<br>(Kgm / Nm) | POWER<br>GÜÇ<br>(Hp / Kw) | SPEED<br>DEVİR<br>(RPM) | RATIO<br>ORAN |
|---|---|---|---|---|---|---|---|
| 51712512P0 | PNEUMATIC<br>PNÖMATİK | UNI | SIDE<br>YAN | 25 Kgm<br>245 Nm | 34 Hp<br>26 Kw | 750 | 1:1 |
| 51712522P0 | | ISO ADAPTER<br>ADAPTÖRLÜ ISO | | | | | |
| 51712532P0 | | FLANGE<br>FLANŞLI | | | | | |
| 51712542P0 | | SHAFT<br>ŞAFTLI | | | | | |

| GEARBOX / ANA ŞANZIMANLAR | USED VEHICLES / KULLANILAN BAZI ARAÇLAR |
|---|---|
| MHS 50 T / MHS 60 A-61 A / TMH 701-702-711-712-761 (7.137) LC 6 T 46 | NISSAN UD60, BMC 415 NISSAN / ISUZU / JAC 1063 / BMC 415 / DONGFENG / FOTON BJ 1069 / NPR NQR MK 1800CS ISUZU |



Seçeceğiniz pompanın dönüş yönü, P.T.O. dönüş yönü ile ters olmalıdır.
The rotation of the choosen pump has to be opposite with the rotation of P.T.O.

P.T.O. montaj edildikten sonra ana şanzıman yağını tamamlayın.
Fill the oil of the gear box after mounting the P.T.O.

# NISSAN UD 70-90



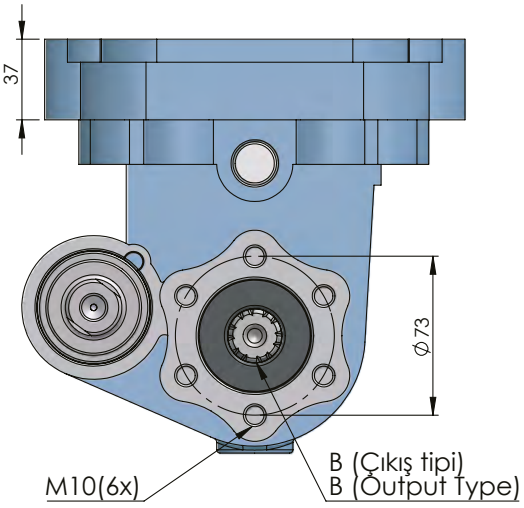


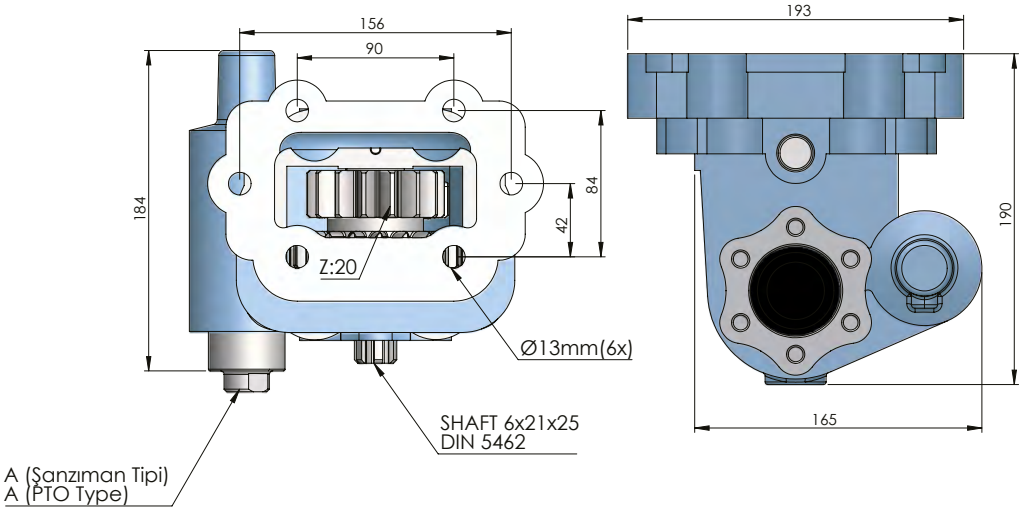


| CODE<br>KOD | TYPE<br>TİP (A) | MOUNTING TYPE<br>BAĞLANTI TİPİ (B) | MOUNTING SIDE<br>BAĞLANTI | TORQUE<br>TORK<br>(Kgm / Nm) | POWER<br>GÜÇ<br>(Hp / Kw) | SPEED<br>DEVİR<br>(RPM) | RATIO<br>ORAN |
|---|---|---|---|---|---|---|---|
| 51711512P0 | PNEUMATIC<br>PNÖMATİK | UNI | SIDE<br>YAN | 48 Kgm<br>475 Nm | 34,5 Hp<br>25,7 Kw | 550 RPM | 1:1,07 |
| 51711522P0 | | ISO ADAPTER<br>ADAPTÖRLÜ ISO | | | | | |
| 51711532P0 | | FLANGE<br>FLANŞLI | | | | | |
| 51711542P0 | | SHAFT<br>ŞAFTLI | | | | | |

| GEARBOX / ANA ŞANZIMANLAR | USED VEHICLES / KULLANILAN BAZI ARAÇLAR |
|---|---|
| MLS 61 A - B / MLS 62 A / MLS 62 B / MLS 63 B (7,173-6,718) | NISSAN UD70-UD9 0NISSAN PKB214 4X2 / Nissan Diesel Motor Model FE6TA-21/NISSAN DIESEL CKA 87 H / MKD 210 / UD90 / NISSAN UD183HT PKB214/216 PKC211MHRN |



Seçeceğiniz pompanın dönüş yönü, P.T.O. dönüş yönü ile ters olmalıdır.
The rotation of the choosen pump has to be opposite to the rotation of P.T.O.

P.T.O. montaj edildikten sonra ana şanzıman yağını tamamlayın.
Fill the oil of the gear box after mounting the P.T.O.

# NISSAN UD 95

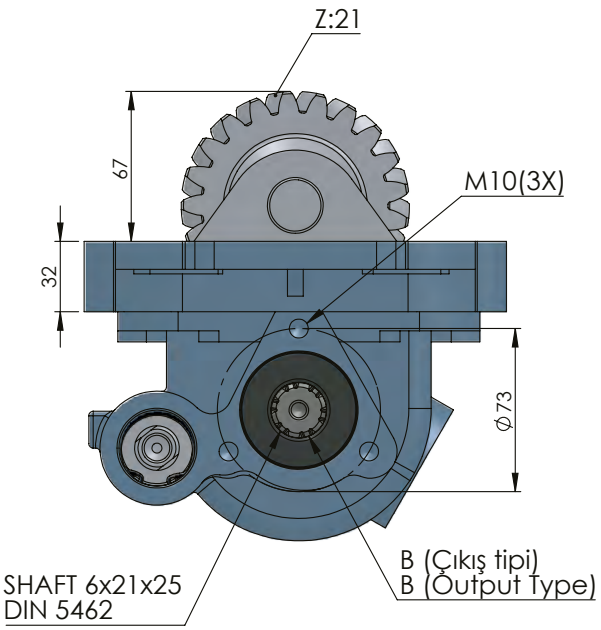




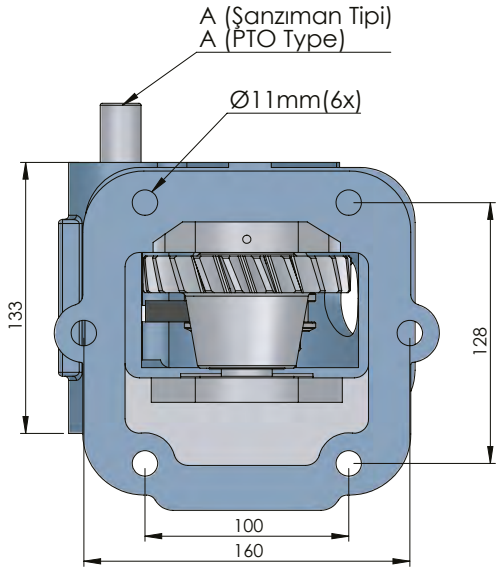


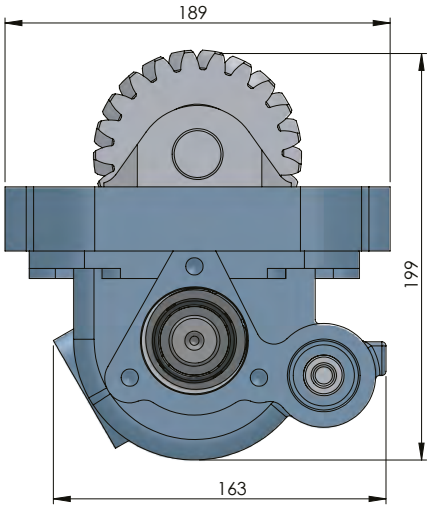


| CODE<br>KOD | TYPE<br>TİP (A) | MOUNTING TYPE<br>BAĞLANTI TİPİ (B) | MOUNTING SIDE<br>BAĞLANTI | TORQUE<br>TORK<br>(Kgm / Nm) | POWER<br>GÜÇ<br>(Hp / Kw) | SPEED<br>DEVİR<br>(RPM) | RATIO<br>ORAN |
|---|---|---|---|---|---|---|---|
| 51713512P0 | PNEUMATIC<br>PNÖMATİK | UNI | SIDE<br>YAN | 27 Kgm<br>264 Nm | 37 Hp<br>28 Kw | 650 RPM | 1:1,05 |
| 51713522P0 | | ISO ADAPTER<br>ADAPTÖRLÜ ISO | | | | | |
| 51713532P0 | | FLANGE<br>FLANŞLI | | | | | |
| 51713542P0 | | SHAFT<br>ŞAFTLI | | | | | |

| GEARBOX / ANA ŞANZIMANLAR | USED VEHICLES / KULLANILAN BAZI ARAÇLAR |
|---|---|
| NISSAN | NISSAN UD95 |

Seçeceğiniz pompanın dönüş yönü, P.T.O. dönüş yönü ile ters olmalıdır.
The rotation of the choosen pump has to be opposite with the rotation of P.T.O.

P.T.O. montaj edildikten sonra ana şanzıman yağını tamamlayın.
Fill the oil of the gear box after mounting the P.T.O.

# PTO MECHANICAL LEVER CONTROL

## GEMMA PTO MECHANICAL LEVER CONTROL



| Product Code | Product Description |
|---|---|
| 36003502 | 2,5 m PTO Mechanical Cable |
| 36003503 | 3 m PTO Mechanical Cable |
| 36003501 | 3,5 m PTO Mechanical Cable |
| 36004001 | 4 m PTO Mechanical Cable |
| 36004501 | 4,5 m PTO Mechanical Cable |
| 36005001 | 5 m PTO Mechanical Cable |

*We can produce any lenght according to your order

# HYDRAULIC EQUIPMENTS
HİDROLİK EKİPMANLAR


185 CARDAN SHAFTS
KARDAN MİLLERİ

201 VALVES
VENTİLLER

205 ADAPTERS
ADAPTÖRLER



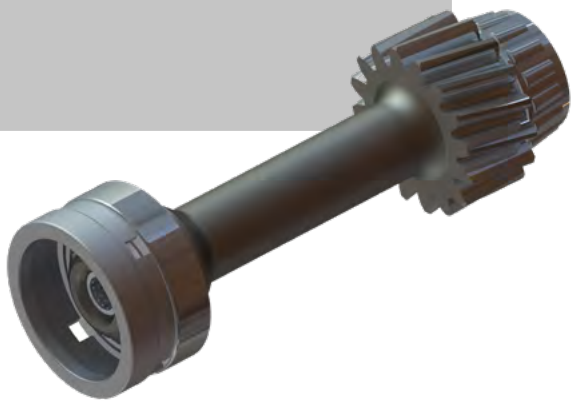



# ZF 9S 75

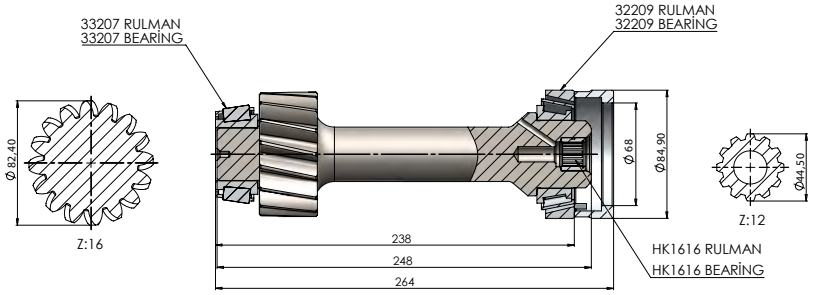




60200975

| GEARBOX<br>ANA ŞANZIMANLAR | USED VEHICLES<br>KULLANILAN BAZI ARAÇLAR |
|---|---|
| 9S-75 / 13.16 / 9.56, 6S1005TO / 6.75 - 0.78 | 2521-2524-3224 MERCEDES / 617-620-622-625-822 BMC PRO / 1824-2524-2524D -2534 FORD CARGO19.260-26.260-26.265-32.260 FARGO / 55.150-55.180-55.210-55.230 DAF / 823-923 MERCEDES/ VOLVO FL6 817-917-823-923-1217-1317-1517-1323 LEICHT ATEGO / 1826-2526 FORD / 522 PRO BMC150E18-160E22-180E25 IVECO / AMW INDIA 4923 TR-2523 TP / ISUZU FVZ FVZ33MZ2E NZ2E |

# ZF 9S 109 (12.91)

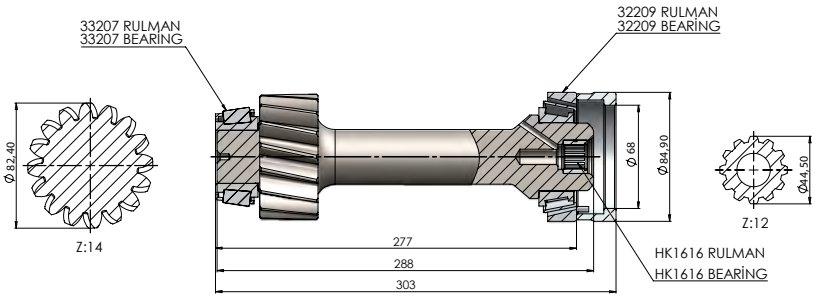




60201291

| GEARBOX<br>ANA ŞANZIMANLAR | USED VEHICLES<br>KULLANILAN BAZI ARAÇLAR |
|---|---|
| 16S-109/13.31, 9S-109/12.91, 9S-1110TD/12.73, 9S-1110TO/9.48-0.75 (VOLVO ZTO 1109),<br>9S-1310TO/9.48, 9S-1315TO / 9.48 | 32.270 MAN / 827-832 BMC PRO / 270-26 FATİH / 3226-3227C-3227S-2527-3530 FORD CARGO 1830-1832-1838-2530-3230C-3230S-3240-4030-4050 FORD CARGO / BMC 270-280 / 19.360MAN / 935 PRO 3232S-2532 FORD / RENAULT 280 / ASHOK LEYLAND TAURUS 2516-1613-2523- 3123-3132 / VOLVO AMW INDIA 2518-2523 / MAN INDIA CLA 16.180-25.180-25.220-25.280-31.280 -40.280-49.280 / ISUZU FXZ 77 HINO FL8JNLA / FM8JKKA / FM1AKKA / KLA /FM2AKLA / ISUZU FVM 300 34QSH TSH FVZ 34PNDH STH HINO FL8JNLA / FM8JKKA /FM8JNKD / FM1AKKA / AKLA / ANKD / ANLD / FM2PNLD / PKLD / ISUZU FXZ 360KAMA3-53605 (4x2) / KAMA3-65111 (6x6) / KAMA3-65115 (6x4) / KAMA3-65117 (6x4) / 18.290 MAN KAMAZ / KAMA3 65115-65116- 65117-53605-5308-4326-43114-43118-55111-43253 45141-53605-6540IVECO TECTOR 170E28S -170E28T-240E28S 6X2-240E28S STRADALE 6X2 / HINO FM2AKLA / MAN 26.290 |

# ZF 9S 109 (12.92)



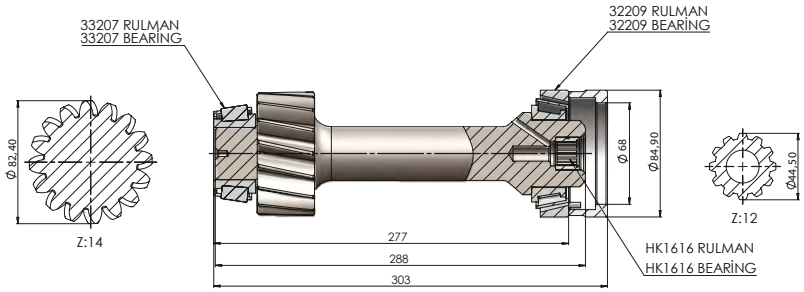


**60201292**

| GEARBOX<br>ANA ŞANZIMANLAR | USED VEHICLES<br>KULLANILAN BAZI ARAÇLAR |
|---|---|
| 9S-109/12.92; 9S-109/13.04; 16S-109/13.30; 16S-109/13.42 | 17.192-17.232-18.220-19.270-25.270-26.230-26.270 MAN /1827-2527-2626 FORD CARGO / 75.270-75.300 DAF / LEYLAND DAF / S18-S21-S24-S28-S29-S31 STEYR / BMC 270 |

# ZF 16S 109 (13.53)



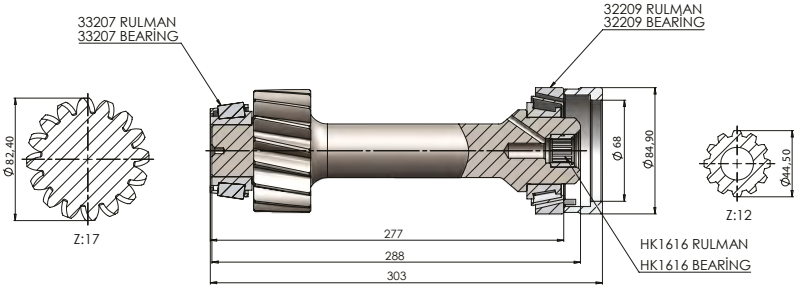


**60201353**

| GEARBOX<br>ANA ŞANZIMANLAR | USED VEHICLES<br>KULLANILAN BAZI ARAÇLAR |
|---|---|
| 9S-109/10.24; 9S-109/10.25; 6S-109/11.86; 16S-109/13.53 | 17.232-19.230-19.340-26.342 MAN / 3226-2530 FORD CARGO / RENAULT PREMIUM 300-320.32-370 AS 19.300-26.300-32.300-38.300 HI-EX FARGO ASKAM / ISUZU FTR 800-FVR 900-FTM 1200- FVZ 1700 75.330 DAF / STEYR / ISUZU FVM 23-FVZ 23-FVR 23-GXZ 270-GXZ 320-GXZ23KZ2EFZF2E- KZH2E-KZHF2EHINO FM2PMPD PKPA / HINO 500 SERIES SG2PDPA EURO 2 |

# ZF 12AS 1210

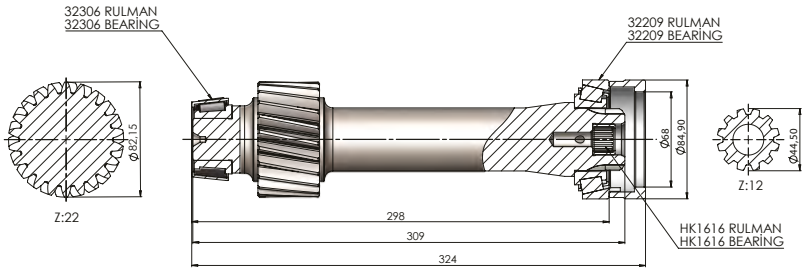




60201210

| GEARBOX<br>ANA ŞANZIMANLAR | USED VEHICLES<br>KULLANILAN BAZI ARAÇLAR |
|---|---|
| 12AS-1010TO, 12AS-1210TO | MAN TGA 26280 2012 MODEL / MAN TGM 18.330 4x4 BB / MAN 18.290 4x4 / MAN TGM 18.340 4x2 LL-MAN TGM 15.290 4x2 BL / MAN TGL 12.250 4x2 BL / TGM 18.240-18.280-18.330 MAN |

# ZF 12AS 1420

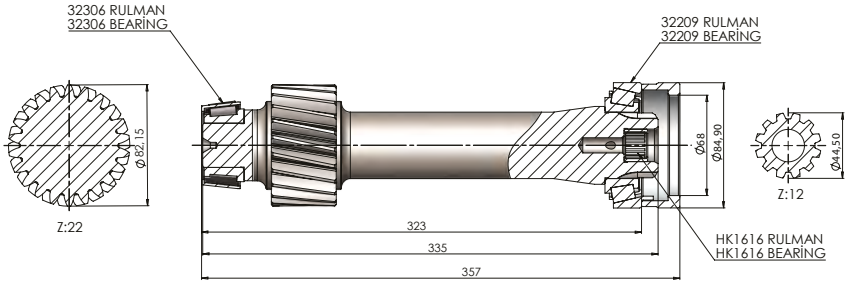




60201420

| GEARBOX<br>ANA ŞANZIMANLAR | USED VEHICLES<br>KULLANILAN BAZI ARAÇLAR |
|---|---|
| 12AS-1010TO, 12AS-1210TO | MAN TGA 26280 2012 MODEL / MAN TGM 18.330 4x4 BB / MAN 18.290 4x4 / MAN TGM 18.340 4x2 LL-MAN TGM 15.290 4x2 BL / MAN TGL 12.250 4x2 BL / TGM 18.240-18.280-18.330 MAN |

# ZF 16S 130



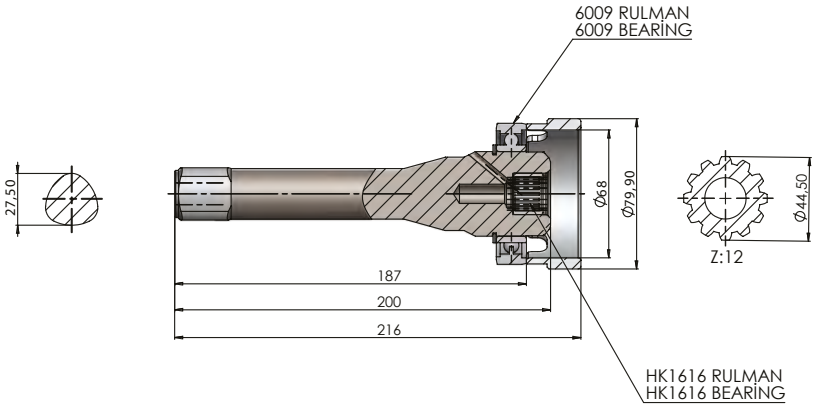


**60216130**

| GEARBOX<br>ANA ŞANZIMANLAR | USED VEHICLES<br>KULLANILAN BAZI ARAÇLAR |
|---|---|
| 16S-130-Trilobe, 16S-130/11.46, 16S-130/11.74, 16S-130/13.68, 16S-130/13.80, 16S-130/14.14,<br>16S-130/14.29, 16S-130/16.47, 16S-130/17.06, 16S-130/17.47 | 16.281-19.280-19.422-25.372(SILENT)-26.280-26.281-26.231-26.321-32.281-32.365-33.28119.422(SILENT)MAN/<br>1935-2228-2433-2624-2628-2633-3828-4028 MERCEDES DAF 33.300-95.330-95.400 / 26.35 MERCEDES SAURER |

# ZF 16S 160



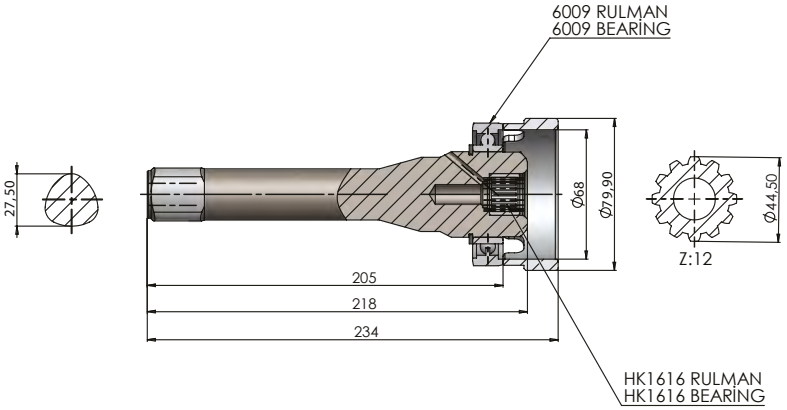


**60216160**

| GEARBOX<br>ANA ŞANZIMANLAR | USED VEHICLES<br>KULLANILAN BAZI ARAÇLAR |
|---|---|
| 16S-220/13.80IT, 16S-190A/11.74, 16S-190A/17.47, 16S-220A/14.14, 16S-160/11.46, 16S-160/<br>13.68, 16S-160/14.29, 16S-160/17.06 | 16.281-19.280-19.422-25.372(SILENT)-26.280-26.281-26.231-26.321-32.281-32.365-33.281<br>19.422(SILENT)MAN/1935-2228-2433-2624-2628-2633-3828-4028 MERCEDES<br>DAF 33.300-95.330-95.400 / 26.35 MERCEDES SAURER |

# ZF 16S 220



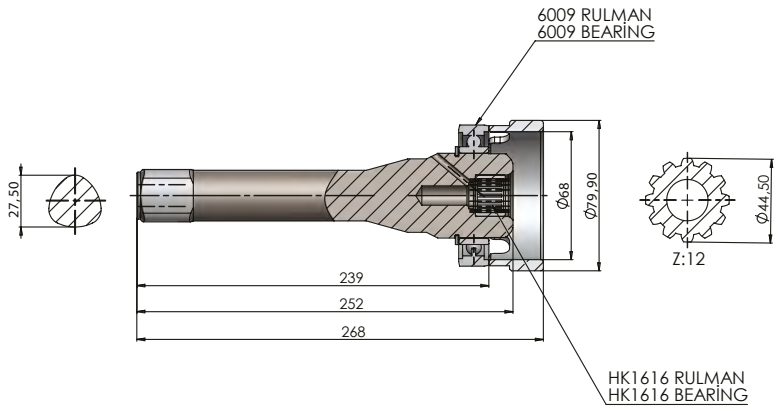


**60216220**

| GEARBOX<br>ANA ŞANZIMANLAR | USED VEHICLES<br>KULLANILAN BAZI ARAÇLAR |
|---|---|
| ZF ŞANZIMAN | ZF ŞANZIMAN |

# ZF TGA INTARDER WITH PLATE 250mm

## ZF TGA İNTARDER PLATELİ 250mm

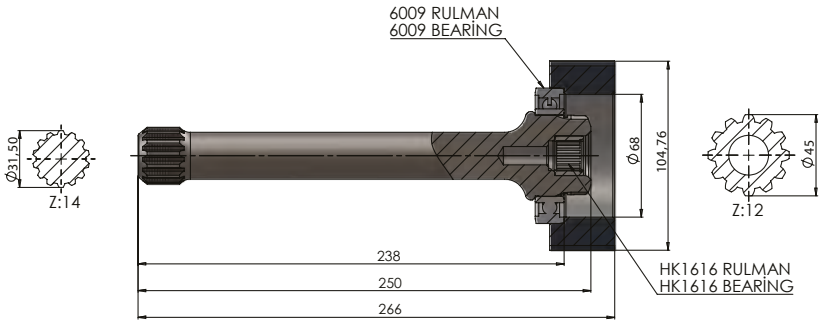




60216250

| GEARBOX<br>ANA ŞANZIMANLAR | USED VEHICLES<br>KULLANILAN BAZI ARAÇLAR |
|---|---|
| 16S-1621 TD/ 1921 TD / 2221 TD/ 2321 TD /2331 TD (+IT) /16S-1821 TO/ 2221 TO / 2521<br>TO/ 2721 TO /2731 TO (+IT) /16S-151/181/221 (+IT) /12S-2101TD/2301TD/2801TD (+IT3) | 14.463-39.390 MAN TGA-TGA 18.460A-19.430 MAN EUROPE 6X4 / 3300 DAF-85.330 DAF / RENAULT PREMIUM 440 DXI / IVECO 480 STRALIS |

# ZF TGA INTARDER WITH PLATE 287mm

## ZF TGA İNTARDER PLATELİ 287mm

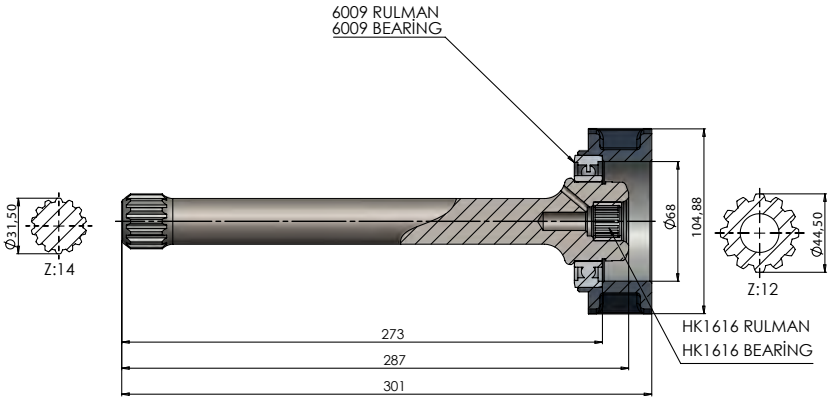




60216280

| GEARBOX<br>ANA ŞANZIMANLAR | USED VEHICLES<br>KULLANILAN BAZI ARAÇLAR |
|---|---|
| 16S-1621 TD/ 1921 TD / 2221 TD/ 2321 TD /2331 TD (+IT) /16S-1821 TO/ 2221 TO / 2521<br>TO/ 2721 TO /2731 TO (+IT) /16S-151/181/221 (+IT) /12S-2101TD/2301TD/2801TD (+IT3) | 14.463-39.390 MAN TGA-TGA 18.460A-19.430 MAN EUROPE 6X4 / 3300 DAF-85.330 DAF / RENAULT PREMIUM 440 DXI / IVECO 480 STRALIS |

# ZF ASTRONIC LONG WITH PLATE 287mm

## ZF ASTRONİK UZUN PLATELİ 287mm



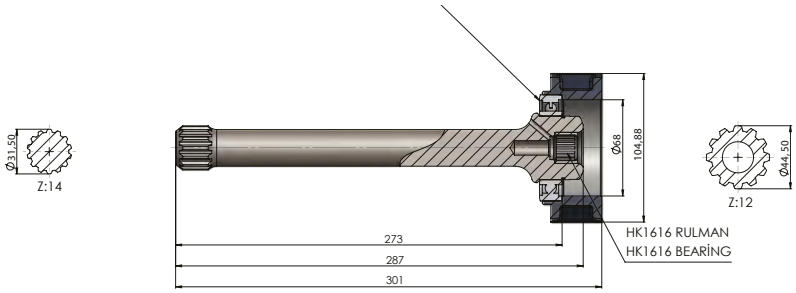


**60218280**

| GEARBOX<br>ANA ŞANZIMANLAR | USED VEHICLES<br>KULLANILAN BAZI ARAÇLAR |
|---|---|
| ZF AS TRONIC 16 AS 251 / 16 S 251+PLATE 12 AS 1631/12 AS 1931TD/12 AS 2131TD/ 12 AS 2141TD/12 AS 2300 IT/12 AS 2301IT/12 AS 2331 TO/12 AS 2341/12 AS 2501 IT/ 12 AS 2531 TO/12 AS 2541/12 AS 2741 TO /12 AS 2941/ 12 AS 3001 IT/12 AS 3002 IT/ 12 AS 3141 TO/16 AS 2231/16 AS 2600 IT/16 AS 2601 IT / 16 AS 2631 IT (INTARDER ) | TG-A 18.460A -19.430 MAN EUROPE 6X4 / 3300 DAF- 85.330 CF DAF /14.463 MAN / IVECO 480 STRALIS /39.390 MAN TGA |

# ZF ASTRONIC LONG WITH PLATE 300mm

## ZF ASTRONİK UZUN PLATELİ 300mm

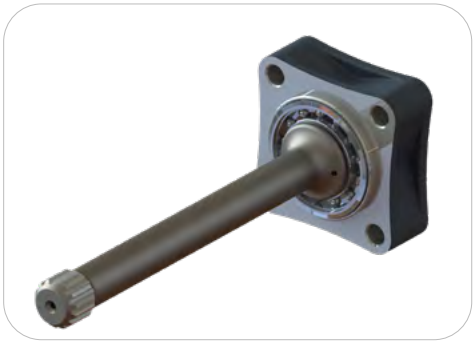

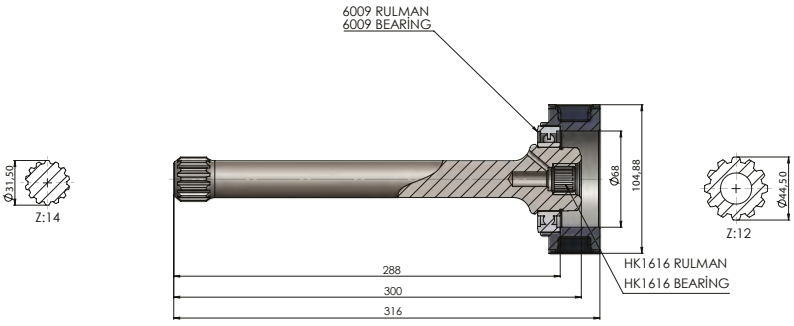


**60218300**

| GEARBOX<br>ANA ŞANZIMANLAR | USED VEHICLES<br>KULLANILAN BAZI ARAÇLAR |
|---|---|
| ZF AS TRONIC 16 AS 251 / 16 S 251+PLATE 12 AS 1631/12 AS 1931TD/12 AS 2131TD/ 12 AS 2141TD/12 AS 2300 IT/12 AS 2301IT/12 AS 2331 TO/12 AS 2341/12 AS 2501 IT/ 12 AS 2531 TO/12 AS 2541/12 AS 2741 TO /12 AS 2941/ 12 AS 3001 IT/12 AS 3002 IT/ 12 AS 3141 TO/16 AS 2231/16 AS 2600 IT/16 AS 2601 IT / 16 AS 2631 IT (INTARDER ) | TG-A 18.460A -19.430 MAN EUROPE 6X4 / 3300 DAF- 85.330 CF DAF /14.463 MAN / IVECO 480 STRALIS /39.390 MAN TGA |

# ZF ASTRONIC SHORT WITHOUT PLATE 250mm

## ZF ASTRONİK KISA PLATESİZ 250mm

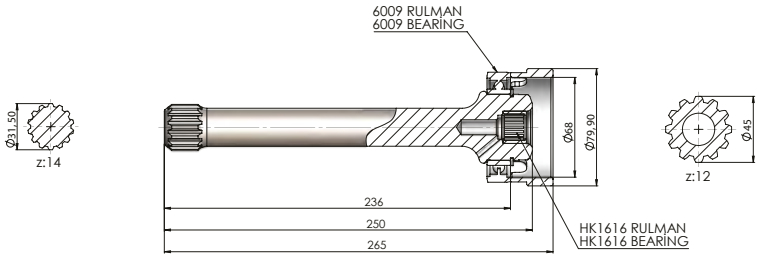




60218230

| GEARBOX<br>ANA ŞANZIMANLAR | USED VEHICLES<br>KULLANILAN BAZI ARAÇLAR |
|---|---|
| ZF AS TRONIC 16 AS 251 / 16 S 251+PLATE 12 AS 1631/12 AS 1931TD/12 AS 2131TD/ 12 AS 2141TD/12 AS 2300 IT/12 AS 2301IT/12 AS 2331 TO/12 AS 2341/12 AS 2501 IT/ 12 AS 2531 TO/12 AS 2541/12 AS 2741 TO /12 AS 2941/ 12 AS 3001 IT/12 AS 3002 IT/ 12 AS 3141 TO/16 AS 2231/16 AS 2600 IT/16 AS 2601 IT / 16 AS 2631 IT (INTARDER ) | TG-A 18.460A -19.430 MAN EUROPE 6X4 / 3300 DAF- 85.330 CF DAF /14.463 MAN / IVECO 480 STRALIS /39.390 MAN TGA |

# ZF 16 AS-151

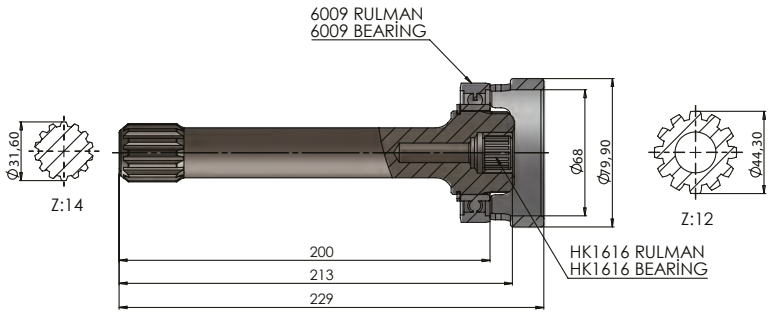




60216151

| GEARBOX<br>ANA ŞANZIMANLAR | USED VEHICLES<br>KULLANILAN BAZI ARAÇLAR |
|---|---|
| 16S-181/13.85IT, 16S-181/16.53IT, 16S-221/13.85IT, 16S 221/16.53IT, 16S-151/13.85-0.84, 16S-151 /16.53-1.0, 12S-2100TD / 15.57-1.0, 12S-2300TD / 15.57-1.0, 12S-2800TD 15.57-1.0, 16S-1620TD/16.41-1.0, 16S-1820TO/13.80-0.84, 16S-1920TD/16.41-1.0, 16S-2220TD/16.41-1.0, 16S-2220TO/13.80-0.84, 16S-2320TD/16.41-1.0, 16S-2330TD/16.41-1.0, 16S-2520TO/13.80-0.84,16S-2720TO/13.80-0.84,16S-2730TO/13.80-0.84, 8S-151 / 13.79, 8S-1620TD / 13.80-1.0, 8S-1820TO / 11.54-0.84, 8S-220TO /11.54 – 0.84, 12S-2330TD / 15.57-1.0, 12S-2130TD / 15.57-1.0, 12S-2830TD / 15.57-1.0 | 17.322-19.422-423-464/26.310-372-373-422/32.310-33.372-33.423-40.423-41.423-40.463 MAN/STRALIS 430 IVECO 1142 BMC / 410 E 37 IVECO / HYUNDAI HD 600-HD 700-HD 1000 / 1835-3235 FORD / 19.400 TGA MAN FE420A/FE19.420/14.463 MAN/75.310-85.360-85.400-85.330-95.500 DAF / RENAULT PREMIUM 370.32-420 400-440-480 RENAULT KERAX / 85CF.340-95XF.430-95XF-380-95XF-480 DAF / 400E38 IVECO/ASTRA 6438 MAN TGX 18.440-26.440 /HYUNDAI HD 1000 / DAF CF 85.410-85.360 / KAMA3-6520-19 (6x4) KAMA3-6520-60 (6x4) /KAMA3-6520-61 (6x4) / KAMA3-65201-63 (8x4) / KAMA3-65201 (8x4) / KAMAZ 6522KAMA3-65225 (6x6) / KAMA3-65225 (6x6) |

# ZF 5S 111

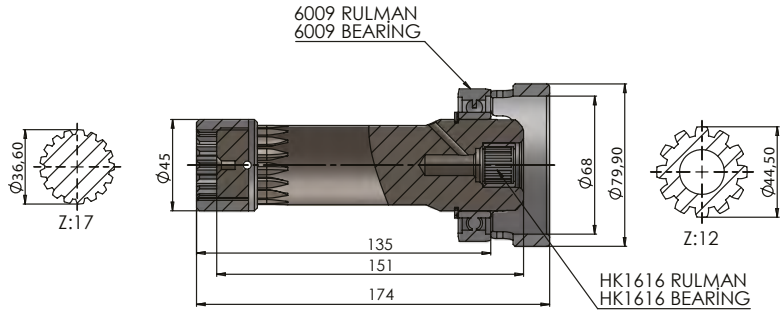




60215111

| GEARBOX<br>ANA ŞANZIMANLAR | USED VEHICLES<br>KULLANILAN BAZI ARAÇLAR |
|---|---|
| ZF ŞANZIMAN | ZF ŞANZIMAN |

# ZF TGA AUTOMATIC SHORT WITH PLATE 250mm

## ZF TGA OTOMATİK KISA PLATELİ 250mm



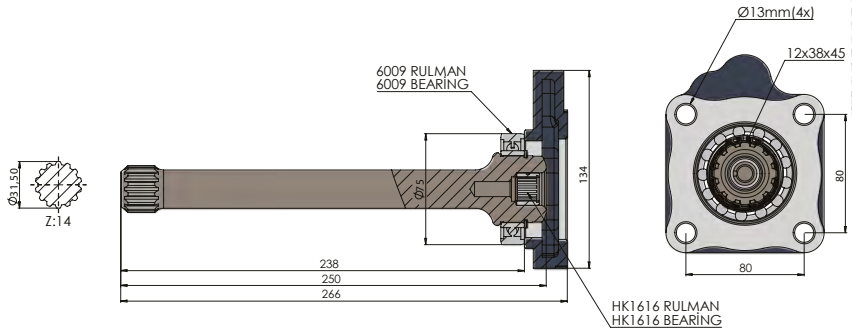


**60216255**

| GEARBOX<br>ANA ŞANZIMANLAR | USED VEHICLES<br>KULLANILAN BAZI ARAÇLAR |
|---|---|
| ZF ŞANZIMAN | ZF ŞANZIMAN |

# ZF ASTRONIC AUTOMATIC WITH PLATE 287mm

## ZF ASTRONİK OTOMATİK PLATELİ 287mm

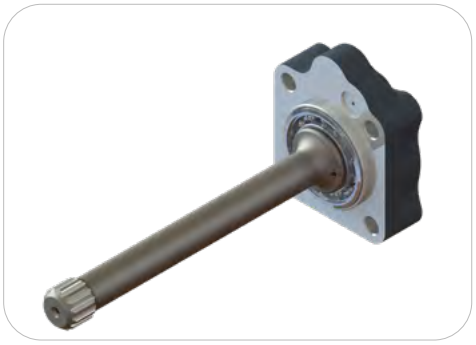

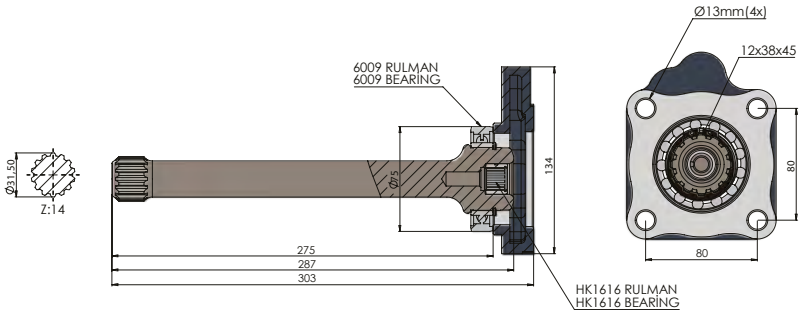


**60218286**

| GEARBOX<br>ANA ŞANZIMANLAR | USED VEHICLES<br>KULLANILAN BAZI ARAÇLAR |
|---|---|
| ZF ŞANZIMAN | ZF ŞANZIMAN |

# ZF ASTRONIC AUTOMATIC ORIGINAL WITH PLATE

## ZF ASTRONİK OTOMATİK ORJİNAL PLATELİ

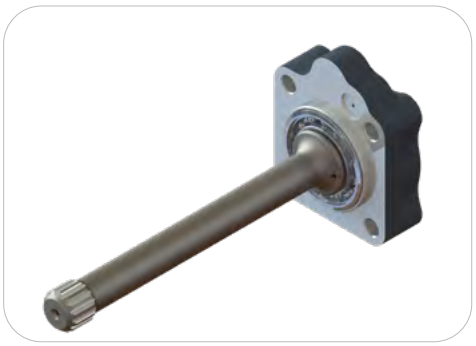

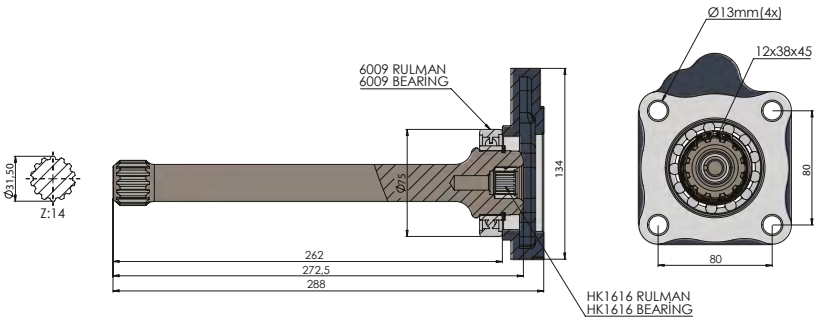


**60218289**

| GEARBOX<br>ANA ŞANZIMANLAR | USED VEHICLES<br>KULLANILAN BAZI ARAÇLAR |
|---|---|
| ZF ŞANZIMAN | ZF ŞANZIMAN |

# MERCEDES ACTROS 275mm

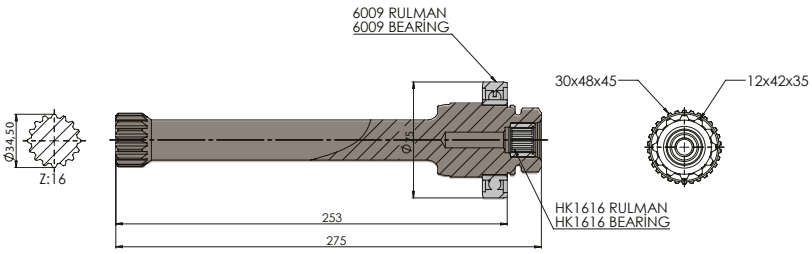




60121117

| GEARBOX<br>ANA ŞANZIMANLAR | USED VEHICLES<br>KULLANILAN BAZI ARAÇLAR |
|---|---|
| G 125-16 / G 135-16 / G 155-16 / G 180-16 / G 200-16 / G 210-16 / G 240-16 / G 255 / G 210-16 / G 211-16 / G 240 / G 260-16 (17,03) G 260-16 (11,9-15,9-14,2-11,7-9,75) / G 221 - 9 / 16,02 EPS (IdNr: 715561 Code: GD5) / G 181-9 (BRAZIL) / G 141-9 EURO 6 / G 131-9 (16,02-14,57) EPS (IdNr: 715570 Code: NC5) / G 231-16 / G 241 / G 281 / G 330-12 (11,63-16,17) | 1729-1735-1827-1834-1838-1929-1935-2038-2429-2435-2527-2531-2534-2629-2631-2635-2638 -3229-3234-3534-3535-1831-1835-1840-1844-1848-1850-1857-1934-1938-1953-2044-2050-2544-2550-2650-2643-2644-3031-3234-3331-3348 4148-3331-3335-3336-3340-3235-3340-2031-2040-2648-3548-3553-3557-3538-2641-3244 ACTROS 1628-1831-1833-1834-1835-1840-1841-1843-1846-1858-2040-2535-2540-2543-3028-3228-3235-3326-4040-4141-4148- 2640-3225-3235-3236-3240-3340-3344-4038-4041-4140-4143-4148-3240-4041-4148-2628-1824-4160AXOR Mercedes - Benz Atron 1635-2324-2729 Do Brazıl 2012 Blue Tec 5 BRAZIL Gearbox:<br>G 181-9 / SISU TRUCK AROCS 1842 |

# MERCEDES ACTROS 252mm

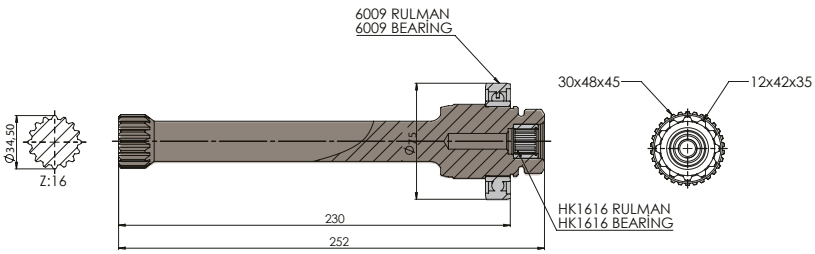




60121116

| GEARBOX<br>ANA ŞANZIMANLAR | USED VEHICLES<br>KULLANILAN BAZI ARAÇLAR |
|---|---|
| G 125-16 / G 135-16 / G 155-16 / G 180-16 / G 200-16 / G 210-16 / G 240-16 / G 255 / G 210-16 / G 211-16 / G 240 / G 260-16 (17,03) G 260-16 (11,9-15,9-14,2-11,7-9,75) / G 221 - 9 / 16,02 EPS (IdNr: 715561 Code: GD5) / G 181-9 (BRAZIL) / G 141-9 EURO 6 / G 131-9 (16,02-14,57) EPS (IdNr: 715570 Code: NC5) / G 231-16 / G 241 / G 281 / G 330-12 (11,63-16,17) | 1729-1735-1827-1834-1838-1929-1935-2038-2429-2435-2527-2531-2534-2629-2631-2635-2638 -3229-3234-3534-3535-1831-1835-1840-1844-1848-1850-1857-1934-1938-1953-2044-2050-2544-2550-2650-2643-2644-3031-3234-3331-3348 4148-3331-3335-3336-3340-3235-3340-2031-2040-2648-3548-3553-3557-3538-2641-3244 ACTROS 1628-1831-1833-1834-1835-1840-1841-1843-1846-1858-2040-2535-2540-2543-3028-3228-3235-3326-4040-4141-4148- 2640-3225-3235-3236-3240-3340-3344-4038-4041-4140-4143-4148-3240-4041-4148-2628-1824-4160AXOR Mercedes - Benz Atron 1635-2324-2729 Do Brazıl 2012 Blue Tec 5 BRAZIL Gearbox:<br>G 181-9 / SISU TRUCK AROCS 1842 |

# MERCEDES G281 266mm



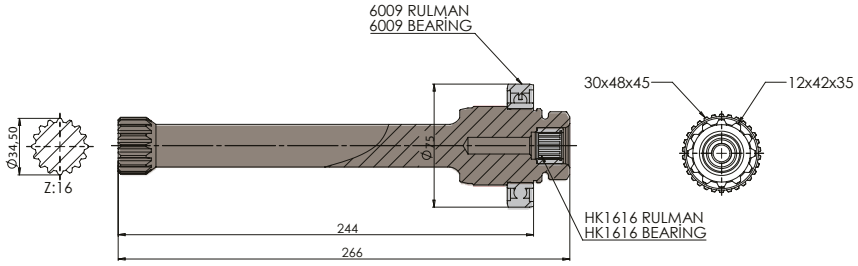


60121266

| GEARBOX<br>ANA ŞANZIMANLAR | USED VEHICLES<br>KULLANILAN BAZI ARAÇLAR |
|---|---|
| G 125-16 / G 135-16 / G 155-16 / G 180-16 / G 200-16 / G 210-16 / G 240-16 / G 255 / G 210-16 / G 211-16 / G 240 / G 260-16 (17,03) G 260-16 (11,9-15,9-14,2-11,7-9,75) / G 221 - 9 / 16,02 EPS (IdNr: 715561 Code: GD5) / G 181-9 (BRAZIL) / G 141-9 EURO 6 / G 131-9 (16,02-14,57) EPS (IdNr: 715570 Code: NC5) / G 231-16 / G 241 / G 281 / G 330-12 (11,63-16,17) | 1729-1735-1827-1834-1838-1929-1935-2038-2429-2435-2527-2531-2534-2629-2631-2635-2638 -3229-3234-3534-3535-1831-1835-1840-1844-1848-1850-1857-1934-1938-1953-2044-2050-2544-2550-2650-2643-2644-3031-3234-3331-3348 4148-3331-3335-3336-3340-3235-3340-2031-2040-2648-3548-3553-3557-3538-2641-3244 ACTROS 1628-1831-1833-1834-1835-1840-1841-1843-1846-1858-2040-2535-2540-2543-3028-3228-3235-3326-4040-4141-4148- 2640-3225-3235-3236-3240-3340-3344-4038-4041-4140-4143-4148-3240-4041-4148-2628-1824-4160AXOR Mercedes - Benz Atron 1635-2324-2729 Do Brazıl 2012 Blue Tec 5 BRAZIL Gearbox:<br>G 181-9 / SISU TRUCK AROCS 1842 |

# MERCEDES G281 AQUATARDER 294mm



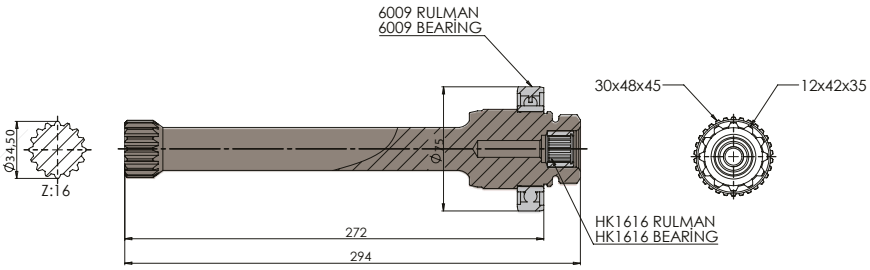


60121294

| GEARBOX<br>ANA ŞANZIMANLAR | USED VEHICLES<br>KULLANILAN BAZI ARAÇLAR |
|---|---|
| G 125-16 / G 135-16 / G 155-16 / G 180-16 / G 200-16 / G 210-16 / G 240-16 / G 255 / G 210-16 / G 211-16 / G 240 / G 260-16 (17,03) G 260-16 (11,9-15,9-14,2-11,7-9,75) / G 221 - 9 / 16,02 EPS (IdNr: 715561 Code: GD5) / G 181-9 (BRAZIL) / G 141-9 EURO 6 / G 131-9 (16,02-14,57) EPS (IdNr: 715570 Code: NC5) / G 231-16 / G 241 / G 281 / G 330-12 (11,63-16,17) | 1729-1735-1827-1834-1838-1929-1935-2038-2429-2435-2527-2531-2534-2629-2631-2635-2638 -3229-3234-3534-3535-1831-1835-1840-1844-1848-1850-1857-1934-1938-1953-2044-2050-2544-2550-2650-2643-2644-3031-3234-3331-3348 4148-3331-3335-3336-3340-3235-3340-2031-2040-2648-3548-3553-3557-3538-2641-3244 ACTROS 1628-1831-1833-1834-1835-1840-1841-1843-1846-1858-2040-2535-2540-2543-3028-3228-3235-3326-4040-4141-4148- 2640-3225-3235-3236-3240-3340-3344-4038-4041-4140-4143-4148-3240-4041-4148-2628-1824-4160AXOR Mercedes - Benz Atron 1635-2324-2729 Do Brazıl 2012 Blue Tec 5 BRAZIL Gearbox:<br>G 181-9 / SISU TRUCK AROCS 1842 |

# HEMA 4106

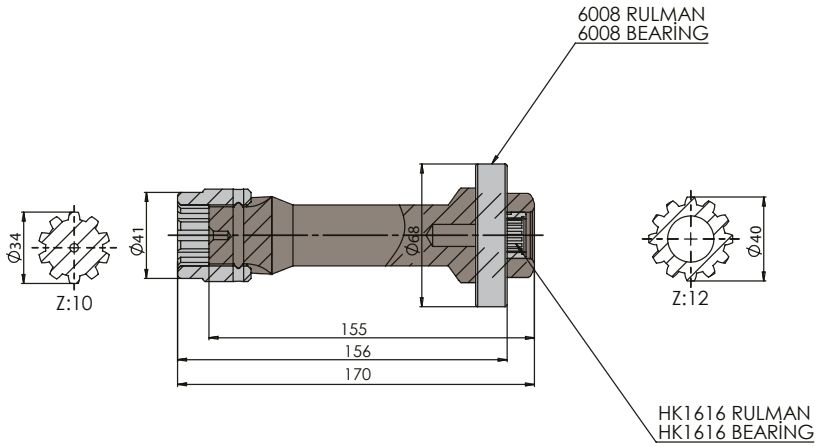




60404106

| GEARBOX<br>ANA ŞANZIMANLAR | USED VEHICLES<br>KULLANILAN BAZI ARAÇLAR |
|---|---|
| PTO EATON FS/FSO/H/V 4106-5206 A/B/H | 180-617-620-622 BMC PRO / 200.26-180 FATIH BMC2520 FORD CARGO / AS 950 / CHRYSLER<br>180.12-210-220 CD-320 MIDLUM RENAULT /FODEN 2000 /ERF E6.18 / 1415-1718 FORD 8.163-<br>8.224-18-224 MAN/ FEDON ATKINSON E6.11 / |

# HEMA 6109 - 8209

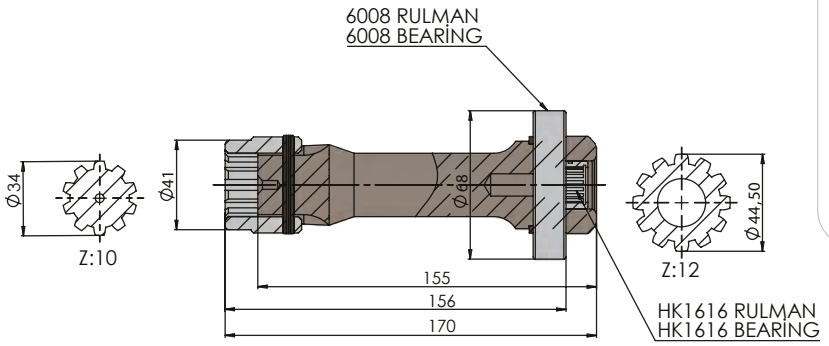




60406109

| GEARBOX<br>ANA ŞANZIMANLAR | USED VEHICLES<br>KULLANILAN BAZI ARAÇLAR |
|---|---|
| EATON FS/FSV/FSO/H/V 6109(6,59-8,81-12,64)-6209-8209(8,76-12,57) FS/FSV/ FSO/H/V 5109-<br>6309-8309 (7,84-6,59-8,76-9,45-12,637) A EATON ES 11109 DD (8,81) - ES 11109 LH ESO 14409<br>EATON ESO 14409 FORD 2018 | 214.26-220.26-280 FATİH / 2520L-2621 FORD CARGO / 522-822-620 BMC 280 / FODEN 3000<br>26.234-26.264-26.284 MAN 6X2 EURO / SEDDON 211 / NISSAN CPC 16 / RENAULT MIDLUM<br>270 TATA LPTA 1621 TC 6x6-LPS 4021 TC / ERF ES6 / 1626 JAC MISIR / AMW INDIA 4930-4018-2518 ISUZU FXZ 23 / HINO FM1JNRA-JNPD-JKPA-GVW 26T / MITSUBISHI M527M2L /<br>527M3L / FN 627 NISSAN UD177ETN-CWA211MHRR-CWA214-CPC16 / HINO 500 SERIES GH1JLPD EURO 2 / 18.264 MAN Mitsubishi Fighter-280-FU281U8 / Fighter-280-FN281U8 / Fighter-280-FM280H8 / Fighter-FM281M8 3233 S FORD CARGO 2018 / 1833 FORD CARGO 2018 |

# IVECO 2846.5



60828465

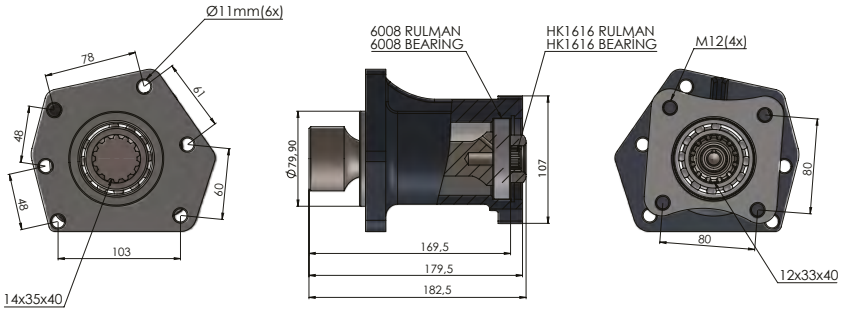


| GEARBOX<br>ANA ŞANZIMANLAR | USED VEHICLES<br>KULLANILAN BAZI ARAÇLAR |
|---|---|
| 2846.5-2842-2835-2830-2646 (500 RPM, SOL) | FIAT IVECO / 65.15-79.13-79.14-80.14 IVECO / 65.12-79.12-95.14-100.13-109.14-135.14<br>ZETA IVECO 79.13-79.14-65.15-100.13-100.16-135.14 IVECO |

# IVECO 2870.9



60828709

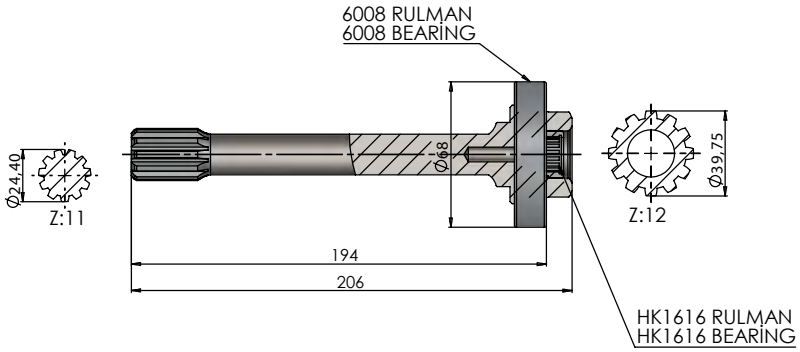


| GEARBOX<br>ANA ŞANZIMANLAR | USED VEHICLES<br>KULLANILAN BAZI ARAÇLAR |
|---|---|
| 2870.9 (675 RPM, SOL) | 120E18-120E23-130E15-130E18-130E23-150E15-150E18-150E23-170E18-170E23-180E21-250E21<br>-100E18-100E23-100E15-130E15-130E18 EUROCARGO IVECO / 250 E24-230 E18-180 E28-250 E23 EUROCARGO IVECO |

# IVECO 2895



60828959

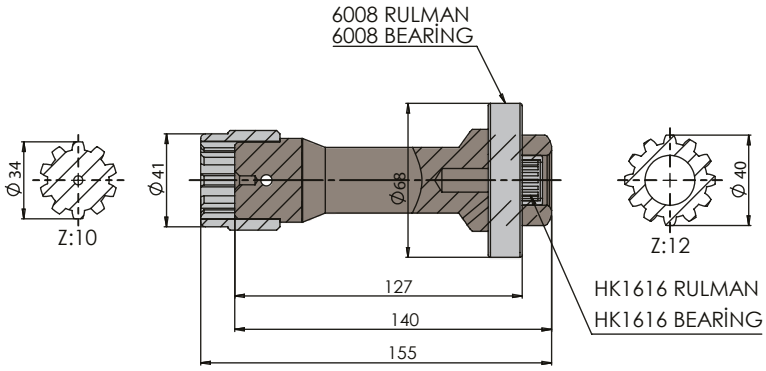


| GEARBOX<br>ANA ŞANZIMANLAR | USED VEHICLES<br>KULLANILAN BAZI ARAÇLAR |
|---|---|
| 2895.9 (675 RPM, SOL) | 120E18-120E23-130E15-130E18-130E23-150E15-150E18-150E23-170E18-170E23-180E21-250E21<br>-100E18-100E23-100E15-130E15-130E18-250E24-180E28-150E25-190EL25-160E24-180E24-150.17<br>-175.24-175.27-179.24 / ML160E24-190EL28 / 180E28 EUROCARGO IVECO / IVECO MLL180E28 |

# RENAULT AT-2412

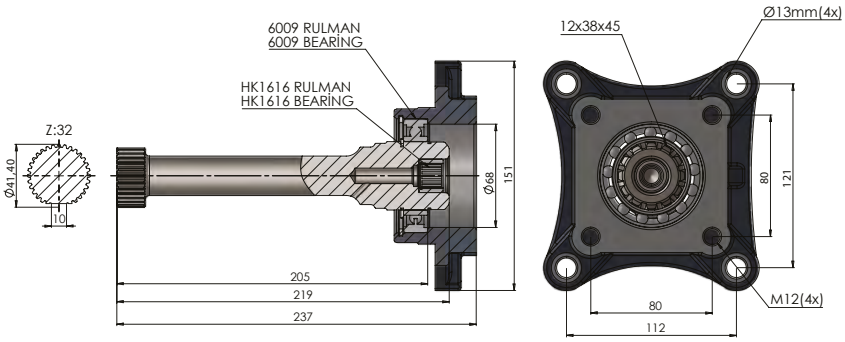




60710440

| GEARBOX<br>ANA ŞANZIMANLAR | USED VEHICLES<br>KULLANILAN BAZI ARAÇLAR |
|---|---|
| AT-2412C, AT-2412D, AT-2512C, AT-2612D, AT-2612E, AT-2812C, AT-2812D, ATO-2512C, ATO2612D<br>, ATO-3112C, V-2412AT, V-2512AT, AT 2514,AT 2515,V-2812AT, VO-2512AT, VO-3112AT, VT-2512C,<br>VT-2812C, VTO-2512C, VTO-3112C, DT-2412 C, VOLVO VO 3112 AT | VOLVO FH / FH 12 / FM / FM 12 / F 9 / FMX - RENAULT KERAX 440 / FM 13 / FH 13 RENAULT PREMİUM<br>430.19T / VOLVO B13R-D13C-FM 400 / FM 450RENAULT KERAX DXI / MAGNUM DXI / MIDLUM DXI /<br>PREMIUM DXI 430.19 |

# LIAZ

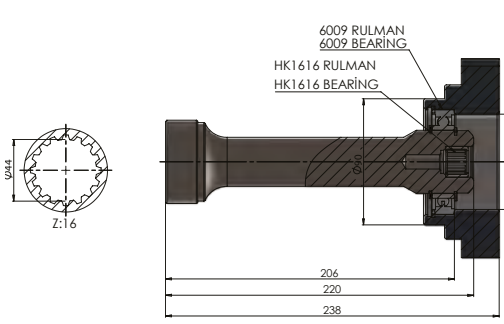




60610150

| GEARBOX<br>ANA ŞANZIMANLAR | USED VEHICLES<br>KULLANILAN BAZI ARAÇLAR |
|---|---|
| LIAZ | LIAZ |

# VOLVO SR 1400/1700 LONG

## VOLVO SR 1400/1700 UZUN



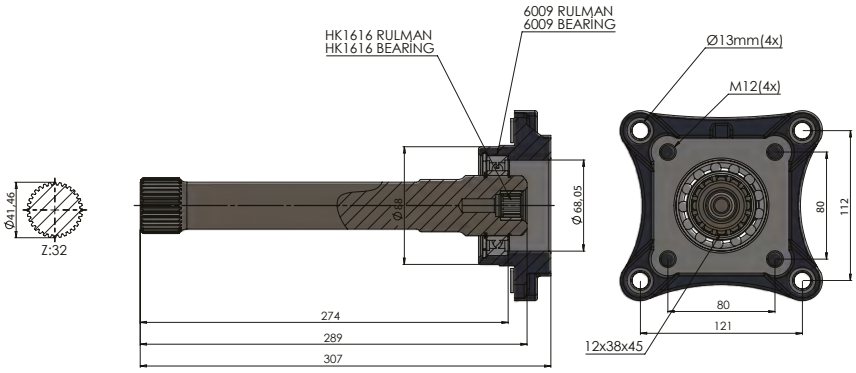


60901701

| GEARBOX<br>ANA ŞANZIMANLAR | USED VEHICLES<br>KULLANILAN BAZI ARAÇLAR |
|---|---|
| VOLVO : R 1000 - R 1400 - R 1700 - R 1900 - R 2000 - R 2400 - RO 2400 - SR 1000 - SR 1400 - SR 1700 - SR 1900 - SR 2000 - SR 2400 - VT 1708 - VT 2009B - VT 2014 - VT 2212 - VT 2214 - VT 2214B - VT 2514 OD - VT 2514B - VT 2814B - VTO 2214B (OD) - VTO 2514B (OD) - VTO 2814B / | VOLVO: F 10 - F 12 FS 6X4 - F 16 - FH 12 - FH 12340 - FH 12380 - FH 12420 - FH 16 - FH 16470 - FH 16520 - FH 16560 - FH 16610 - FL 10 - FL 616 - FL 616 4X2 - FL 7 - FL 7 4X2 - FM 10320 - FM 10360 - FM 12 - FM 12340 - FM 12380 - FM 12380 8X4 - FM 12420 - FM 12420 8X4 - FM 12460 - FM 12500 - FM 7 - FM 7250 - FM 7290 - N 12 - N10 4X2 - NL 12 |

# VOLVO SR 1400/1700 SHORT

## VOLVO SR 1400/1700 SHORT



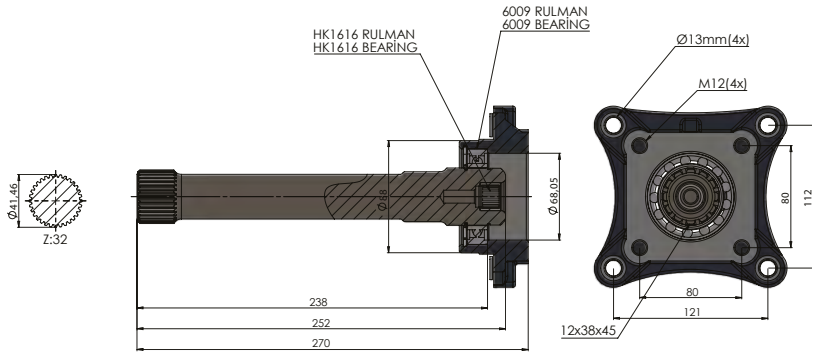


60901710

| GEARBOX<br>ANA ŞANZIMANLAR | USED VEHICLES<br>KULLANILAN BAZI ARAÇLAR |
|---|---|
| VOLVO : R 1000 - R 1400 - R 1700 - R 1900 - R 2000 - R 2400 - RO 2400 - SR 1000 - SR 1400 -SR 1700 - SR 1900 - SR 2000 - SR 2400 - VT 1708 - VT 2009B - VT 2014 - VT 2212 - VT 2214 - VT 2214B - VT 2514 OD - VT 2514B - VT 2814B - VTO 2214B (OD) - VTO 2514B (OD) - VTO 2814B / | VOLVO: F 10 - F 12 FS 6X4 - F 16 - FH 12 - FH 12340 - FH 12380 - FH 12420 - FH 16 - FH 16470 - FH 16520 - FH 16560 - FH 16610 - FL 10 - FL 616 - FL 616 4X2 - FL 7 - FL 7 4X2 - FM 10320 - FM 10360 - FM 12 - FM 12340 - FM 12380 - FM 12380 8X4 - FM 12420 - FM 12420 8X4 - FM 12460 -FM 12500 - FM 7 - FM 7250 - FM 7290 - N 12 - N10 4X2 - NL 12 |

# VOLVO R7



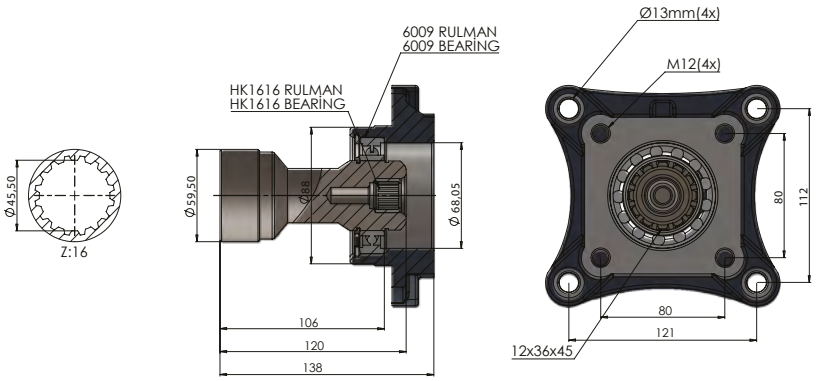


60970072

| GEARBOX<br>ANA ŞANZIMANLAR | USED VEHICLES<br>KULLANILAN BAZI ARAÇLAR |
|---|---|
| SR/R70-72 | FL 7- FL 10 - F 12 -N 12-N 10-NL 12 VOLVO |

# FULLER 15612

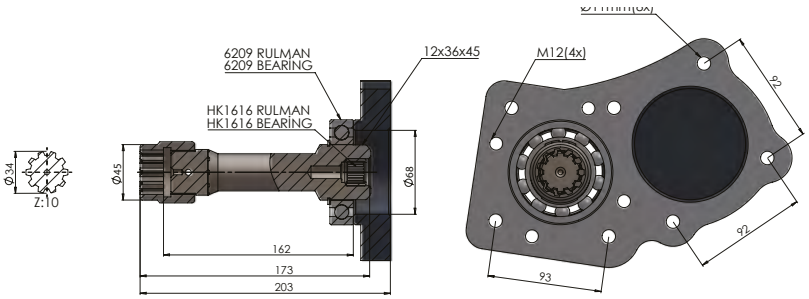




60517316

| GEARBOX<br>ANA ŞANZIMANLAR | USED VEHICLES<br>KULLANILAN BAZI ARAÇLAR |
|---|---|
| EATON-PTO FULLER 11612-12612-13612-15612-14607-16612 A/H (675 RPM, SOL) | 440E42-720E37 EUROTECH-EUROTRACER-EUROSTAR / LEYLAND 80.330-85.330-85.400 DAF / 190.36-240.36 IVECO / FODEN 4275 SEDON ATKINSON 3.11 L25 / ERF E 14.35 TT - EC10-EC 11 400E34 IVECO - SEDDON 23.405 / STEYR |

# FULLER 17316 SHORT

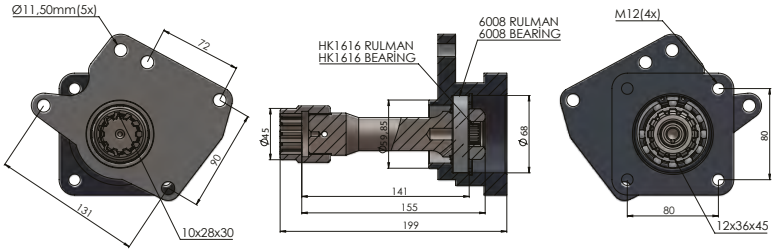




60517317

| GEARBOX<br>ANA ŞANZIMANLAR | USED VEHICLES<br>KULLANILAN BAZI ARAÇLAR |
|---|---|
| RTSO 12316-14316-15316-17316 A (1000 RPM, SOL) | 19.413 SLIENT 19.314-19.364-19.464-18.403-35.403-21.314 - 24.417-27.364 MAN 35.314-35.414-37.464-41.414 -41.603-41.464-50.414 MAN/ ERF EC11 / ERF E6-EC14 |

# FULLER 17316 LONG

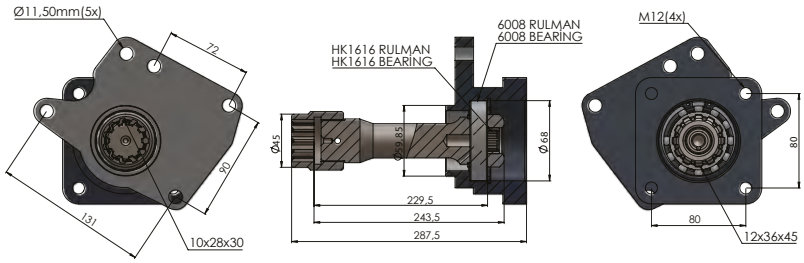




60511612

| GEARBOX<br>ANA ŞANZIMANLAR | USED VEHICLES<br>KULLANILAN BAZI ARAÇLAR |
|---|---|
| RTSO 12316-14316-15316-17316 A (1000 RPM, SOL) | 19.413 SLIENT 19.314-19.364-19.464-18.403-35.403-21.314 - 24.417-27.364 MAN 35.314-35.414-37.464-41.414 -41.603-41.464-50.414 MAN/ ERF EC11 / ERF E6-EC14 |

# SCANIA GRS 905 LONG



60300905

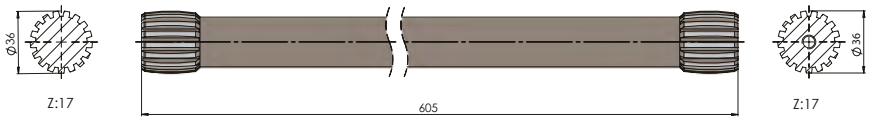


| GEARBOX<br>ANA ŞANZIMANLAR | USED VEHICLES<br>KULLANILAN BAZI ARAÇLAR |
|---|---|
| GR 875/ GR 905 / GRS 905 / GRSO 906 / GRS 906 (1250 RPM, SOL) | R420-G 420-G 400 EURO 5- R 500 SCANIA / 18.460 MAN TGS |

# SCANIA GRS 905 SHORT



60300906

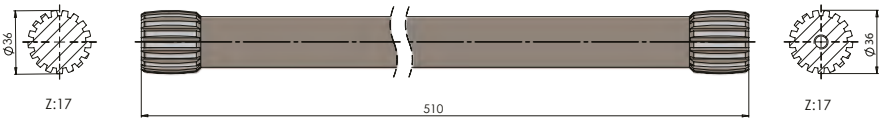


| GEARBOX<br>ANA ŞANZIMANLAR | USED VEHICLES<br>KULLANILAN BAZI ARAÇLAR |
|---|---|
| GR 875/ GR 905 / GRS 905 / GRSO 906 / GRS 906 (1250 RPM, SOL) | R420-G 420-G 400 EURO 5- R 500 SCANIA / 18.460 MAN TGS |

# DIRECTION CONTROL VALVE 140 LT 3B

## 3B 140LT AÇIK DEVRE YON VENTİLİ

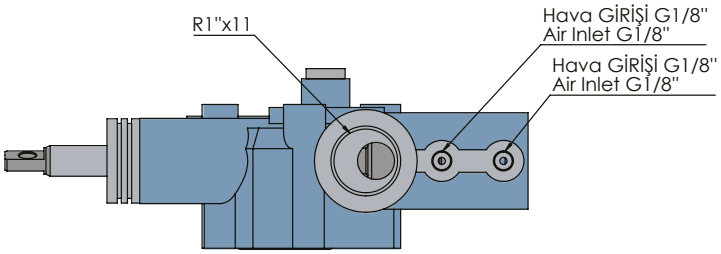




36001061

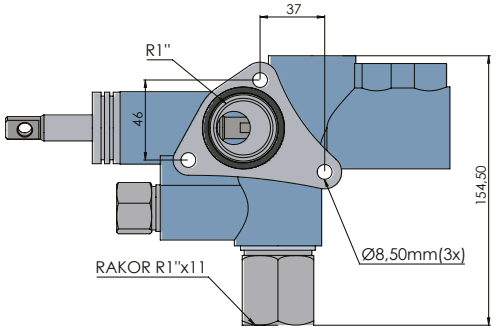


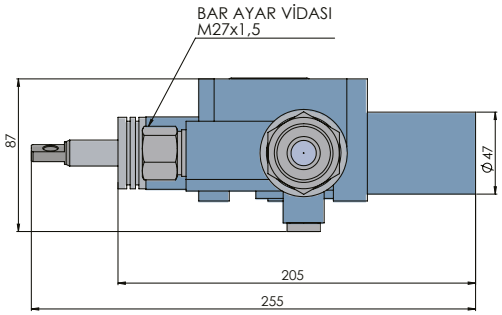


| DISPLACEMENT DEBİ (Lt/min) | Max. Pressure Maksimum Basınç | Hydraulic Bağlantı "B" Hydraulic Connections |
|---|---|---|
| 140 | 190 | G1"Ters |

## 4B 140LT AÇIK DEVRE YON VENTİLİ

# DIRECTION CONTROL VALVE 140 LT 4B

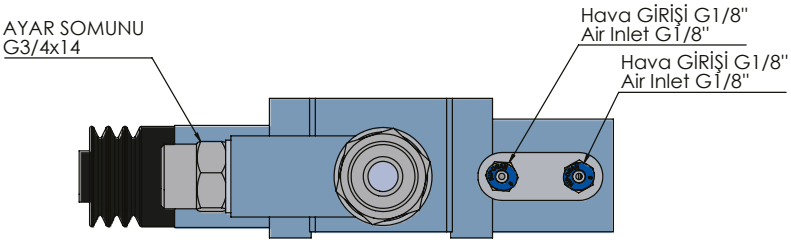




36001030

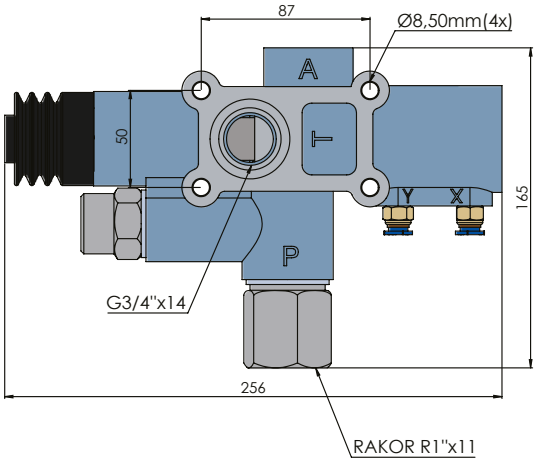


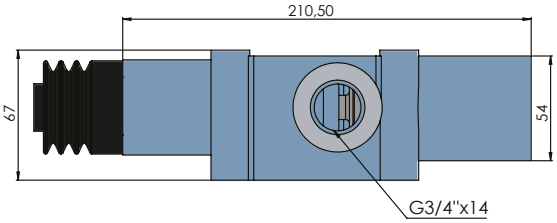


| DISPLACEMENT DEBİ (Lt/min) | Max. Pressure Maksimum Basınç | Hydraulic Bağlantı "B" Hydraulic Connections |
|---|---|---|
| 140 | 190 | G1"Ters |

# DIRECTION VALVE TANK TYPE (3/4” - 1”)



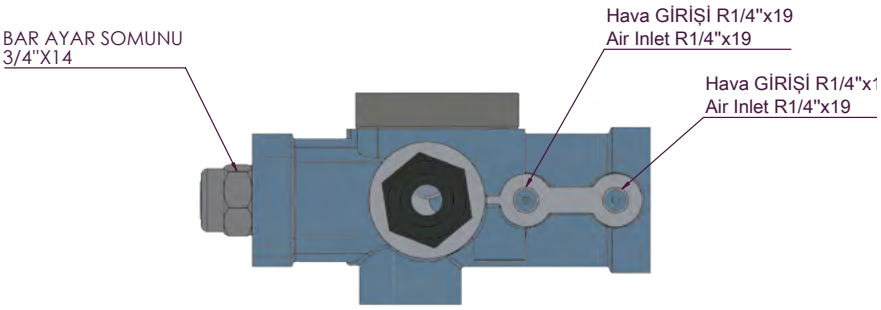


**36001020, 36001021**

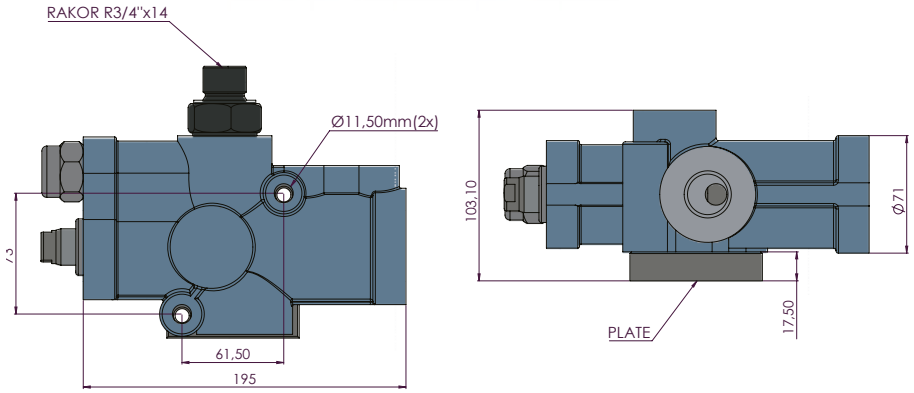


| DISPLACEMENT DEBİ (Lt/min) | Max. Pressure Maksimum Basınç | Hydraulic Bağlantı "B" Hydraulic Connections |
|---|---|---|
| 140 | 190 | G3/4" |
| 140 | 190 | G1" |

# DIRECTION VALVE (3/4” - 1”)

## YÖN VENTİLİ



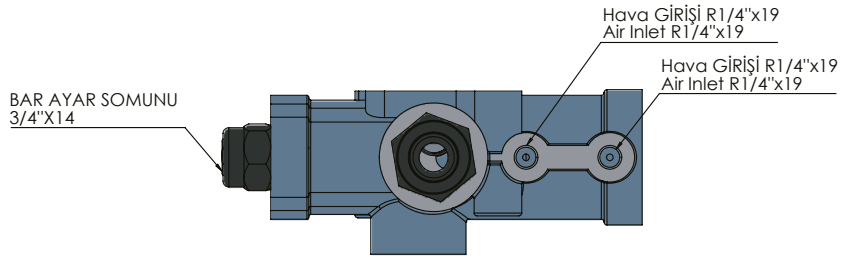


**36001010, 36001011**

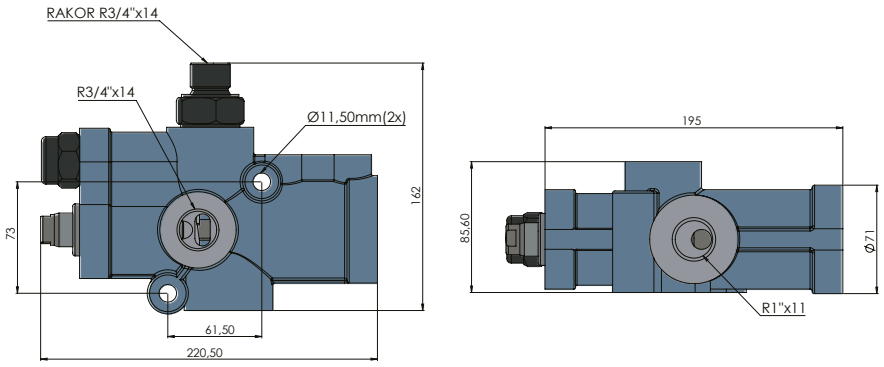


| DISPLACEMENT DEBİ (Lt/min) | Max. Pressure Maksimum Basınç | Hydraulic Bağlantı "B" Hydraulic Connections |
|---|---|---|
| 140 | 190 | G3/4" |
| 140 | 190 | G1" |

# DIRECTION CONTROL VALVE OPEN-LOOP 3B

## 3B AÇIK DEVRE YÖN VENTİLİ

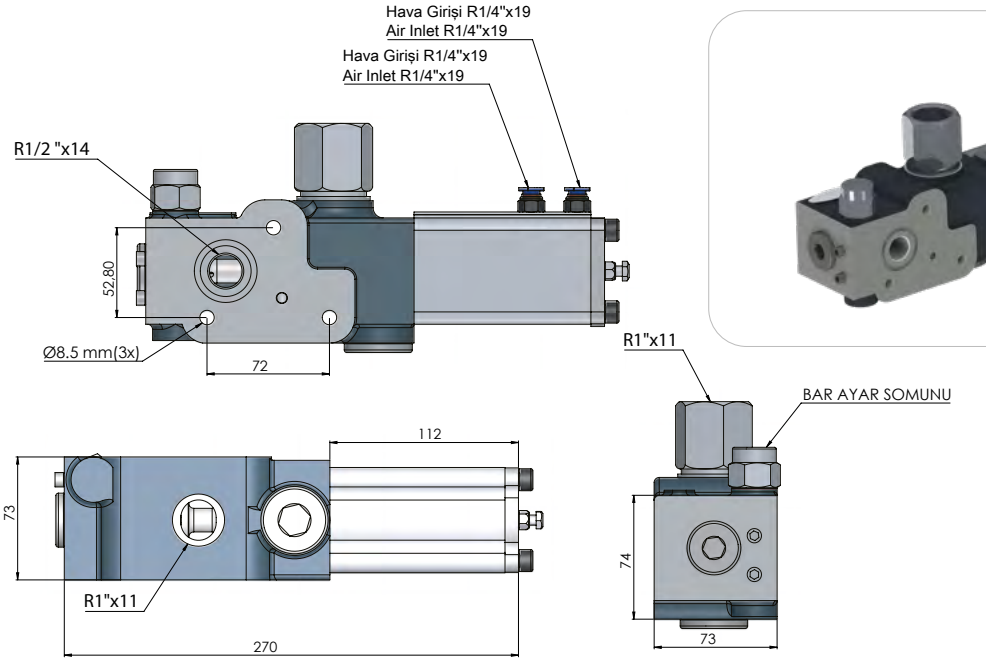




36001090

| DISPLACEMENT DEBİ (Lt/min) | Max. Pressure Maksimum Basınç | Hydraulic Bağlantı "B" Hydraulic Connections |
|---|---|---|
| 180 | 190 | G1"Ters |

# TRAILER DIRECTION CONTROL VALVE

## RÖMORK VENTİLİ

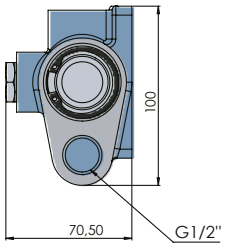




36001050

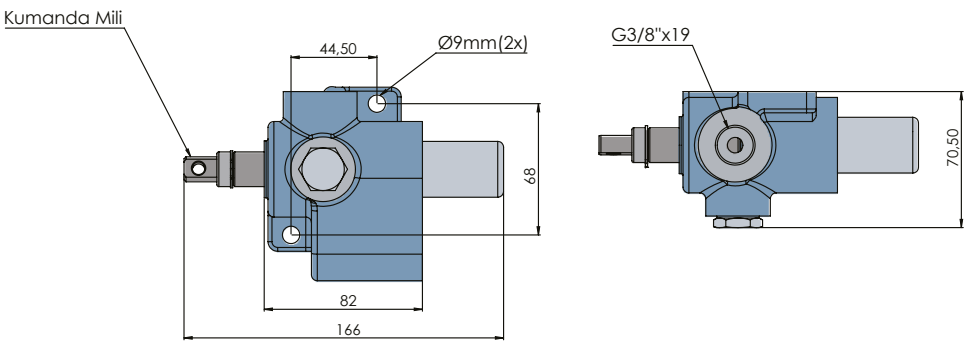


| DISPLACEMENT DEBİ (Lt/min) | Max. Pressure Maksimum Basınç | Hydraulic Bağlantı "B" Hydraulic Connections |
|---|---|---|
| 180 | 190 | G1"Ters |

# OPEN-LOOP LIMIT CONTROL VALVE (3/4"-1")

## SINIR KONTROL VALFİ AÇIK (3/4"-1")



**36001520, 36001521**

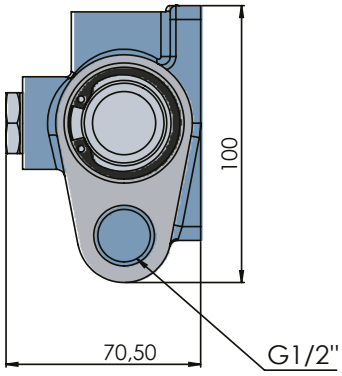


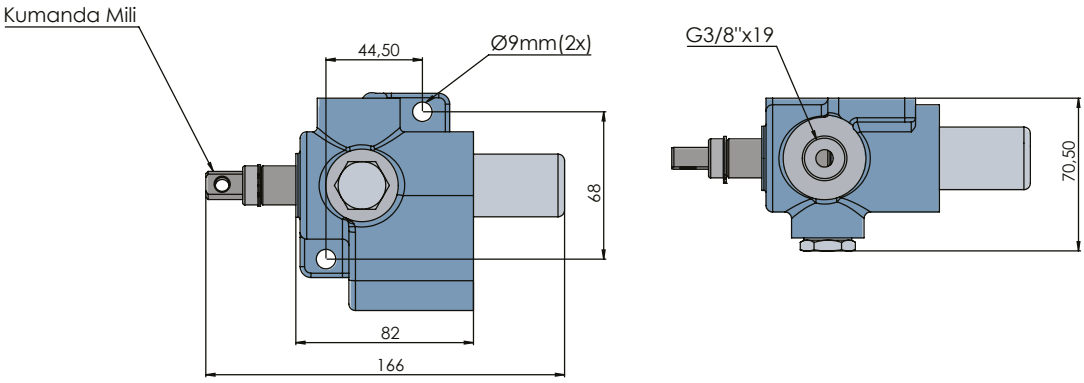


# CLOSED-LOOP LIMIT CONTROL VALVE (3/4"-1")

## SINIR KONTROL VALFİ KAPALI (3/4"-1")



**36001510, 36001511**

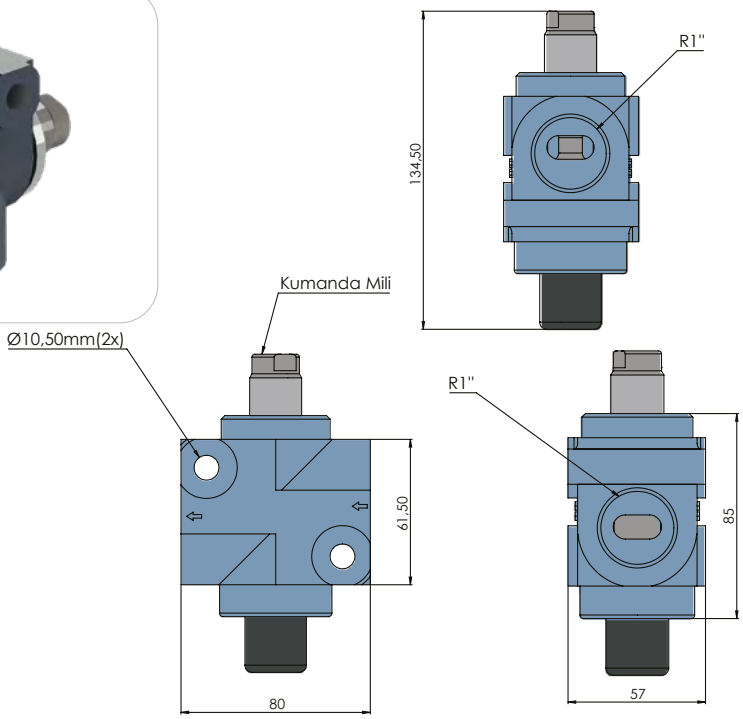

# 3X4 UNI ADAPTER

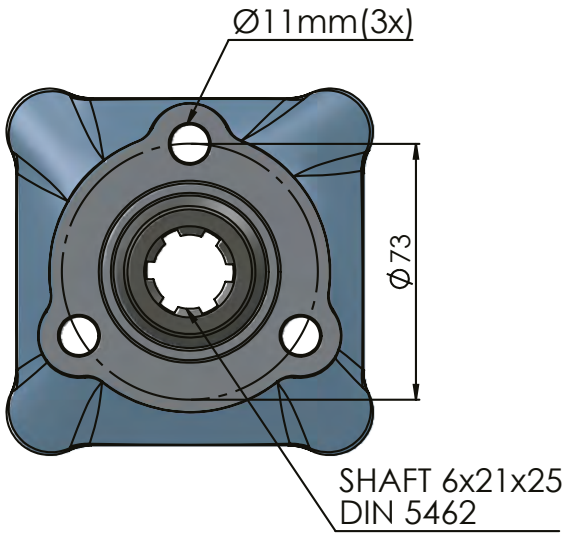




36002001

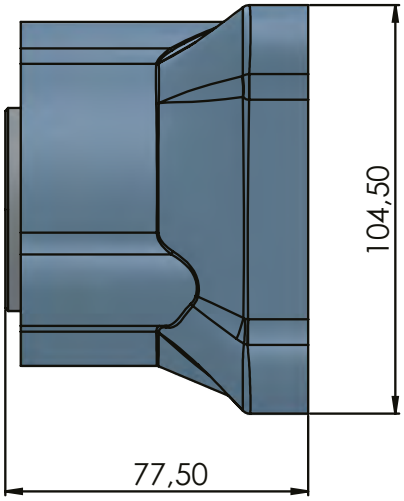


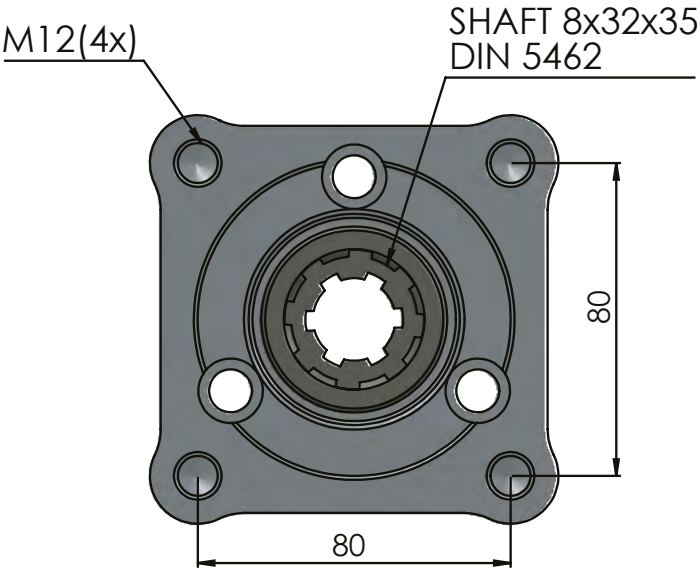

# 4X3 ISO ADAPTER



36002002

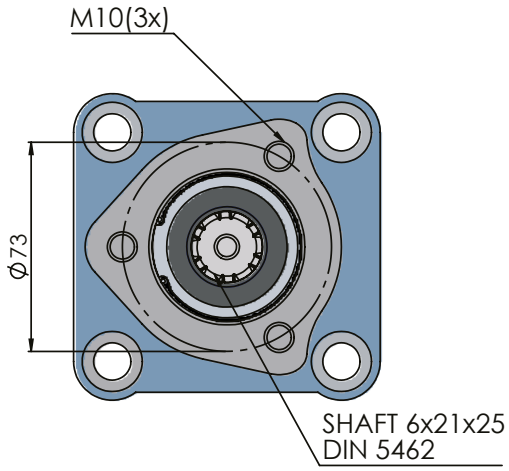


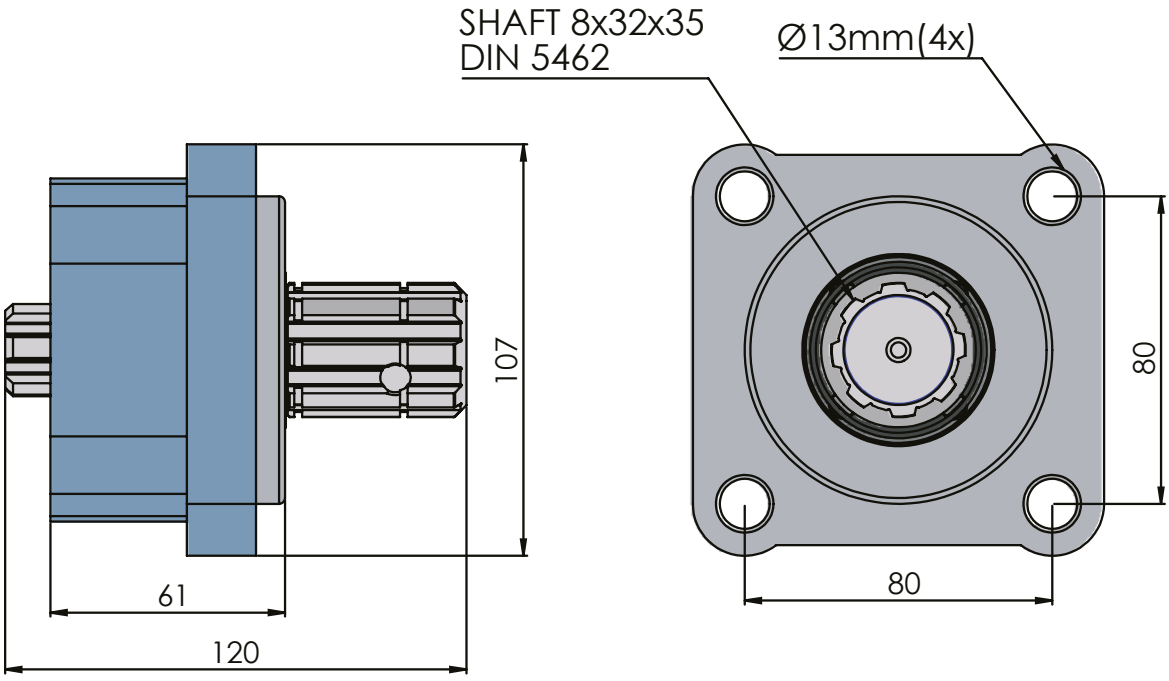

# 4X4 ISO LONG EXTENSION ADAPTER

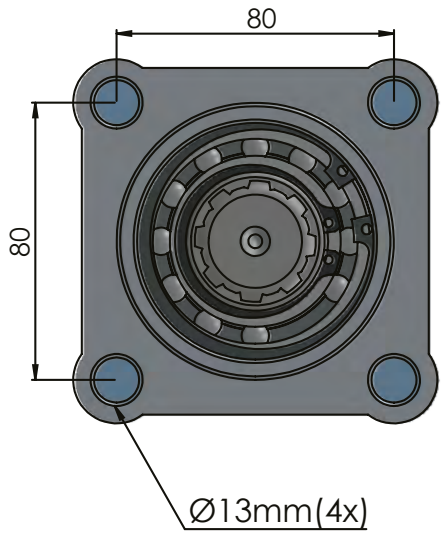




36002010

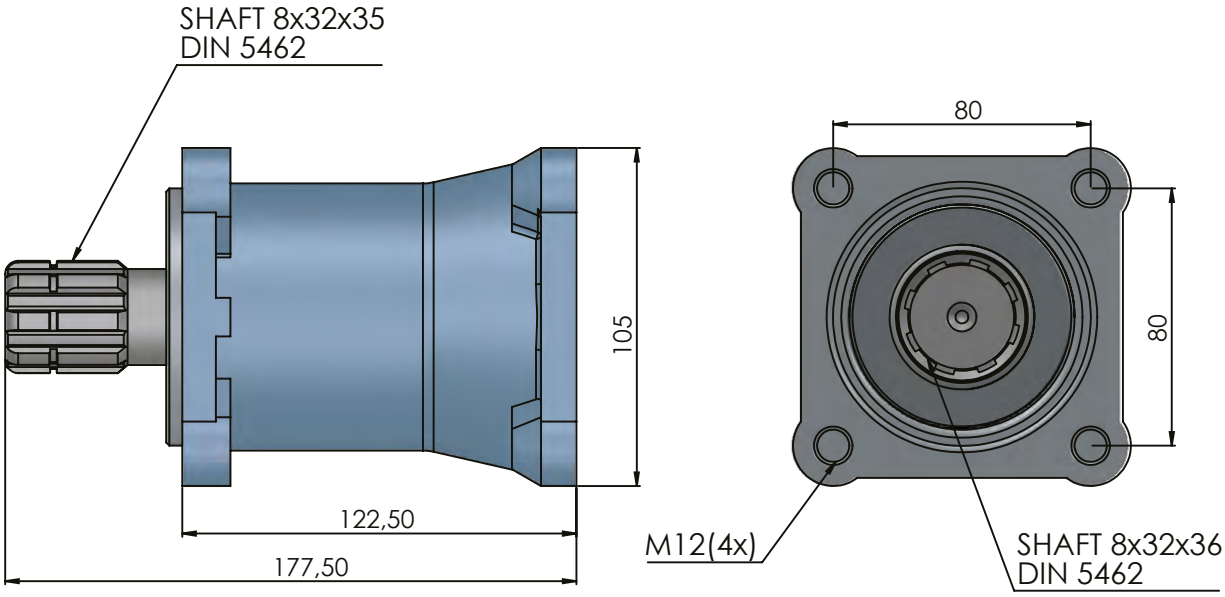

# 4X4 ISO SHORT EXTENSION ADAPTER



36002012

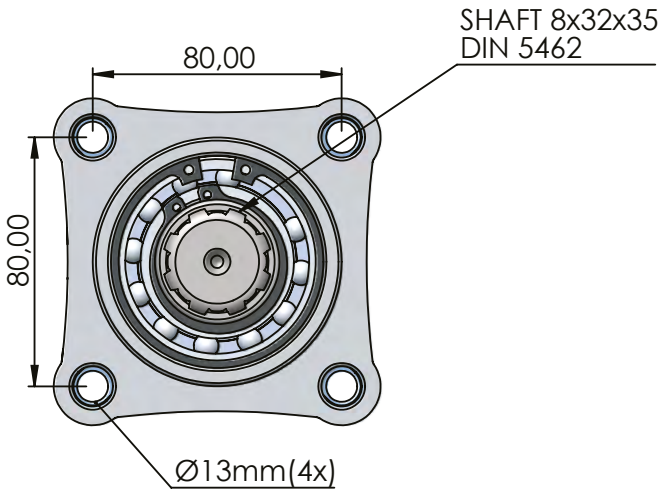


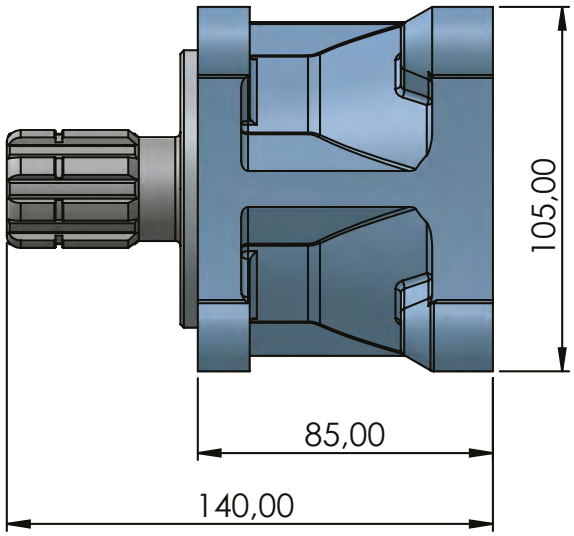


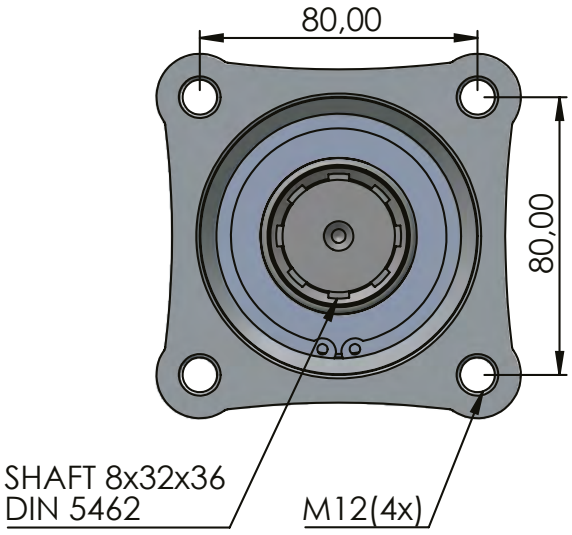

# SAE UNI ADAPTER

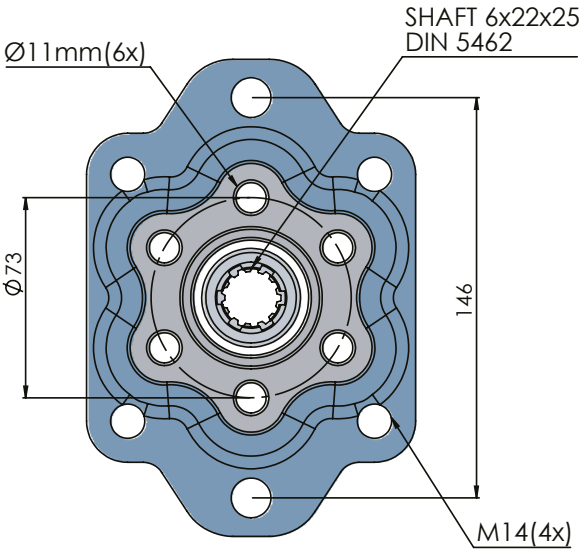




36002108

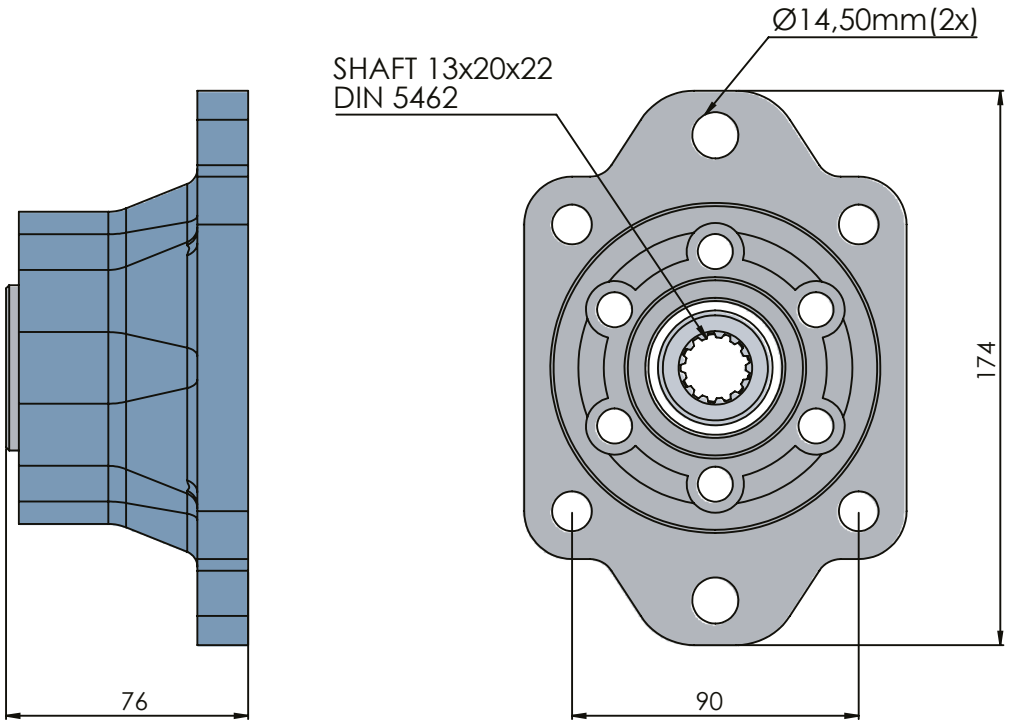

# SAE ISO ADAPTER



36002101

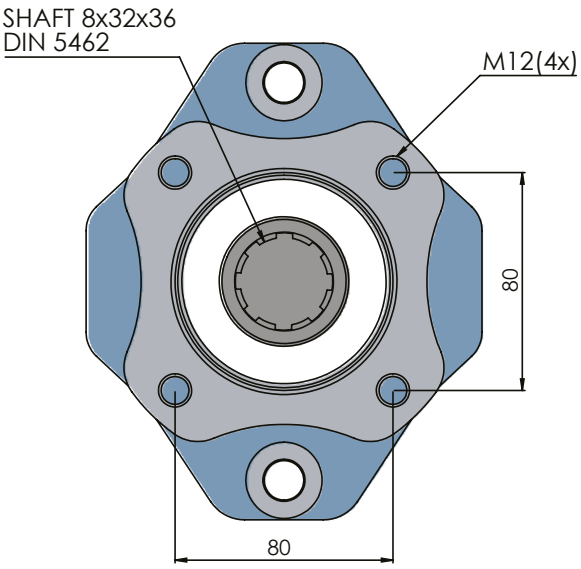


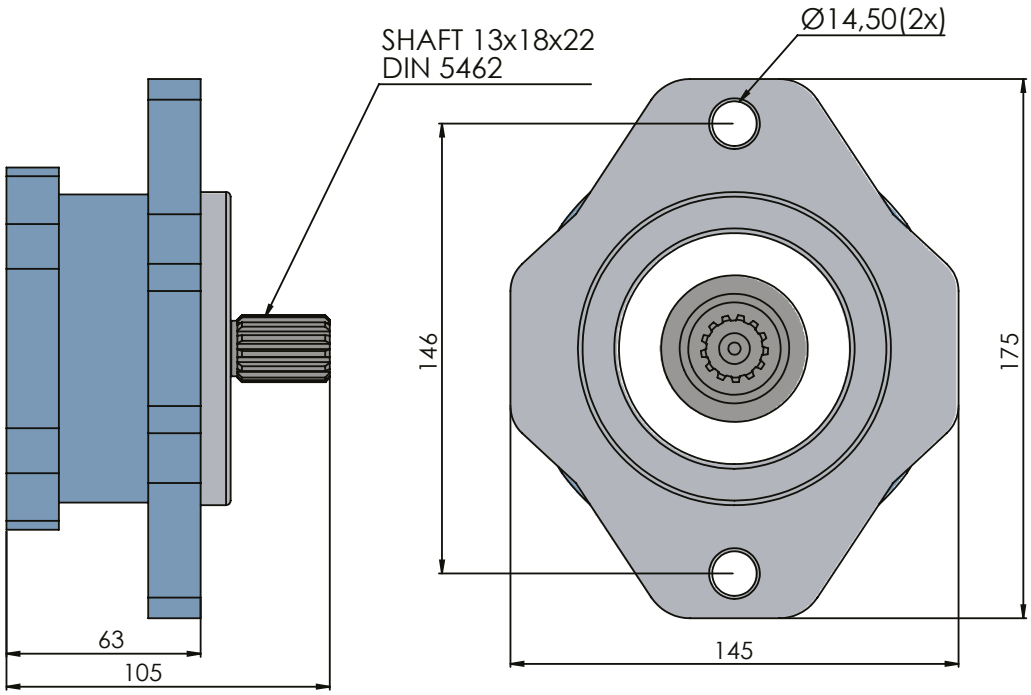

# ZF CENTRING ADAPTER
## ZF MERKEZLEME ADAPTÖRÜ

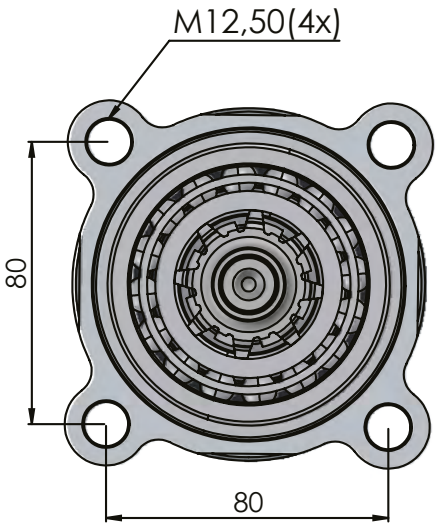




36002050

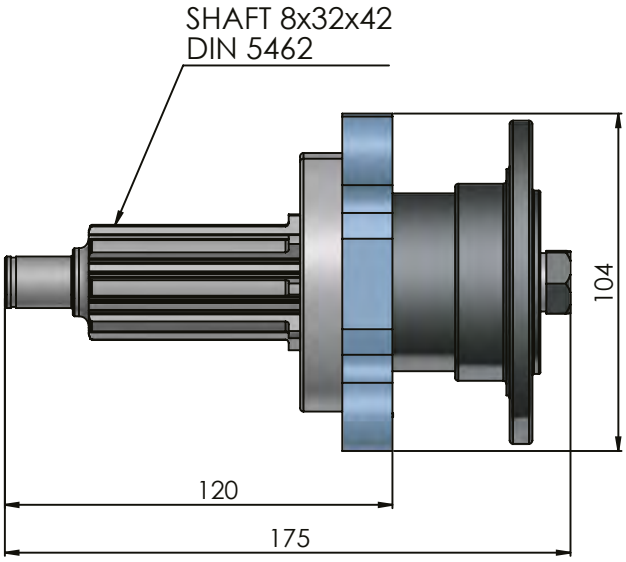


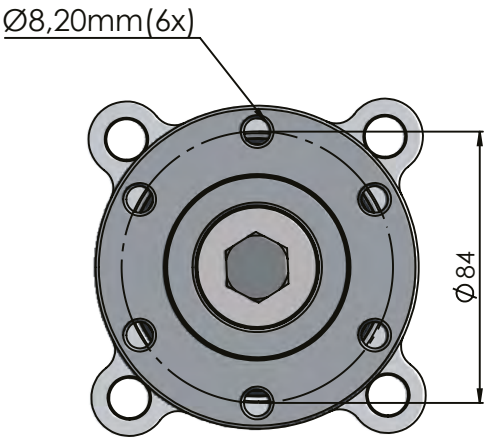



213

# OIL COOLERS

YAĞ SOĞUTUCULAR



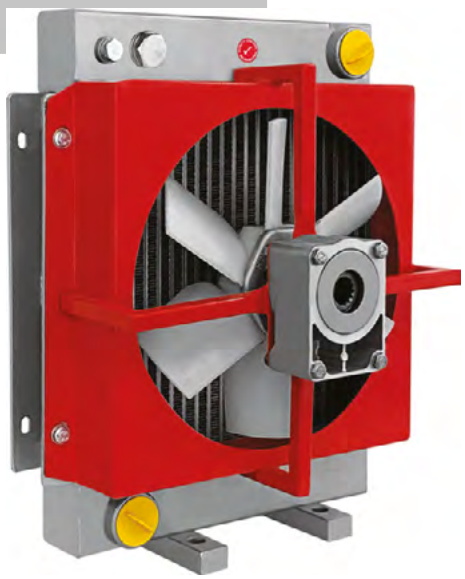





# HYDRAULIC OIL COOLER
# GM-MCB SERIE

# GM-MCB SERIE

GEMMA HYDRAULIC OIL COOLER

## 1. 230/400 VOLT ENGINE OIL COOLERS

**GM-MCB Serie** is our product line used in all industrial systems.
The hydraulic cooling products we offer are manufactured with high quality standards. From material supply to production and post-production quality control processes, every stage is under strict control and surveillance.

**GM-MCB Serie is used in;**
-Mobile systems,
-Fixed unit applications,

Our products are complete cooling systems for AC-DC applications.
Complete coolers for AC 230-400 volt applications for.





### PROPERTIES
-Test Pressure: 30bar.
-Operating Pressure: 25 bar.
-Used for cooling Synthetic, Mineral Oils, and some liquids.
-Heat in the fluid is cooled through the help of a fan.
-Bar-Plate type cooling pad is used.
-Flexible 6063 aluminum material is used.
-Designed for all kinds of working conditions.
-Ready to use and easy to maintain.
-Has high efficiency and low cost.

## 2. CAPACITY PROPERTIES



| Product Model | Max. Flowrate (Lt./min) | Capacity (Kcal/h) |
|---|---|---|
| GM-MCB1 | 20 | 1000 |
| GM-MCB2 | 50 | 2500 |
| GM-MCB3 | 75 | 5000 |
| GM-MCB4 | 75 | 5000 |
| GM-MCB5 | 100 | 6000 |
| GM-MCB6 | 120 | 12000 |
| GM-MCB7 | 150 | 22500 |
| GM-MCB8 | 200 | 50000 |
| GM-MCB9 | 250 | 55000 |
| GM-MCB10 | 300 | 60000 |
| GM-MCB11 | 400 | 70000 |

## 3. TECHNICAL DATA

| Model Data | Fan Diameter | Fan Speed | dB(A) 1m | Voltage(V) | kW | Operating Pressure (Bar) |
|---|---|---|---|---|---|---|
| GM-MCB1 | - | - | - | - | - | - |
| GM-MCB2 | 250 | 1500 | - | 230-400 | 0.18 | 25 |
| GM-MCB3 | 380 | 1000 | 68 | 230-400 | 0.25 | 25 |
| GM-MCB4 | 380 | 1000 | 68 | 230-400 | 0.25 | 25 |
| GM-MCB5 | 450 | 1500 | 77 | 230-400 | 0.37 | 25 |
| GM-MCB6 | 500 | 1000 | 68 | 230-400 | 0.37 | 25 |
| GM-MCB7 | 500 | 1000 | 68 | 230-400 | 0.37 | 25 |
| GM-MCB8 | 630 | 1500 | 90 | 230-400 | 2.2 | 25 |
| GM-MCB9 | 900 | 750 | 82 | 230-400 | 1.5 | 15 |
| GM-MCB10 | 900 | 1000 | 88 | 230-400 | 3.0 | 15 |
| GM-MCB11 | 1000 | 1000 | 90 | 400 | 7.5 | 15 |

## 4. DIMENSIONS

| Dimensions | GM-MCB1 | GM-MCB2 | GM-MCB3 | GM-MCB4 | GM-MCB5 | GM-MCB6 | GM-MCB7 | GM-MCB8 | GM-MCB9 | GM-MCB10 | GM-MCB11 |
|---|---|---|---|---|---|---|---|---|---|---|---|
| A | 200 | 300 | 400 | 400 | 550 | 650 | 790 | 800 | 1025 | 1025 | 1170 |
| B | 195 | 305 | 395 | 395 | 410 | 560 | 560 | 650 | 010 | 910 | 1200 |
| C | 63 | 63 | 63 | 94 | 94 (63) | 94 | 94 | 140 | 94 | 113 | 140 |
| D | 254 | 360 | 452 | 452 | 467 | 612 | 613 | 723 | 992 | 992 | 1270 |
| E | 315 | 415 | 515 | 535 | 690 | 790 | 940 | 960 | 1350 | 1350 | 1520 |
| F | 45 | 45 | 45 | 63 | 63 | 63 | 70 | 70 | 75 | 75 | 70 |
| G | 65 | 115 | 160 | 160 | 165 | 235 | 235 | 280 | 390 | 390 | 532 |
| H | 80 | 150 | 200 | 200 | 200 | 310 | 310 | 400 | 440 | 440 | 525 |
| I | 140 | 190 | 190 | 240 | 240 | 240 | 240 | 240 | 215 | 215 | 200 |
| K | 200 | 250 | 150 | 300 | 300 | 300 | 300 | 300 | 580 | 580 | 750 |
| L | - | - | - | - | - | - | - | - | - | - | - |
| M | - | - | - | - | - | - | - | - | - | - | - |
| N (max) | 175 | 370 | 400 | 430 | 440 | 450 | 450 | 590 app | 650 app | 790 app | 900 app |
| O | 1 BSP | 1 BSP | 1 BSP | 1 BSP | 1 BSP (1 BSP) | 1 BSP | 1 BSP | 1 BSP | - | - | - |

## 5. DIMENSIONS OF THE COOLERS BETWEEN GM-MCB1 AND GM-MCB7

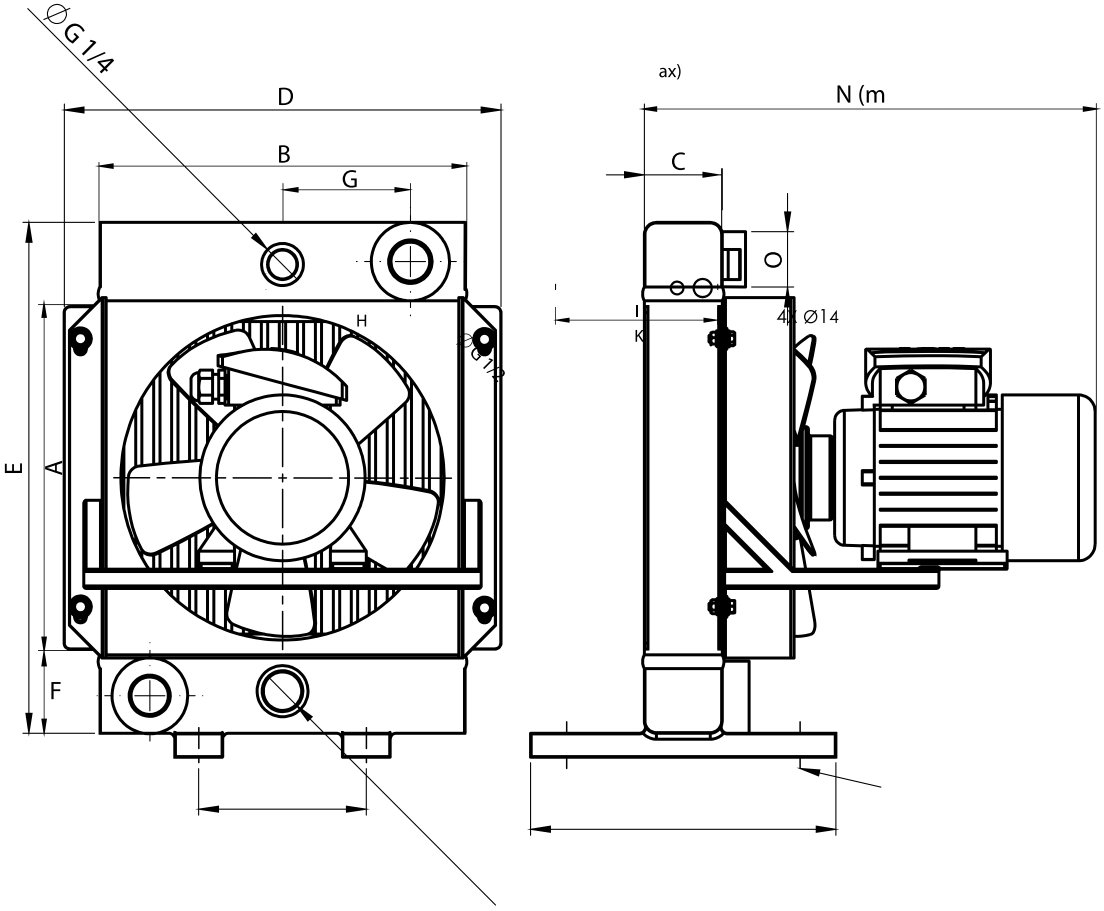

## 6. DIMENSIONS OF THE COOLERS BETWEEN GM-MCB8 AND GM-MCB11

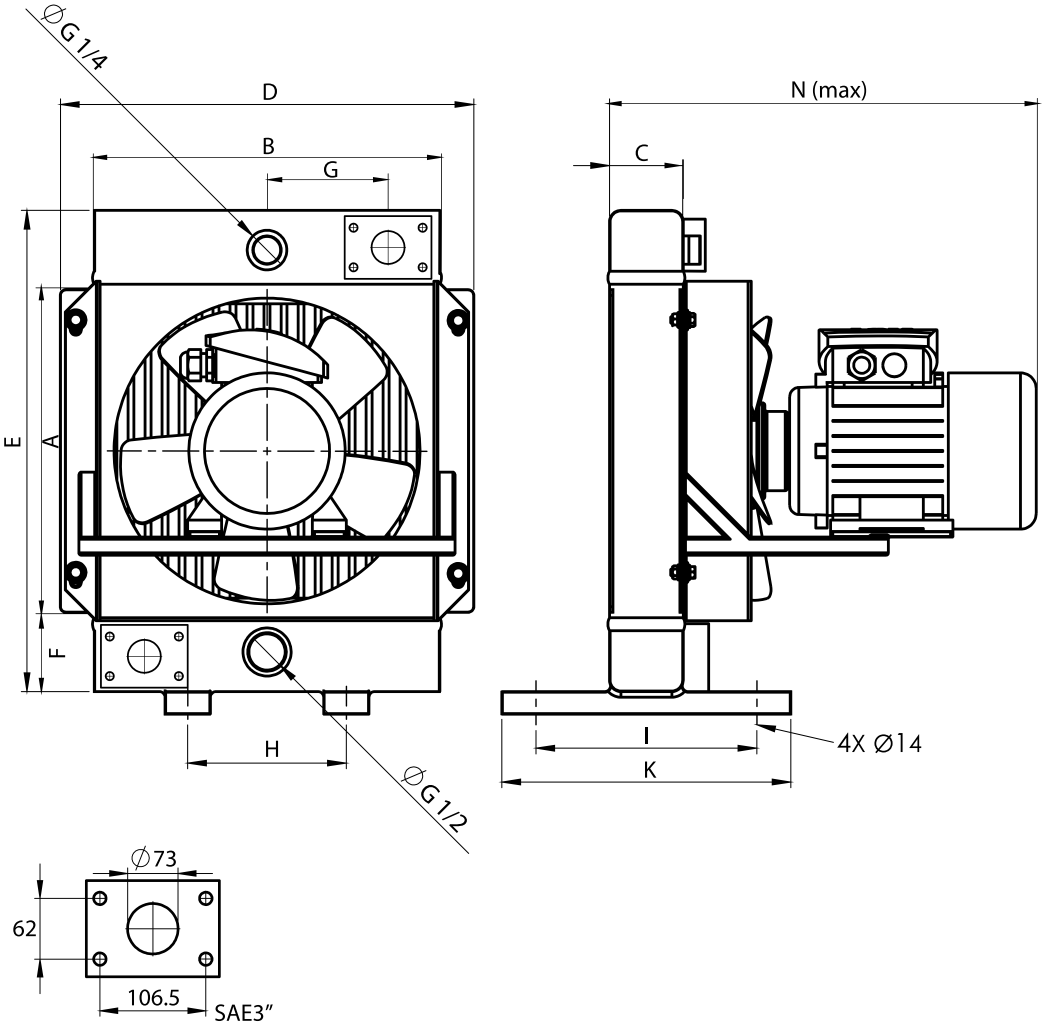



# HYDRAULIC OIL COOLER
# GM-MCG SERIE

# GM-MCG SERIE

GEMMA HYDRAULIC OIL COOLER

## 1. GENERAL INFORMATION

**GM-MCG Serie** is our product line used in all industrial systems.
The hydraulic cooling products we offer are manufactured with high quality standards. From material supply to production and post-production quality control processes, every stage is under strict control and surveillance.

**GM-MCG Serie is used in;**
-Mobile systems,
-Fixed unit applications,

Our products are complete cooling systems for AC-DC applications.





### PROPERTIES

-Test Pressure: 30bar.
-Operating Pressure: 25 bar.
-Used for cooling Synthetic, Mineral Oils, and some liquids.
-Heat in the fluid is cooled through the help of a fan.
-Bar-Plate type cooling pad is used.
-Flexible 6063 aluminum material is used.
-Designed for all kinds of working conditions.
-Ready to use and easy to maintain.
-Has high efficiency and low cost.

## 2. CAPACITY PROPERTIES



| Product Model | Max. Flowrate (Lt./min) | Capacity (Kcal/h) |
|---|---|---|
| GM-MCG1 | 40 | 2000 |
| GM-MCG2 | 80 | 5500 |
| GM-MCG3 | 100 | 6000 |
| GM-MCG4 | 120 | 12000 |
| GM-MCG5 | 140 | 20000 |
| GM-MCG6 | 160 | 25000 |
| GM-MCG7 | 180 | 40000 |
| GM-MCG8 | 220 | 60000 |

## 3. TECHNICAL DATA

| Model Data | Fan Diameter | Fan Speed | dB(A) 1m | Voltage(V) | kW | Operating Pressure (Bar) |
|---|---|---|---|---|---|---|
| GM-MCG1 | 155-155-160 | 750-750-700 | 51-51-50 | 12-24-230-400 | 0.04-0.04-0.05 | 25 |
| GM-MCG2 | 195-195-200 | 2700-2700-2800 | 72-72-68 | 12-24-230-400 | 0.09-0.10-0.06 | 25 |
| GM-MCG3 | 195-195-200 | 2700-2700-2800 | 72-72-68 | 12-24-230-400 | 0.09-0.10-0.06 | 25 |
| GM-MCG4 | 245-245-250 | 2700-2700-2800 | 74-74-72 | 12-24-230-400 | 0.11-0.11-0.10 | 25 |
| GM-MCG5 | 290-290-300 | 2700-2700-2800 | 74-74-72 | 12-24-230-400 | 0.18-0.18-0.19 | 25 |
| GM-MCG6 | 345-345-350 | 2700-2700-2800 | 78-78-74 | 12-24-230-400 | 0.21-0.21-0.32 | 25 |
| GM-MCG7 | 10″ x2-10″ x2-630 | 2700-2700-1500 | 74-74-89 | 12-24-230-400 | 0.15-0.15-0.43 | 25 |
| GM-MCG8 | 14″ x2-14″ x2-630 | 2700-2700-1500 | 74-74-98 | 12-24-230-400 | 0.15-0.15-0.43 | 25 |

## 4. DIMENSIONS

| Dimensions | GM-MCG1 | GM-MCG2 | GM-MCG3 | GM-MCG4 | GM-MCG5 | GM-MCG6 | GM-MCG7 | GM-MCG8 |
|---|---|---|---|---|---|---|---|---|
| A | 190 | 300 | 400 | 400 | 550 | 650 | 790 | 800 |
| B | 170 | 305 | 395 | 395 | 410 | 560 | 560 | 650 |
| C | 45 | 63 | 63 | 94 | 94 (63) | 94 | 94 | 140 |
| D | 220 | 360 | 452 | 452 | 467 | 612 | 613 | 723 |
| E | 280 | 415 | 515 | 535 | 690 | 790 | 940 | 960 |
| F | 45 | 45 | 45 | 63 | 63 | 63 | 70 | 70 |
| G | - | - | - | - | - | - | - | - |
| H | 225 | 265 | 265 | 330 | 380 | 480 | 245 | 375 |
| I | 125 | 125 | 125 | 125 | 125 | 125 | 155 | 165 |
| K | 155 | 155 | 155 | 155 | 155 | 155 | 200 | 200 |
| L | - | - | - | - | - | - | - | - |
| M | - | - | - | - | - | - | - | - |
| N (max) | 12-24-172<br>230-400-217 | 12-24-172<br>230-400-217 | 12-24-187<br>230-400-232 | 12-24-187<br>230-400-237 | 187<br>242 | 187<br>257 | 187<br>237 | 197<br>297 |
| O | 1/2 BSP″ | 1/2 BSP″ | 1 BSP″ | 1 BSP″ | 1 BSP″ | 1 BSP 1/2″ | 1 BSP 1/2″ | 1 BSP |

## 5. DIMENSIONS OF THE COOLERS BETWEEN GM-MCG1 AND GM-MCG6

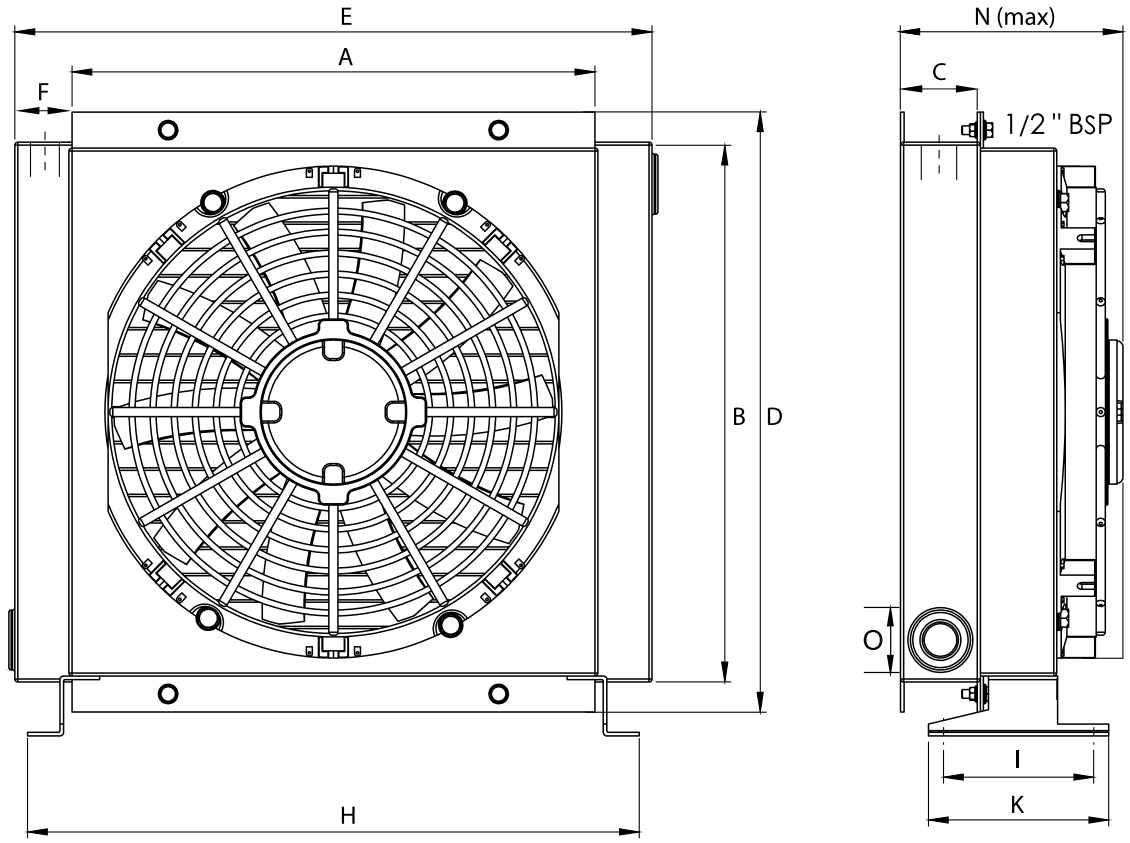

## 6. DIMENSIONS OF THE COOLERS BETWEEN GM-MCG7 AND GM-MCG8

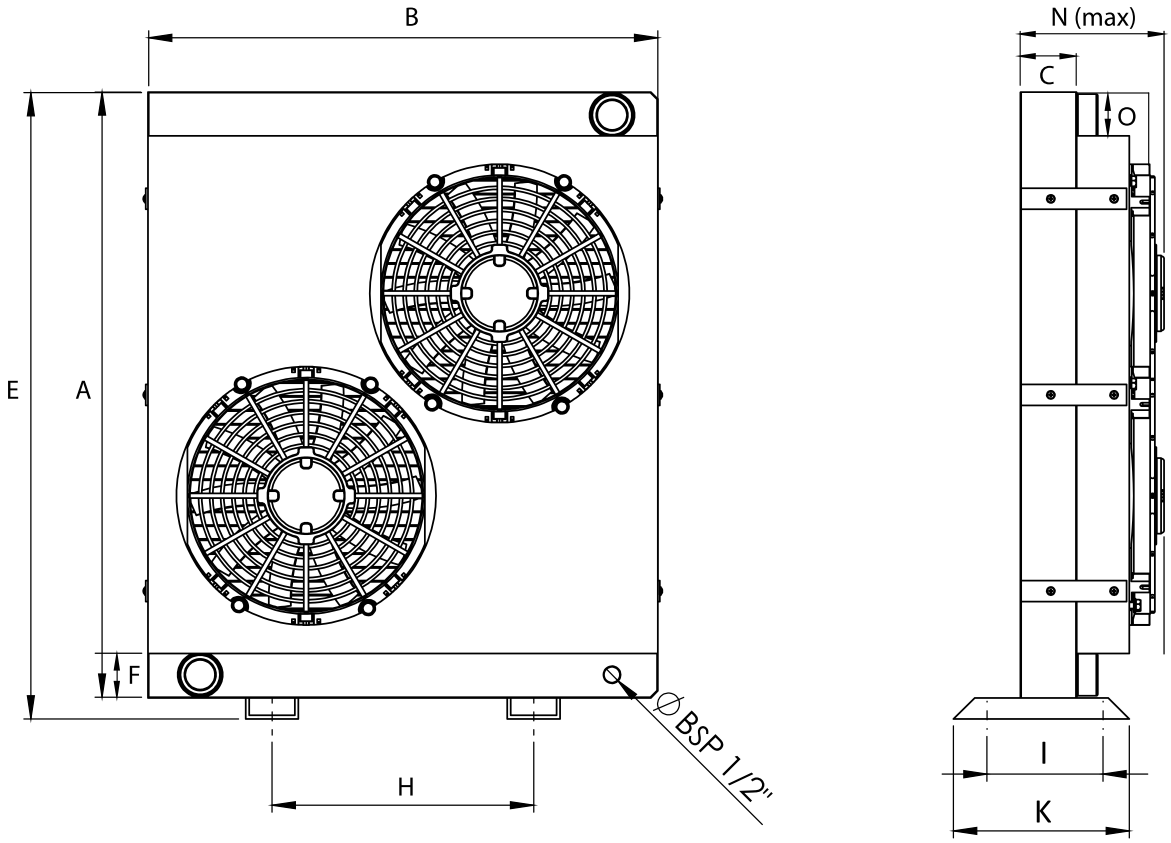

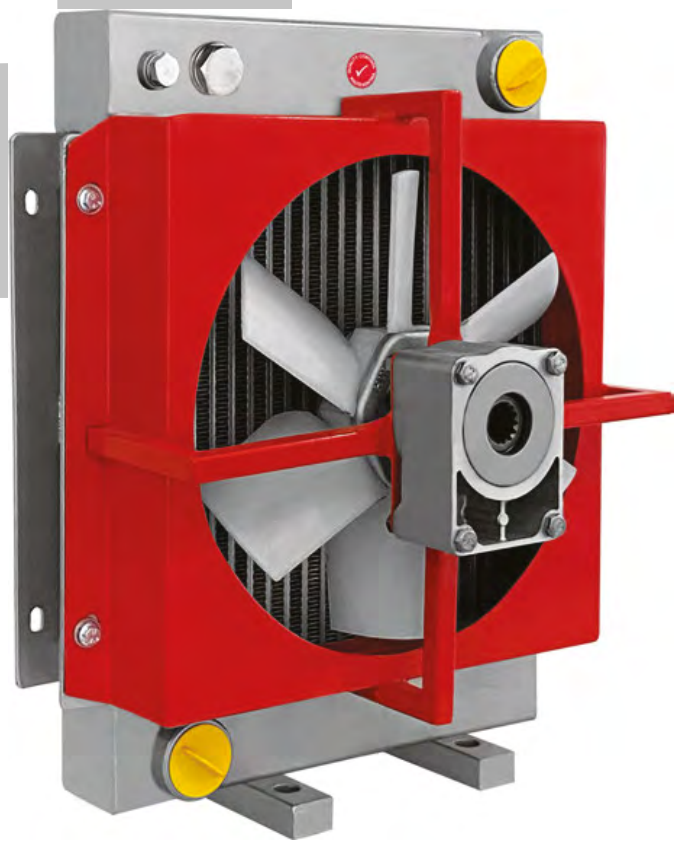

# HYDRAULIC OIL COOLER
# GM-MCH SERIE

# GM-MCH SERIE

GEMMA HYDRAULIC OIL COOLER

## 1. HYDROMOTOR DRIVEN OIL COOLERS

**GM-MCH Serie** is our product line used in all industrial systems.
The hydraulic cooling products we offer are manufactured with high quality standards. From material supply to production and post-production quality control processes, every stage is under strict control and surveillance.

**GM-MCH Serie is used in;**
-Mobile systems,
-Fixed unit applications,

Our products are complete cooling systems for AC-DC applications.





### PROPERTIES

-Test Pressure: 30bar.
-Operating Pressure: 25 bar.
-Used for cooling Synthetic, Mineral Oils, and some liquids.
-Heat in the fluid is cooled through the help of a fan.
-Bar-Plate type cooling pad is used.
-Flexible 6063 aluminum material is used.
-Designed for all kinds of working conditions.
-Ready to use and easy to maintain.
-Has high efficiency and low cost.

## 2. CAPACITY PROPERTIES

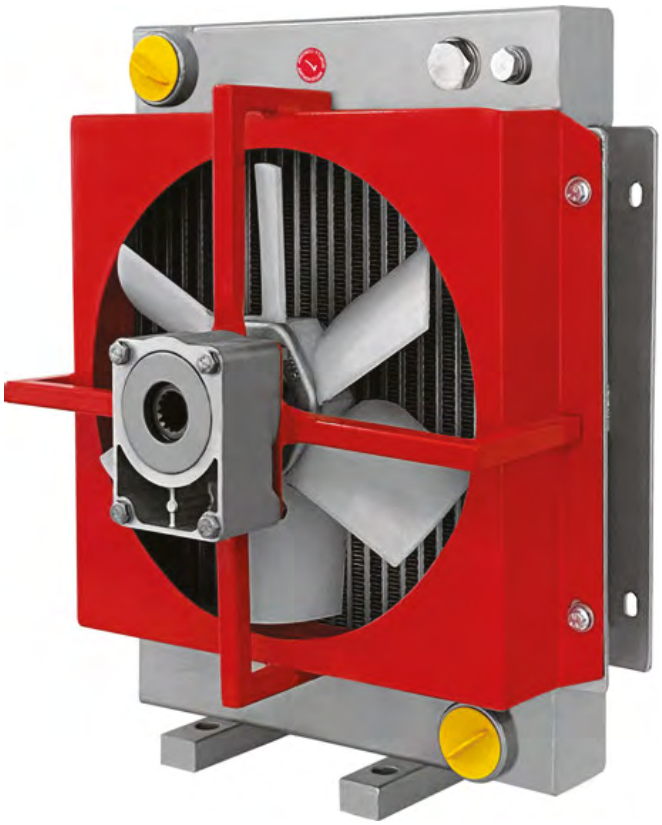

| Product Model | Max. Flowrate (Lt./min) | Capacity (Kcal/h) |
|---|---|---|
| GM-MCH1 | 20 | 1000 |
| GM-MCH2 | 50 | 2500 |
| GM-MCH3 | 75 | 5000 |
| GM-MCH4 | 75 | 5000 |
| GM-MCH5 | 100 | 6000 |
| GM-MCH6 | 120 | 12000 |
| GM-MCH7 | 150 | 22500 |
| GM-MCH8 | 200 | 50000 |
| GM-MCH9 | 250 | 55000 |
| GM-MCH10 | 300 | 60000 |
| GM-MCH11 | 400 | 70000 |

## 3. TECHNICAL DATA

| Model Data | Fan Diameter | Fan Speed | dB(A) 1m | Voltage(V) | kW | Operating Pressure (Bar) |
|---|---|---|---|---|---|---|
| GM-MCH1 | - | - | - | - | - | - |
| GM-MCH2 | 250 | 1500 | 57 | Hydraulic | - | 25 |
| GM-MCH3 | 380 | 1500 | 75 | Hydraulic | - | 25 |
| GM-MCH4 | 380 | 1500 | 77 | Hydraulic | - | 25 |
| GM-MCH5 | 450 | 1500 | 77 | Hydraulic | - | 25 |
| GM-MCH6 | 500 | 1500 | 79 | Hydraulic | - | 25 |
| GM-MCH7 | 500 | 1500 | 79 | Hydraulic | - | 25 |
| GM-MCH8 | 630 | 1000 | 79 | Hydraulic | - | 25 |
| GM-MCH9 | 900 | 1000 | 88 | Hydraulic | - | 15 |
| GM-MCH10 | 900 | 1500 | 98 | Hydraulic | - | 15 |
| GM-MCH11 | 1000 | 1500 | 100 | Hydraulic | - | 15 |

## 4. DIMENSIONS

| Dimensions | GM-MCH1 | GM-MCH2 | GM-MCH3 | GM-MCH4 | GM-MCH5 | GM-MCH6 | GM-MCH7 | GM-MCH8 | GM-MCH9 | GM-MCH10 | GM-MCH11 |
|---|---|---|---|---|---|---|---|---|---|---|---|
| A | 200 | 300 | 400 | 400 | 550 | 650 | 790 | 800 | 1025 | 1025 | 1170 |
| B | 195 | 305 | 395 | 395 | 410 | 560 | 560 | 650 | 010 | 910 | 1200 |
| C | 63 | 63 | 63 | 94 | 94 (63) | 94 | 94 | 140 | 94 | 113 | 140 |
| D | 254 | 360 | 452 | 452 | 467 | 612 | 613 | 723 | 992 | 992 | 1270 |
| E | 315 | 415 | 515 | 535 | 690 | 790 | 940 | 960 | 1350 | 1350 | 1520 |
| F | 45 | 45 | 45 | 63 | 63 | 63 | 70 | 70 | 75 | 75 | 70 |
| G | 65 | 115 | 160 | 160 | 165 | 235 | 235 | 280 | 390 | 390 | 532 |
| H | 80 | 150 | 200 | 200 | 200 | 310 | 310 | 400 | 440 | 440 | 525 |
| I | 140 | 190 | 190 | 240 | 240 | 240 | 240 | 240 | 215 | 215 | 200 |
| K | 200 | 250 | 250 | 300 | 300 | 300 | 300 | 300 | 580 | 580 | 750 |
| L | - | - | - | - | - | - | - | - | - | - | - |
| M | - | - | - | - | - | - | - | - | - | - | - |
| N (max) | 175 | 370 | 400 | 430 | 440 | 450 | 450 | 590 app | 650 app | 790 app | 900 app |
| O | " 1 BSP | " 1 BSP | " 1 BSP | 1/4" 1 BSP | 1/4" 1 BSP (1 BSP) | 1/4" 1 BSP | 1/4" 1 BSP | 1/2" 1 BSP | - | - | - |

## 5. DIMENSIONS OF THE COOLERS BETWEEN GM-MCH1 AND GM-MCH7

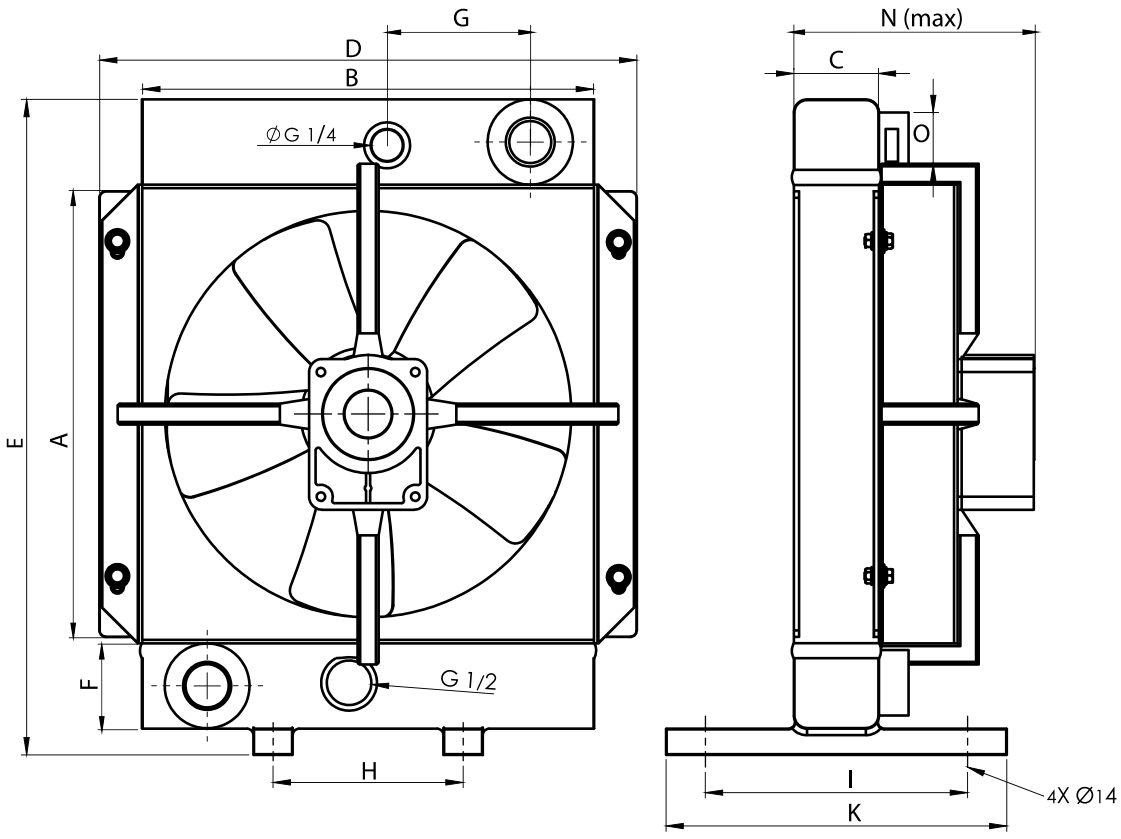

## 6. DIMENSIONS OF THE COOLERS BETWEEN GM-MCH8 AND GM-MCH11

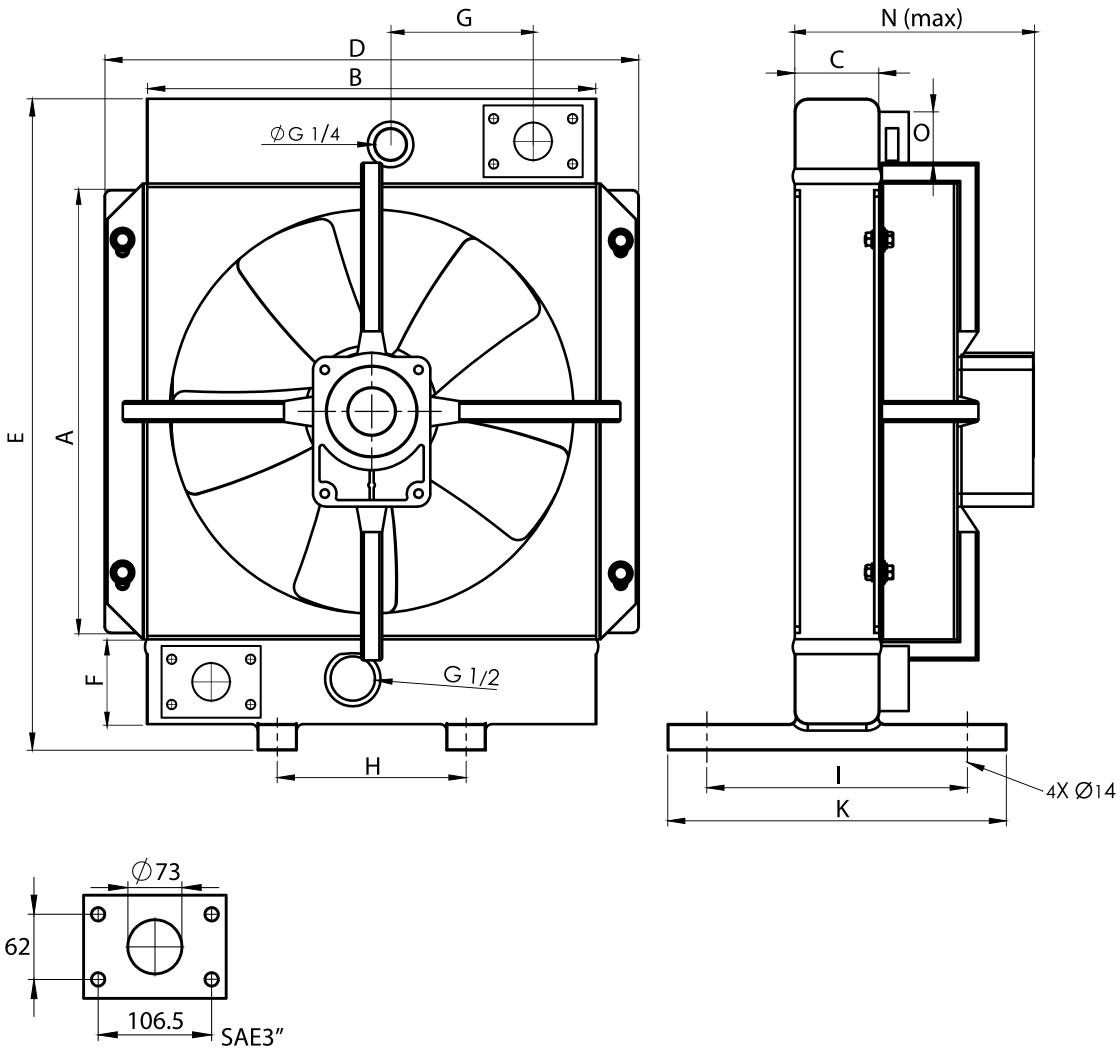





# HYDRAULIC OIL COOLER
# GM-MCM SERIE

# GM-MCM SERIE

GEMMA HYDRAULIC OIL COOLER

## 1. AC-DC MOTOR OIL COOLERS

**GM-MCM Serie** is our product line used in all industrial systems.
The hydraulic cooling products we offer are manufactured with high quality standards. From material supply to production and post-production quality control processes, every stage is under strict control and surveillance.

**GM-MCM Serie is used in;**
-Mobile systems,
-Fixed unit applications,

Our products are complete cooling systems for AC-DC applications.





### PROPERTIES

-Test Pressure: 30bar.
-Operating Pressure: 25 bar.
-Used for cooling Synthetic, Mineral Oils, and some liquids.
-Heat in the fluid is cooled through the help of a fan.
-Bar-Plate type cooling pad is used.
-Flexible 6063 aluminum material is used.
-Designed for all kinds of working conditions.
-Ready to use and easy to maintain.
-Has high efficiency and low cost.

## 2. CAPACITY PROPERTIES



| Product Model | Max. Flowrate (Lt./min) | Capacity (Kcal/h) |
|---|---|---|
| GM-MCM1 | 20 | 1000 |
| GM-MCM2 | 50 | 2500 |
| GM-MCM3 | 75 | 5000 |
| GM-MCM4 | 75 | 5000 |
| GM-MCM5 | 100 | 6000 |
| GM-MCM6 | 120 | 12000 |
| GM-MCM7 | 150 | 22500 |
| GM-MCM8 | 200 | 50000 |
| GM-MCM9 | 250 | 55000 |
| GM-MCM10 | 300 | 60000 |
| GM-MCM11 | 400 | 70000 |

## 3. TECHNICAL DATA

| Model Data | Fan Diameter | Fan Speed | dB(A) 1m | Voltage(V) | kW | Operating Pressure (Bar) |
|---|---|---|---|---|---|---|
| GM-MCM1 | 165-165-175 | 1500-1500-2800 | 79-79-85 | 12-24-230-400 | 0.08-0.08-0.05 | 25 |
| GM-MCM2 | 250-250-250 | 1500-1500-2800 | 75-74-80 | 12-24-230-400 | 0.15-0.15-0.25 | 25 |
| GM-MCM3 | 350-350-350 | 1500-1500-2800 | 76-75-79 | 12-24-230-400 | 0.20-0.25-0.35 | 25 |
| GM-MCM4 | 350-350-350 | 1500-1500-2800 | 76-75-79 | 12-24-230-400 | 0.20-0.25-0.35 | 25 |
| GM-MCM5 | 8 x2-8 x2-200x2 | 1500-1500-2800 | 78-79-76 | 12-24-230-400 | 0.10-0.10-0.09 | 25 |
| GM-MCM6 | 10 x2-10 x2-250x2 | 1500-1500-2800 | 75-74-80 | 12-24-230-400 | 0.15-0.15-0.25 | 25 |
| GM-MCM7 | 14 x2-14 x2-500 | 1500-1500-1300 | 80-80-72 | 12-24-230-400 | 0.25-0.35-0.37 | 25 |
| GM-MCM8 | 630 | 1500 | 90 | 230-400 | 2.2 | 25 |
| GM-MCM9 | 900 | 1000 | 89 | 230-400 | 2.2 | 15 |
| GM-MCM10 | 900 | 1000 | 88 | 230-400 | 3.0 | 15 |
| GM-MCM11 | 1000 | 1000 | 90 | 400 | 7.5 | 15 |

## 4. DIMENSIONS

| Dimensions | GM-MCM1 | GM-MCM2 | GM-MCM3 | GM-MCM4 | GM-MCM5 | GM-MCM6 | GM-MCM7 | GM-MCM8 | GM-MCM9 | GM-MCM10 | GM-MCM11 |
|---|---|---|---|---|---|---|---|---|---|---|---|
| A | 200 | 300 | 400 | 400 | 550 | 650 | 790 | 800 | 1025 | 1025 | 1170 |
| B | 195 | 305 | 395 | 395 | 410 | 560 | 560 | 650 | 010 | 910 | 1200 |
| C | 63 | 63 | 63 | 94 | 94 (63) | 94 | 94 | 140 | 94 | 113 | 140 |
| D | 254 | 360 | 452 | 452 | 467 | 612 | 613 | 723 | 992 | 992 | 1270 |
| E | 315 | 415 | 515 | 535 | 690 | 790 | 940 | 960 | 1350 | 1350 | 1520 |
| F | 45 | 45 | 45 | 63 | 63 | 63 | 70 | 70 | 75 | 75 | 70 |
| G | 65 | 115 | 160 | 160 | 165 | 235 | 235 | 280 | 390 | 390 | 532 |
| H | 80 | 150 | 200 | 200 | 200 | 310 | 310 | 400 | 440 | 440 | 525 |
| I | 140 | 190 | 190 | 240 | 240 | 240 | 240 | 240 | 215 | 215 | 200 |
| K | 200 | 250 | 250 | 300 | 300 | 300 | 300 | 300 | 580 | 580 | 750 |
| L | - | - | - | - | - | - | - | - | - | - | - |
| M | - | - | - | - | - | - | - | - | - | - | - |
| N (max) | 175 | 370 | 400 | 430 | 440 | 450 | 450 | 590 app | 650 app | 790 app | 900 app |
| O | " 1 BSP | " 1 BSP | " 1 BSP | 1/4" 1 BSP | 1/4" 1 BSP (1 BSP) | 1/4" 1 BSP | 1/4" 1 BSP | 1/2" 1 BSP | - | - | - |

## 5. DIMENSIONS OF THE COOLERS BETWEEN GM-MCM1 AND GM-MCM7

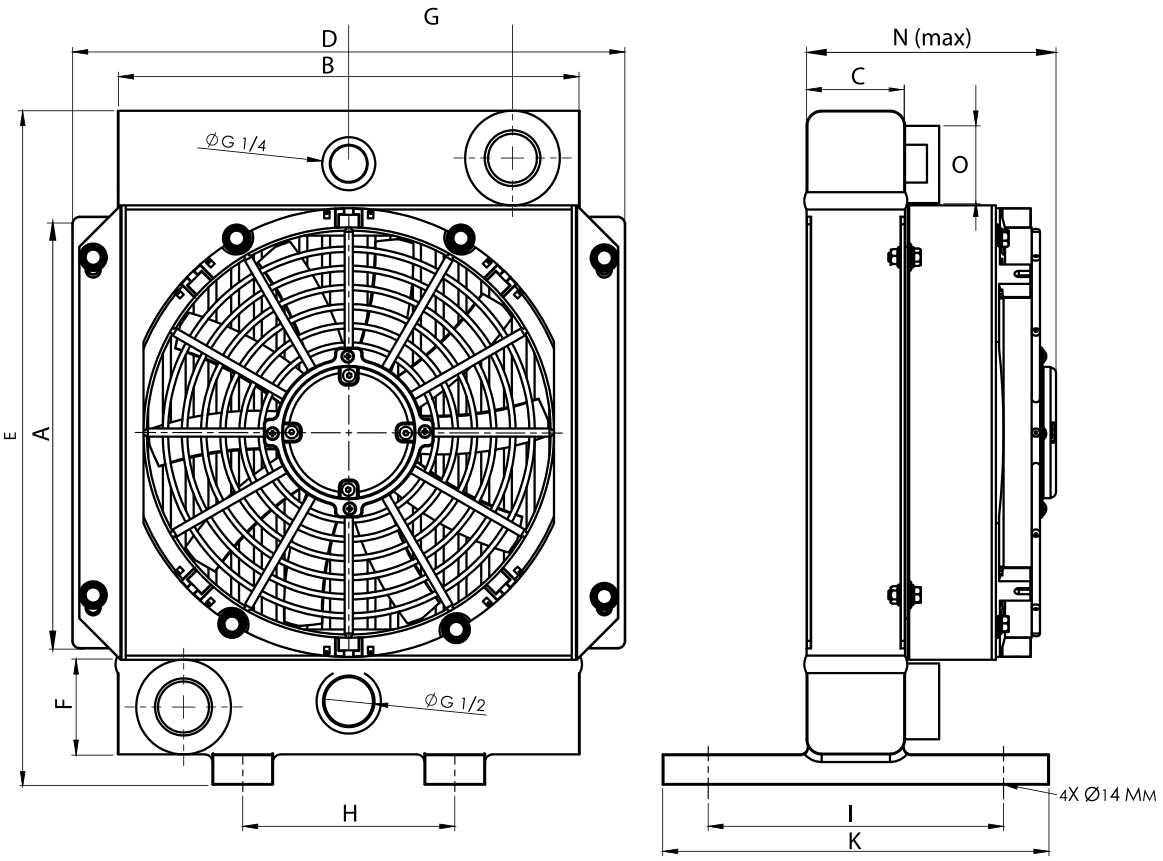

## 6. DIMENSIONS OF THE COOLERS BETWEEN GM-MCM8 AND GM-MCM11

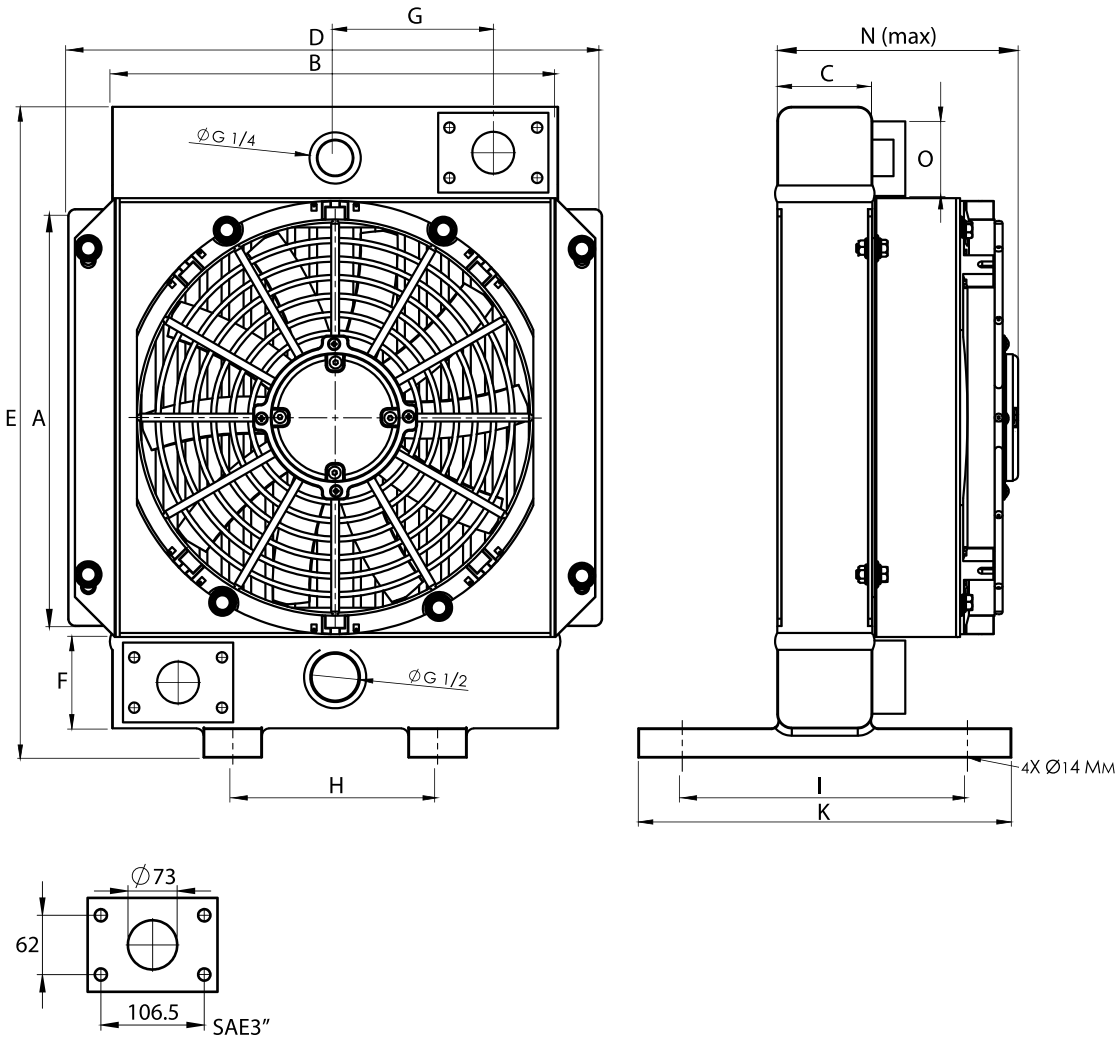



239

# HYDRAULIC FILTERS

FİLTRELER





# HYDRAULIC FILTER

## GEMMA HYDRAULIC RETURN FILTER

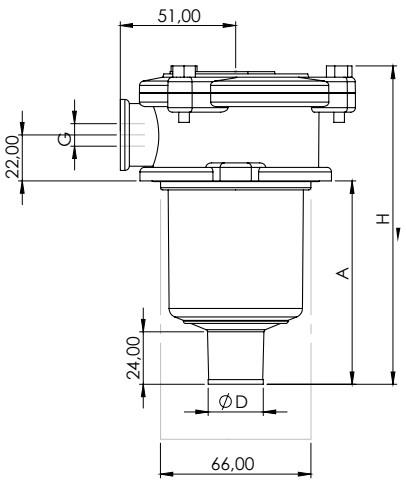


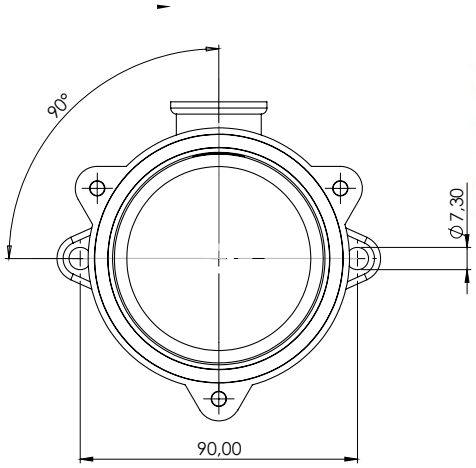




| Product Code | Flow lt/ min | Product Description | A | H | ØD | G | Spare Component Code |
|---|---|---|---|---|---|---|---|
| RTFG05-D12-S25-G01 | 40 | Return Filter (05 Series 40 lt/min 25 µ G 1/2" Connection) | 88 | 140 | 24 | 1/2" | RNFE-0501-S25-B17 |
| RTFG05-D12-M60-G01 | 70 | Return Filter (05 Series 70 lt/min 60 µ G 1/2" Connection) | 88 | 140 | 24 | 1/2" | RNFE-0501-M60-B17 |
| RTFG05-D12-F10-G01 | 40 | Return Filter (05 Series 40 lt/min 10 µ G 1/2" Connection) | 88 | 140 | 24 | 1/2" | RNFE-0501-F10-B17 |

| Series | RTFG05 |
|---|---|

| Filtration Value | F10 | S25 | M60 |
|---|---|---|---|
| | 10 µ | 25 µ | 60 µ |
| | Fiber Glass | Cellulose | Wire Mesh |

| Connection Measurement | D12 |
|---|---|
| | G 1/2" |

| By-Pass Setting Valve | B17 |
|---|---|
| | 1,7 Bar |

| Gemma Standart | G01 |
|---|---|
| Customized | GXX |

| Spare Component Code | Product Description | H2 | ØD1 |
|---|---|---|---|
| RNFE-0501-F10-B17 | Filter Element (05 Series 10 µ) | 50 | 67 |
| RNFE-0501-S25-B17 | Filter Element (05 Series 25 µ) | 50 | 67 |
| RNFE-0501-M60-B17 | Filter Element (05 Series 60 µ) | 50 | 67 |



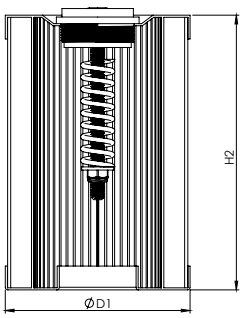

# HYDRAULIC FILTER

## GEMMA HYDRAULIC RETURN FILTER

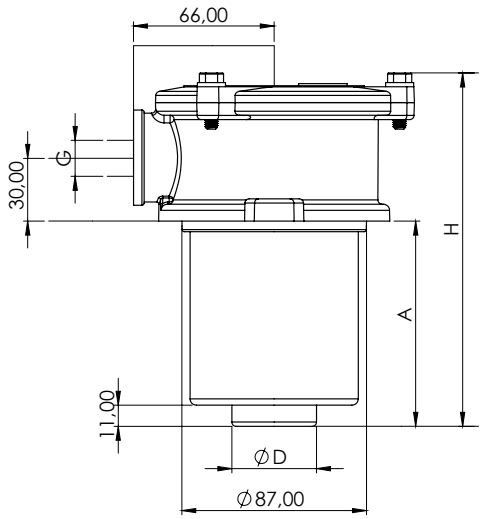


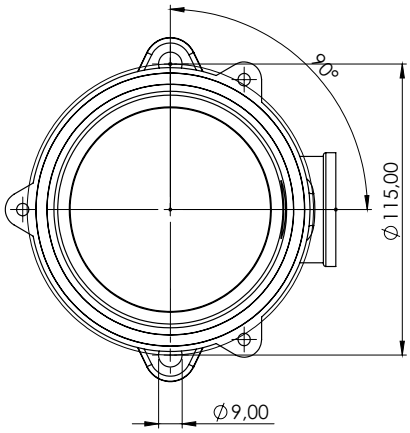




| Product Code | Flow lt/ min | Product Description | A | H | ØD | G | Spare Component Code |
|---|---|---|---|---|---|---|---|
| RTFG10-D12-S25-G01 | 65 | Return Filter (10 Series 65 lt/min 25 µ G 1/2" Connection) | 103 | 172 | 1/2" | 1" | RNFE-1001-S25-B17 |
| RTFG10-D12-M60-G01 | 115 | Return Filter (10 Series 115 lt/min 60 µ G 1/2" Connection) | 103 | 172 | 1/2" | 1" | RNFE-1001-M60-B17 |
| RTFG10-D12-F10-G01 | 65 | Return Filter (10 Series 65 lt/min 10 µ G 1/2" Connection) | 103 | 172 | 1/2" | 1" | RNFE-1001-F10-B17 |
| RTFG11-D15-S25-G01 | 65 | Return Filter (11 Series 65 lt/min 25 µ G 3/4" Connection) | 103 | 172 | 3/4" | 1" | RNFE-1001-S25-B17 |
| RTFG11-D15-M60-G01 | 115 | Return Filter (11 Series 115 lt/min 60 µ G 3/4" Connection) | 103 | 172 | 3/4" | 1" | RNFE-1001-M60-B17 |
| RTFG11-D15-F10-G01 | 65 | Return Filter (11 Series 65 lt/min 10 µ G 3/4" Connection) | 103 | 172 | 3/4" | 1" | RNFE-1001-F10-B17 |
| RTFG20-D15-S25-G01 | 110 | Return Filter (20 Series 110 lt/min 25 µ G 3/4" Connection) | 136 | 205 | 3/4" | 1" | RNFE-2001-S25-B17 |
| RTFG20-D15-M60-G01 | 150 | Return Filter (20 Series 150 lt/min 60 µ G 3/4" Connection) | 136 | 205 | 3/4" | 1" | RNFE-2001-M60-B17 |
| RTFG20-D15-F10-G01 | 110 | Return Filter (20 Series 110 lt/min 10 µ G 3/4" Connection) | 136 | 205 | 3/4" | 1" | RNFE-2001-F10-B17 |
| RTFG21-D18-S25-G01 | 110 | Return Filter (21 Series 110 lt/min 25 µ G 1" Connection) | 136 | 205 | 1" | 1" | RNFE-2001-S25-B17 |
| RTFG21-D18-M60-G01 | 150 | Return Filter (21 Series 150 lt/min 60 µ G 1" Connection) | 136 | 205 | 1" | 1" | RNFE-2001-M60-B17 |
| RTFG21-D18-F10-G01 | 110 | Return Filter (21 Series 110 lt/min 10 µ G 1" Connection) | 136 | 205 | 1" | 1" | RNFE-2001-F10-B17 |
| RTFG22-D18-S25-G01 | 200 | Return Filter (22 Series 200 lt/min 25 µ G 1" Connection) | 220 | 290 | 1" | 1" | RNFE-2201-S25-B17 |
| RTFG22-D18-M60-G01 | 220 | Return Filter (22 Series 220 lt/min 60 µ G 1" Connection) | 220 | 290 | 1" | 1" | RNFE-2201-M60-B17 |
| RTFG22-D18-F10-G01 | 200 | Return Filter (22 Series 200 lt/min 10 µ G 1" Connection) | 220 | 290 | 1" | 1" | RNFE-2201-F10-B17 |

| Series | |
|---|---|
| | RTFG10 |
| | RTFG11 |
| | RTFG20 |
| | RTFG21 |
| | RTFG22 |

| Filtration Value | F10 | S25 | M60 |
|---|---|---|---|
| | 10 µ | 25 µ | 60 µ |
| | Fiber Glass | Cellulose | Wire Mesh |

| Gemma Standart | G01 |
|---|---|
| Customized | GXX |

| Connection Measurement | D12 | D15 | D18 |
|---|---|---|---|
| | G 1/2" | G 3/4" | G 1" |

| Spare Component Code | Product Description | H2 | ØD1 |
|---|---|---|---|
| RNFE-1001-F10-B17 | Filter Element (10 Series 10 µ) | 100 | 70 |
| RNFE-1001-S25-B17 | Filter Element (10 Series 25 µ) | 100 | 70 |
| RNFE-1001-M60-B17 | Filter Element (10 Series 60 µ) | 100 | 70 |
| RNFE-2001-F10-B17 | Filter Element (20 Series 10 µ) | 130 | 70 |
| RNFE-2001-S25-B17 | Filter Element (20 Series 25 µ) | 130 | 70 |
| RNFE-2001-M60-B17 | Filter Element (20 Series 60 µ) | 130 | 70 |
| RNFE-2201-F10-B17 | Filter Element (22 Series 10 µ) | 225 | 70 |
| RNFE-2201-S25-B17 | Filter Element (22 Series 25 µ) | 225 | 70 |
| RNFE-2201-M60-B17 | Filter Element (22 Series 60 µ) | 225 | 70 |

| By-Pass Setting Valve | B17 |
|---|---|
| | 1,7 Bar |



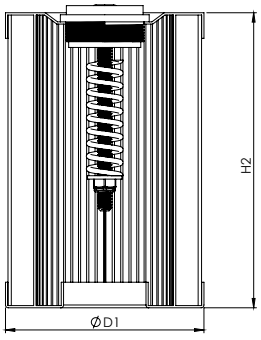

# HYDRAULIC FILTER

## GEMMA HYDRAULIC RETURN FILTER

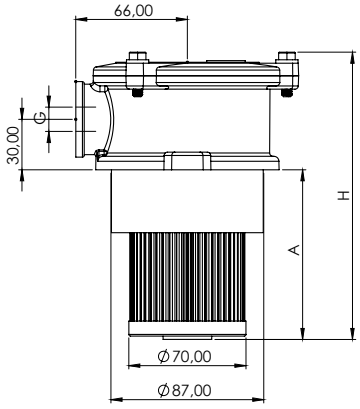


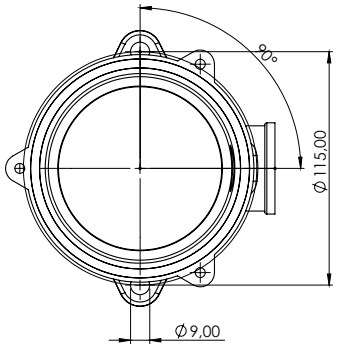




| Product Code | Flow lt/ min | Product Description | A | H | G | Spare Component Code |
|---|---|---|---|---|---|---|
| RTFG30-D12-S25-G01 | 80 | Return Filter (30 Series 80 lt/min 25 µ G 1/2" Connection) | 85 | 155 | 1/2" | RNFE-3001-S25-B17 |
| RTFG30-D12-M60-G01 | 120 | Return Filter (30 Series 120 lt/min 60 µ G 1/2" Connection) | 85 | 155 | 1/2" | RNFE-3001-M60-B17 |
| RTFG31-D15-S25-G01 | 80 | Return Filter (31 Series 80 lt/min 25 µ G 3/4" Connection) | 85 | 155 | 3/4" | RNFE-3001-S25-B17 |
| RTFG31-D15-M60-G01 | 120 | Return Filter (31 Series 120 lt/min 60 µ G 3/4" Connection) | 85 | 155 | 3/4" | RNFE-3001-M60-B17 |
| RTFG32-D15-S25-G01 | 150 | Return Filter (32 Series 150 lt/min 25 µ G 3/4" Connection) | 115 | 185 | 3/4" | RNFE-3201-S25-B17 |
| RTFG32-D15-M60-G01 | 190 | Return Filter (32 Series 190 lt/min 60 µ G 3/4" Connection) | 115 | 185 | 3/4" | RNFE-3201-M60-B17 |
| RTFG34-D18-S25-G01 | 150 | Return Filter (34 Series 150 lt/min 25 µ G 1" Connection) | 115 | 185 | 1" | RNFE-3201-S25-B17 |
| RTFG34-D18-M60-G01 | 190 | Return Filter (34 Series 190 lt/min 60 µ G 1" Connection) | 115 | 185 | 1" | RNFE-3201-M60-B17 |
| RTFG36-D15-S25-G01 | 180 | Return Filter (36 Series 180 lt/min 25 µ G 3/4" Connection) | 165 | 235 | 3/4" | RNFE-3601-S25-B17 |
| RTFG36-D15-M60-G01 | 220 | Return Filter (36 Series 220 lt/min 60 µ G 3/4" Connection) | 165 | 235 | 3/4" | RNFE-3601-M60-B17 |
| RTFG38-D18-S25-G01 | 180 | Return Filter (38 Series 180 lt/min 25 µ G 1" Connection) | 165 | 235 | 1" | RNFE-3601-S25-B17 |
| RTFG38-D18-M60-G01 | 220 | Return Filter (38 Series 220 lt/min 60 µ G 1" Connection) | 165 | 235 | 1" | RNFE-3601-M60-B17 |
| RTFG39-D18-S25-G01 | 235 | Return Filter (39 Series 235 lt/min 25 µ G 1" Connection) | 229 | 299 | 1" | RNFE-3901-S25-B17 |
| RTFG39-D18-M60-G01 | 300 | Return Filter (39 Series 300 lt/min 60 µ G 1" Connection) | 229 | 299 | 1" | RNFE-3901-M60-B17 |

| Series | |
|---|---|
| | RTFH30 |
| | RTFH31 |
| | RTFH32 |
| | RTFH34 |
| | RTFH36 |
| | RTFH38 |
| | RTFH39 |

| Filtration Value | S25 | M60 |
|---|---|---|
| | 25 µ | 60 µ |
| | Cellulose | Wire Mesh |

| Gemma Standart | G01 |
|---|---|
| Customized | GXX |

| Connection Measurement | D12 | D15 | D18 |
|---|---|---|---|
| | G 1/2" | G 3/4" | G 1" |

| By-Pass Setting Valve | B17 |
|---|---|
| | 1,7 Bar |

| Spare Component Code | Product Description | H2 | ØD1 |
|---|---|---|---|
| RNFE-3001-S25-B17 | Filter Element (30 Series 25 µ) | 100 | 70 |
| RNFE-3001-M60-B17 | Filter Element (30 Series 60 µ) | 100 | 70 |
| RNFE-3201-S25-B17 | Filter Element (32 Series 25 µ) | 130 | 70 |
| RNFE-3201-M60-B17 | Filter Element (32 Series 60 µ) | 130 | 70 |
| RNFE-3601-S25-B17 | Filter Element (36 Series 25 µ) | 180 | 70 |
| RNFE-3601-M60-B17 | Filter Element (36 Series 60 µ) | 180 | 70 |
| RNFE-3901-S25-B17 | Filter Element (39 Series 25 µ) | 250 | 70 |
| RNFE-3901-M60-B17 | Filter Element (39 Series 60 µ) | 250 | 70 |
| RNFE-2201-M60-B17 | Filter Element (22 Series 60 µ) | 225 | 70 |



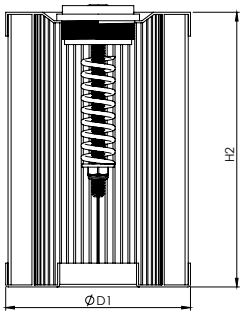

# HYDRAULIC FILTER

## GEMMA HYDRAULIC RETURN FILTER

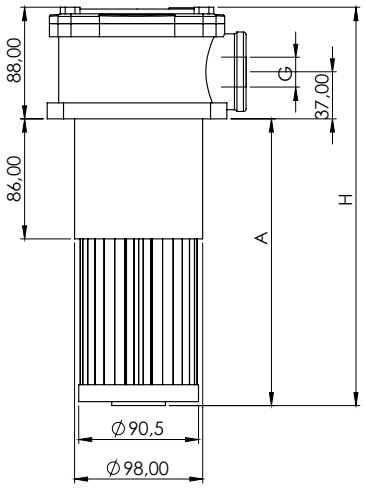


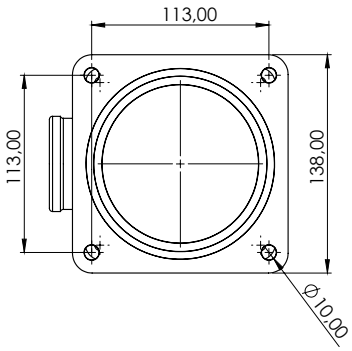




| Product Code | Flow lt/ min | Product Description | A | H | G | Spare Component Code |
|---|---|---|---|---|---|---|
| RTFG40-D18-S25-G01 | 260 | Return Filter (40 Series 260 lt/min 10 µ G 1" Connection) | 235 | 321 | 1" | RNFE-4001-F10-B17 |
| RTFG40-D18-M60-G01 | 340 | Return Filter (41 Series 260 lt/min 25 µ G 1 1/4" Connection) | 235 | 321 | 1 1/4" | RNFE-4001-S25-B17 |
| RTFG40-D18-F10-G01 | 260 | Return Filter (41 Series 340 lt/min 60 µ G 1 1/4" Connection) | 235 | 321 | 1 1/4" | RNFE-4001-M60-B17 |
| RTFG41-D21-S25-G01 | 260 | Return Filter (41 Series 260 lt/min 10 µ G 1 1/4" Connection) | 235 | 321 | 1 1/4" | RNFE-4001-F10-B17 |
| RTFG41-D21-M60-G01 | 340 | Return Filter (43 Series 260 lt/min 25 µ G 1 1/2" Connection) | 235 | 321 | 1 1/2" | RNFE-4001-S25-B17 |
| RTFG41-D21-F10-G01 | 260 | Return Filter (43 Series 340 lt/min 60 µ G 1 1/2" Connection) | 235 | 321 | 1 1/2" | RNFE-4001-M60-B17 |
| RTFG43-D24-S25-G01 | 260 | Return Filter (43 Series 260 lt/min 10 µ G 1 1/2" Connection) | 235 | 321 | 1 1/2" | RNFE-4001-F10-B17 |
| RTFG43-D24-M60-G01 | 340 | Return Filter (50 Series 360 lt/min 25 µ G 1 1/4" Connection) | 445 | 531 | 1 1/4" | RNFE-5001-S25-B17 |
| RTFG43-D24-F10-G01 | 260 | Return Filter (50 Series 480 lt/min 60 µ G 1 1/4" Connection) | 445 | 531 | 1 1/4" | RNFE-5001-M60-B17 |
| RTFG50-D21-S25-G01 | 360 | Return Filter (50 Series 360 lt/min 10 µ G 1 1/4" Connection) | 445 | 531 | 1 1/4" | RNFE-5001-F10-B17 |
| RTFG50-D21-M60-G01 | 480 | Return Filter (51 Series 360 lt/min 25 µ G 1 1/2" Connection) | 445 | 531 | 1 1/2" | RNFE-5001-S25-B17 |
| RTFG50-D21-F10-G01 | 360 | Return Filter (51 Series 480 lt/min 60 µ G 1 1/2" Connection) | 445 | 531 | 1 1/2" | RNFE-5001-M60-B17 |
| RTFG51-D24-S25-G01 | 360 | Return Filter (51 Series 360 lt/min 10 µ G 1 1/2" Connection) | 445 | 531 | 1 1/2" | RNFE-5001-F10-B17 |
| RTFG51-D24-M60-G01 | 480 | Return Filter (39 Series 300 lt/min 60 µ G 1" Connection) | 229 | 299 | 1" | RNFE-3901-M60-B17 |

| Series | |
|---|---|
| | RTFG40 |
| | RTFG41 |
| | RTFG43 |
| | RTFG50 |
| | RTFG51 |

| Filtration Value | F10 | S25 | M60 |
|---|---|---|---|
| | 10 µ | 25 µ | 60 µ |
| | Fiber Glass | Cellulose | Wire Mesh |

| Gemma Standart | G01 |
|---|---|
| Customized | GXX |

| By-Pass Setting Valve | B17 |
|---|---|
| | 1,7 Bar |

| Connection Measurement | D18 | D21 | D24 |
|---|---|---|---|
| | G 1" | G 1 1/4" | G 1 1/2" |

| Spare Component Code | Product Description | H2 | ØD1 |
|---|---|---|---|
| RNFE-4001-S25-B17 | Filter Element (40 Series 25 µ) | 250 | 91 |
| RNFE-4001-M60-B17 | Filter Element (40 Series 60 µ) | 250 | 91 |
| RNFE-4001-F10-B17 | Filter Element (40 Series 10 µ) | 250 | 91 |
| RNFE-5001-S25-B17 | Filter Element (50 Series 25 µ) | 453 | 91 |
| RNFE-5001-M60-B17 | Filter Element (50 Series 60 µ) | 453 | 91 |
| RNFE-5001-F10-B17 | Filter Element (50 Series 10 µ) | 453 | 91 |



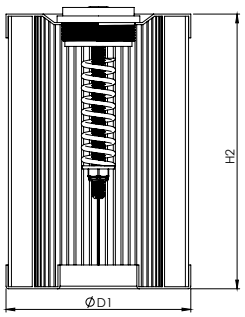

# HYDRAULIC FILTER

## GEMMA HYDRAULIC RETURN FILTER

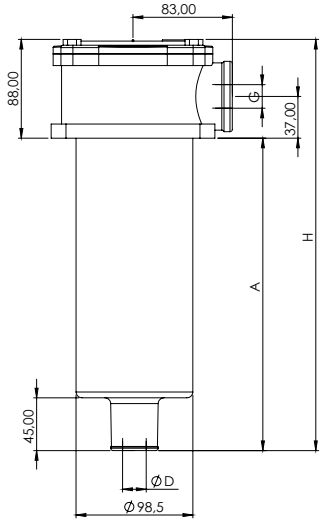


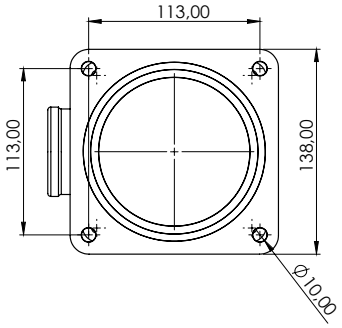




| Product Code | Flow lt/ min | Product Description | A | H | G | ØD | Spare Component Code |
|---|---|---|---|---|---|---|---|
| RTFG60-D18-S25-G01 | 260 | Return Filter (60 Series 260 lt/min 25 µ G 1" Connection) | 285 | 369 | 1" | 31 | RNFE-6001-S25-B17 |
| RTFG60-D18-M60-G01 | 340 | Return Filter (60 Series 340 lt/min 60 µ G " Connection) | 285 | 369 | 1" | 31 | RNFE-6001-M60-B17 |
| RTFG60-D18-F10-G01 | 260 | Return Filter (60 Series 260 lt/min 10 µ G 1" Connection) | 285 | 369 | 1" | 31 | RNFE-6001-F10-B17 |
| RTFG61-D21-S25-G01 | 260 | Return Filter (61 Series 260 lt/min 25 µ G 1 1/4" Connection) | 285 | 369 | 1 1/4" | 31 | RNFE-6001-S25-B17 |
| RTFG61-D21-M60-G01 | 340 | Return Filter (61 Series 340 lt/min 60 µ G 1 1/4" Connection) | 285 | 369 | 1 1/4" | 31 | RNFE-6001-M60-B17 |
| RTFG61-D21-F10-G01 | 260 | Return Filter (61 Series 260 lt/min 10 µ G 1 1/4" Connection) | 285 | 369 | 1 1/4" | 31 | RNFE-6001-F10-B17 |
| RTFG62-D24-S25-G01 | 260 | Return Filter (62 Series 260 lt/min 25 µ G 1 1/2" Connection) | 285 | 369 | 1 1/2" | 31 | RNFE-6001-S25-B17 |
| RTFG62-D24-M60-G01 | 340 | Return Filter (62 Series 340 lt/min 60 µ G 1 1/2" Connection) | 285 | 369 | 1 1/2" | 31 | RNFE-6001-M60-B17 |
| RTFG62-D24-F10-G01 | 260 | Return Filter (62 Series 260 lt/min 10 µ G 1 1/2" Connection) | 285 | 369 | 1 1/2" | 31 | RNFE-6001-F10-B17 |

| Series | |
|---|---|
| | RTFG60 |
| | RTFG61 |
| | RTFG62 |

| Filtration Value | | | |
|---|---|---|---|
| | F10 | S25 | M60 |
| | 10 µ | 25 µ | 60 µ |
| | Fiber Glass | Cellulose | Wire Mesh |

| Gemma Standart | |
|---|---|
| Customized | GXX |

| Connection Measurement | D18 | D21 | D24 |
|---|---|---|---|
| | G 1" | G 1 1/4" | G 1 1/2" |

| By-Pass Setting Valve | B17 |
|---|---|
| | 1,7 Bar |

| Spare Component Code | Product Description | H2 | ØD1 |
|---|---|---|---|
| RNFE-6001-S25-B17 | Filter Element (60 Series 25 µ) | 250 | 90 |
| RNFE-6001-M60-B17 | Filter Element (60 Series 60 µ) | 250 | 90 |
| RNFE-6001-F10-B17 | Filter Element (60 Series 10 µ) | 250 | 90 |



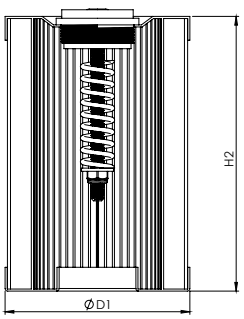

# HYDRAULIC FILTER

## GEMMA HYDRAULIC RETURN FILTER

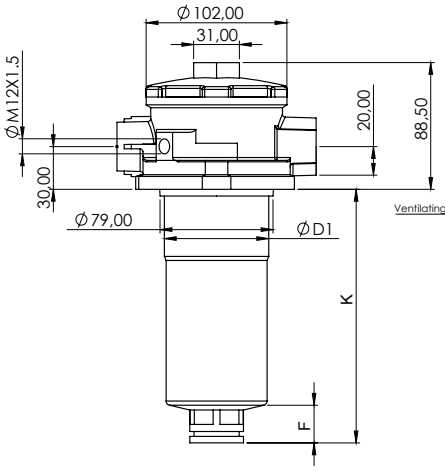


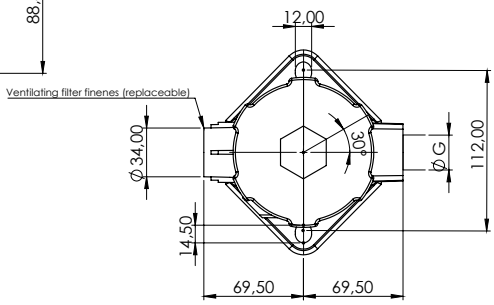




| Product Code | Flow lt/ min | Product Description | F | K | ØD1 | ØD | Spare Component Code |
|---|---|---|---|---|---|---|---|
| RTFG100-D15-S25-G01 | 80 | Return Filter (100 Series 80 lt/mın 25 µ G 3/4" Connection) | 24 | 176 | 73 | 3/4" | RNFE-10001-S25-B17 |
| RTFG100-D15-M60-G01 | 110 | Return Filter (100 Series 110 lt/mın 60 µ G 3/" Connection) | 24 | 176 | 73 | 3/4" | RNFE-10001-M60-B17 |
| RTFG100-D15-F10-G01 | 80 | Return Filter (100 Series 80 lt/mın 10 µ G 3/4" Connection) | 24 | 176 | 73 | 3/4" | RNFE-10001-F10-B17 |
| RTFG101-D18-S25-G01 | 80 | Return Filter (101 Series 80 lt/mın 25 µ G 1" Connection) | 24 | 176 | 73 | 1" | RNFE-10001-S25-B17 |
| RTFG101-D18-M60-G01 | 110 | Return Filter (101 Series 110 lt/mın 60 µ G 1" Connection) | 24 | 176 | 73 | 1" | RNFE-10001-M60-B17 |
| RTFG101-D18-F10-G01 | 80 | Return Filter (101 Series 80 lt/mın 10 µ G 1" Connection) | 24 | 176 | 73 | 1" | RNFE-10001-F10-B17 |
| RTFG102-D18-S25-G01 | 115 | Return Filter (102 Series 115 lt/mın 25 µ G 1" Connection) | 24 | 277 | 73 | 1" | RNFE-10002-S25-B17 |
| RTFG102-D18-M60-G01 | 135 | Return Filter (102 Series 135 lt/mın 60 µ G 1" Connection) | 24 | 277 | 73 | 1" | RNFE-10002-M60-B17 |
| RTFG102-D18-F10-G01 | 115 | Return Filter (102 Series 115 lt/mın 10 µ G 1" Connection) | 24 | 277 | 73 | 1" | RNFE-10002-F10-B17 |

| Series | RTFG100 |
|---|---|
| | RTFG101 |
| | RTFG102 |

| Filtration Value | F10 | S25 | M60 |
|---|---|---|---|
| | 10 µ | 25 µ | 60 µ |
| | Fiber Glass | Cellulose | Wire Mesh |

| Gemma Standart | G01 |
|---|---|
| Customized | GXX |

| Connection Measurement | D15 | D18 |
|---|---|---|
| | G 3/4'' | G 1'' |

| By-Pass Setting Valve | B17 |
|---|---|
| | 1,7 Bar |

| Spare Component Code | Product Description | H2 | ØD1 | ØA2 |
|---|---|---|---|---|
| RNFE-10001-S25-B17 | Filter Element (100 Series 25 µ) | 207 | 61 | 28 |
| RNFE-10001-M60-B17 | Filter Element (100 Series 60 µ) | 207 | 61 | 28 |
| RNFE-10001-F10-B17 | Filter Element (100 Series 10 µ) | 207 | 61 | 28 |
| RNFE-10002-S25-B17 | Filter Element (100 Series 25 µ) | 295 | 61 | 28 |
| RNFE-10002-M60-B17 | Filter Element (100 Series 60 µ) | 295 | 61 | 28 |
| RNFE-10002-F10-B17 | Filter Element (100 Series 10 µ) | 295 | 61 | 28 |

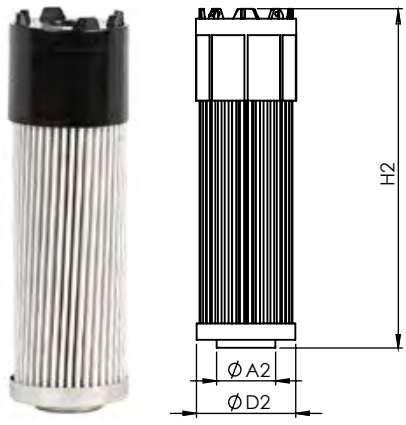

# HYDRAULIC SUCTION FILTER

## GEMMA HYDRAULIC SUCTION FILTER

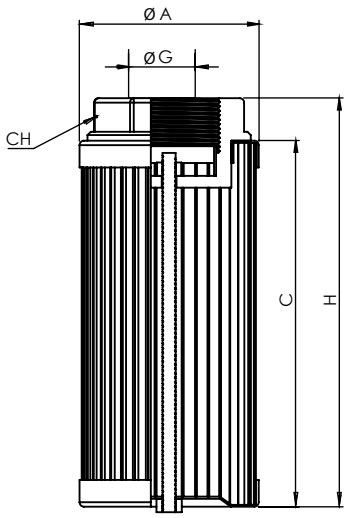




| Product Code | Flow lt/ min | Product Description | ØG | ØA | C | H | CH |
|---|---|---|---|---|---|---|---|
| SFTG05-D06-149-G01 | 5 | Suction Filter (5 lt/min 149 µ G 1/4" Connection) | 1/4" | 30 | 80 | 87 | 16 |
| SFTG15-D18-149-G01 | 15 | Suction Filter (15 lt/min 149 µ G 1" Connection) | 1" | 59 | 64 | 88 | 42 |
| SFTG25-D18-149-G01 | 25 | Suction Filter (25 lt/min 149 µ G 1" Connection) | 1" | 59 | 100 | 124 | 42 |
| SFTG45-D18-149-G01 | 45 | Suction Filter (45 lt/min 149 µ G 1" Connection) | 1" | 59 | 140 | 164 | 42 |
| SFTG65-D24-149-G01 | 65 | Suction Filter (65 lt/min 149 µ G 1 1/2" Connection) | 1 1/2" | 82 | 110 | 134 | 62 |
| SFTG90-D24-149-G01 | 90 | Suction Filter (90 lt/min 149 µ G 1 1/2" Connection) | 1 1/2" | 82 | 163 | 188 | 62 |
| SFTG125-D24-149-G01 | 125 | Suction Filter (125 lt/min 149 µ G 1 1/2" Connection) | 1 1/2" | 82 | 200 | 222 | 62 |
| SFTG180-D24-149-G01 | 180 | Suction Filter (180 lt/min 149 µ G 1 1/2" Connection) | 1 1/2" | 82 | 240 | 263 | 62 |
| SFTG225-D27-149-G01 | 225 | Suction Filter (225 lt/min 149 µ G 2" Connection) | 2" | 130 | 165 | 192 | 80 |
| SFTG300-D27-149-G01 | 300 | Suction Filter (300 lt/min 149 µ G 2" Connection) | 2" | 130 | 200 | 222 | 80 |
| SFTG500-D27-149-G01 | 500 | Suction Filter (500 lt/min 149 µ G 2" Connection) | 2" | 130 | 250 | 282 | 80 |
| SFTG501-D30-149-G01 | 500 | Suction Filter (500 lt/min 149 µ G 2 1/2" Connection) | 2 1/2" | 130 | 250 | 282 | 86 |
| SFTG750-D33-149-G01 | 750 | Suction Filter (750 lt/min 149 µ G 3" Connection) | 3" | 182 | 250 | 271 | 98 |
| SFTG1400-D33-149-G01 | 1400 | Suction Filter (1400 lt/min 149 µ G 3" Connection) | 3" | 182 | 500 | 523 | 98 |

| Connection Measurement | D06 | D18 | D24 | D27 | D30 | D33 | D36 |
|---|---|---|---|---|---|---|---|
| | G 1/4" | G 1" | G 1 1/2" | G 2" | G 2 1/2" | 3" | 4" |

| By-Pass Setting Valve | B17 |
|---|---|
| | 1,7 Bar |

| Gemma Standart | G01 |
|---|---|
| Customized | GXX |

| Filtration Value | 149 |
|---|---|
| | Metal Mesh / 149 µ |

# HYDRAULIC SPIN-ON FILTER

## GEMMA HYDRAULIC SPIN-ON FILTER

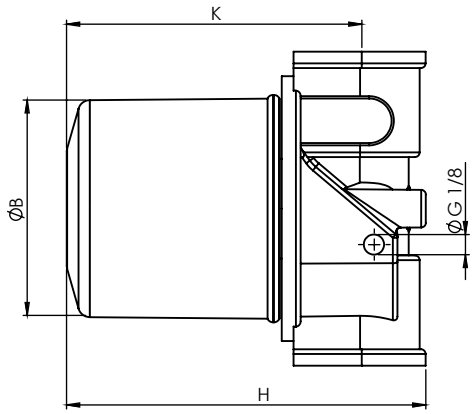




| Product Code | Flow lt/ min | Product Description | H | ØB | K | Spare Component Code |
|---|---|---|---|---|---|---|
| SOFG10-D12-S25-G01 | 35 | Spin On Filter (10 Series 35 lt/min 25 µ G 1/2'' Connection) | 140 | 94 | 118 | SOFE-S1001-S25-B17 |
| SOFG20-D15-F10-G01 | 55 | Spin On Filter (20 Series 55 lt/min 10 µ G 3/4'' Connection) | 183 | 94 | 163 | SOFE-S2001-F10-B17 |
| SOFG20-D15-S25-G01 | 65 | Spin On Filter (20 Series 65 lt/min 25 µ G 3/4'' Connection) | 183 | 94 | 163 | SOFE-S2001-S25-B17 |
| SOFG21-D15-F10-G01 | 70 | Spin On Filter (21 Series 70 lt/min 10 µ G 3/4'' Connection) | 183 | 94 | 163 | SOFE-S2101-F10-B17 |
| SOFG21-D15-S25-G01 | 80 | Spin On Filter (21 Series 80 lt/min 25 µ G 3/4'' Connection) | 183 | 94 | 163 | SOFE-S2101-S25-B17 |
| SOFG30-D18-F10-G01 | 65 | Spin On Filter (30 Series 65 lt/min 10 µ G 1'' Connection) | 258 | 94 | 238 | SOFE-S3001-F10-B17 |
| SOFG30-D18-S25-G01 | 75 | Spin On Filter (30 Series 75 lt/min 25 µ G 1'' Connection) | 258 | 94 | 238 | SOFE-S3001-S25-B17 |
| SOFG31-D18-F10-G01 | 80 | Spin On Filter (31 Series 80 lt/min 10 µ G 1'' Connection) | 258 | 94 | 238 | SOFE-S3101-F10-B17 |
| SOFG31-D18-S25-G01 | 90 | Spin On Filter (31 Series 90 lt/min 25 µ G 1'' Connection) | 258 | 94 | 238 | SOFE-S3101-S25-B17 |
| SOFG40-D21-F10-G01 | 115 | Spin On Filter (40 Series 115 lt/min 10 µ G 1 1/4'' Connection) | 245 | 127 | 218 | SOFE-S4001-F10-B17 |
| SOFG40-D21-S25-G01 | 150 | Spin On Filter (40 Series 150 lt/min 25 µ G 1 1/4'' Connection) | 245 | 127 | 218 | SOFE-S4001-S25-B17 |
| SOFG50-D21-S25-G01 | 200 | Spin On Filter (50 Series 200 lt/min 25 µ G 1 1/4'' Connection) | 270 | 135 | 342 | SOFE-S5001-S25-B17 |

| Connection Measurement | D12 | D15 | D18 | D21 |
|---|---|---|---|---|
| | G 1/2 '' | G 3/4 '' | G 1'' | G 1 1/4 '' |

| By-Pass Setting Valve | B17 |
|---|---|
| | 1,7 Bar |

| Gemma Standart | G01 |
|---|---|
| Customized | GXX |

| Filtration Value | F10 | S25 |
|---|---|---|
| | 10 µ | 25 µ |
| | Fiber Glass | Cellulose |

# HYDRAULIC SPIN-ON FILTER

## GEMMA HYDRAULIC SPIN-ON FILTER

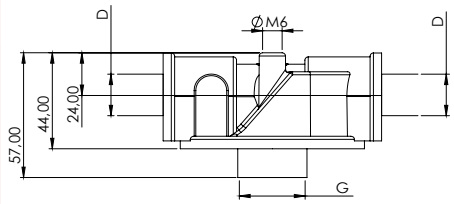


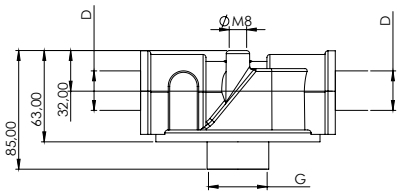


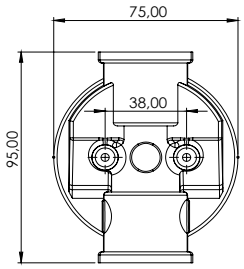


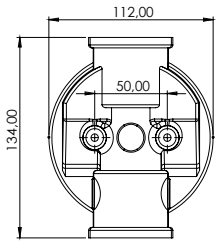




| Product Code | Product Description | ØG | ØD |
|---|---|---|---|
| SCGH-1001 | Spare Component Head | 3/4" x 16 | G 1/2" |
| SCGH-2001 | Spare Component Head | 1" x 12 | G 3/4" |
| SCGH-2101 | Spare Component Head | 1" x 12 | G 3/4" |
| SCGH-3001 | Spare Component Head | 1" x 12 | G 1" |
| SCGH-3101 | Spare Component Head | 1" x 12 | G 1" |
| SCGH-4001 | Spare Component Head | 1 1/4" x 12 | G 1 1/4" |
| SCGH-5001 | Spare Component Head | 1 1/2" x 16 | G 1 1/4" |

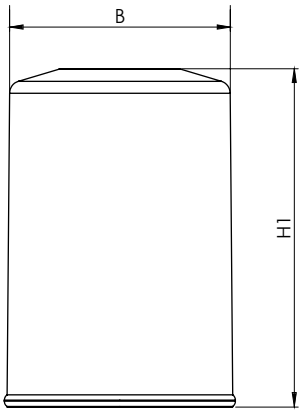


| Spare Component Code | Product Description | Spare Compenent Connection Measurement UNF | H1 | ØB |
|---|---|---|---|---|
| SOFE-S1001-S25-B17 | Filter Element (10 Series 25 µ) | 3/4''- 16 UNF | 94 | 94 |
| SOFE-S2001-S25-B17 | Filter Element (20 Series 25 µ) | 1'' - 12 UNF | 137 | 94 |
| SOFE-S2001-F10-B17 | Filter Element (20 Series 10 µ) | 1'' - 12 UNF | 137 | 94 |
| SOFE-S2101-S25-B17 | Filter Element (21 Series 25 µ) | 1'' - 12 UNF | 207 | 94 |
| SOFE-S2101-F10-B17 | Filter Element( 21 Series 10 µ) | 1'' - 12 UNF | 207 | 94 |
| SOFE-S3001-S25-B17 | Filter Element (30 Series 25 µ) | 1'' - 12 UNF | 137 | 94 |
| SOFE-S3001-F10-B17 | Filter Element (30 Series 10 µ) | 1'' - 12 UNF | 137 | 94 |
| SOFE-S3101-S25-B17 | Filter Element (31 Series 25 µ) | 1'' - 12 UNF | 207 | 94 |
| SOFE-S3101-F10-B17 | Filter Element (31 Series 10 µ) | 1'' - 12 UNF | 207 | 94 |
| SOFE-S4001-S25-B17 | Filter Element (40 Series 25 µ) | 1 1/4''-12 UNF | 178 | 127 |
| SOFE-S4001-F10-B17 | Filter Element (40 Series 10 µ) | 1 1/4''-12 UNF | 178 | 127 |
| SOFE-S5001-S25-B17 | Filter Element (50 Series 25 µ) | 1 1/4''-12 UNF | 303 | 135 |



# TEMPERATURE and OIL INDICATORS

## GEMMA TEMPERATURE and OIL INDICATOR

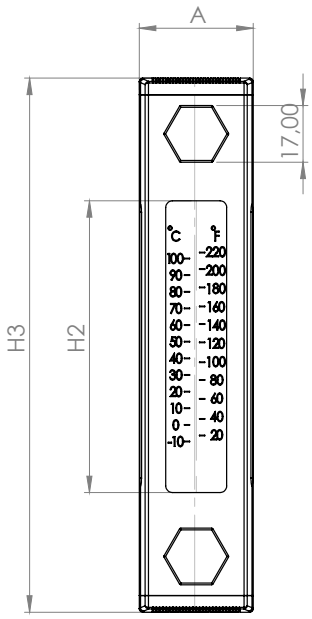


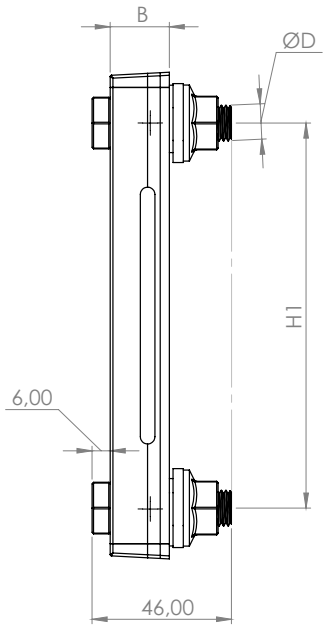




| Product Code | Flow lt/ min | Product Description | A | B | H1 | H2 | H3 | ØD |
|---|---|---|---|---|---|---|---|---|
| GTOI-076-T10-G01 | 35 | 76 mm M10 Temperature and Oil Indicator With Degree | 34 | 21 | 76 | 36 | 109 | 10 |
| GTOI-076-W10-G01 | 55 | 76 mm M10 Temperature and Oil Indicator Without Degree | 34 | 21 | 76 | 36 | 109 | 10 |
| GTOI-076-T12-G01 | 65 | 76 mm M12 Temperature and Oil Indicator With Degree | 34 | 21 | 76 | 36 | 109 | 12 |
| GTOI-076-W12-G01 | 70 | 76 mm M12 Temperature and Oil Indicator Without Degree | 34 | 21 | 76 | 36 | 109 | 12 |
| GTOI-127-T10-G01 | 80 | 127 mm M10 Temperature and Oil Indicator With Degree | 34 | 21 | 127 | 88 | 160 | 10 |
| GTOI-127-W10-G01 | 65 | 127 mm M10 Temperature and Oil Indicator Without Degree | 34 | 21 | 127 | 88 | 160 | 10 |
| GTOI-127-T12-G01 | 75 | 127 mm M12 Temperature and Oil Indicator With Degree | 34 | 21 | 127 | 88 | 160 | 12 |
| GTOI-127-W12-G01 | 80 | 127 mm M12 Temperature and Oil Indicator Without Degree | 34 | 21 | 127 | 88 | 160 | 12 |
| GTOI-254-T12-G01 | 90 | 254 mm M12 Temperature and Oil Indicator With Degree | 35 | 27 | 254 | 200 | 288 | 12 |
| GTOI-254-W12-G01 | 115 | 254 mm M12 Temperature and Oil Indicator Without Degree | 35 | 27 | 254 | 200 | 288 | 12 |

| ORDERING AND OPTION CHART | GTOI | | |
|---|---|---|---|
| SERIES | 076 mm | 127 mm | 254 mm |
| SIZE & LENGTH | T | W | |
| ACCESSORIES | With Thermometer | Without Thermometer | |
| CONNECTION SIZE | 10 | 12 | |
| | M10 | M12 | |

| Gemma Standart | G01 |
|---|---|
| Customized | GXX |

# ALUMINUM OIL LEVEL GAUGES

## GEMMA ALUMINUM OIL LEVEL GAUGES

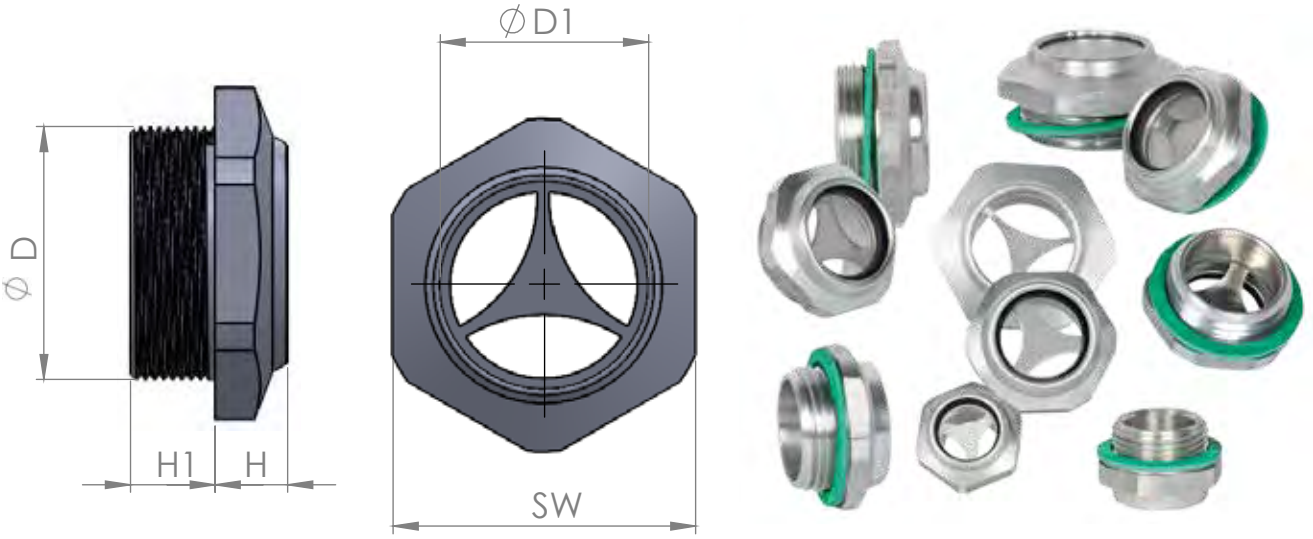


| Product Code | Product Description | ØD | H | H1 | SW | ØD1 |
|---|---|---|---|---|---|---|
| GAOL-D09-K-G01 | 3/8" Aluminum Oil Level Gauge | G 3/8" | 10,5 | 9 | 22 | 12 |
| GAOL-D12-K-G01 | 1/2" Aluminum Oil Level Gauge | G 1/2" | 12,5 | 8,5 | 27 | 17,5 |
| GAOL-D15-K-G01 | 3/4" Aluminum Oil Level Gauge | G 3/4" | 12,5 | 10 | 32 | 20 |
| GAOL-D18-K-G01 | 1" Aluminum Oil Level Gauge | G 1" | 13 | 10 | 40 | 27 |
| GAOL-D21-K-G01 | 1 1/4" Aluminum Oil Level Gauge | G 1 1/4" | 14 | 12 | 50 | 30,5 |
| *GAOL-D06-K-G01 | 1/4" Aluminum Oil Level Gauge | G 1/4" | | | | |
| *GAOL-D24-K-G01 | 1 1/2" Aluminum Oil Level Gauge | G 1 1/2" | | | | |

| ORDERING AND OPTION CHART | GAOL | | | | | | |
|---|---|---|---|---|---|---|---|
| SERIES | D06 | D09 | D12 | D15 | D18 | D21 | D24 |
| SIZE & LENGTH | 1/4'' | 3/8'' | 1/2'' | 3/4'' | 1'' | 1 1/4'' | 1 1/2'' |
| | | | | | | | |
| FLAT SEAL | K | B | | | | | |
| | | Klingrite | Bond-ed Seal | (Op-tion) | | | |

| Gemma Standart | G01 |
|---|---|
| Customized | GXX |

** Please get in contact with us for details.*

# POLYCARBONATE OIL INDICATORS

## GEMMA POLYCARBONATE OIL INDICATORS

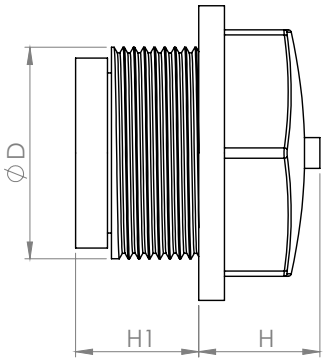


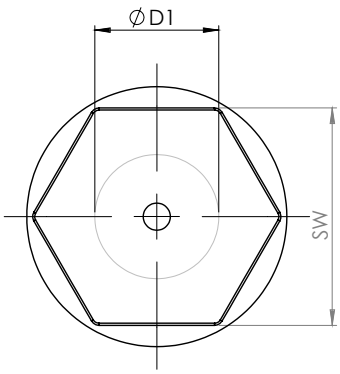




| Product Code | Product Description | ØD | H | H1 | SW | ØD1 |
|---|---|---|---|---|---|---|
| GPOL-D09-K-G01 | 3/8" Polycarbonate Oil Level Indicator | G 3/8" | 8 | 12,5 | 18 | 10 |
| GPOL-D12-K-G01 | 1/2" Polycarbonate Oil Level Indicator | G 1/2" | 10 | 12,5 | 24 | 14 |
| GPOL-D15-K-G01 | 3/4" Polycarbonate Oil Level Indicator | G 3/4" | 10 | 13,5 | 30 | 19 |
| GPOL-D18-K-G01 | " Polycarbonate Oil Level Indicator | G 1" | 10 | 15 | 36 | 23,5 |

| ORDERING AND OPTION CHART | GPOL | | | | | |
|---|---|---|---|---|---|---|
| SERIES | D09 | D12 | D15 | D18 | D21 | D24 |
| SIZE & LENGTH | 3/8" | 1/2" | 3/4" | 1" | 1 1/4'' | 1 1/2'' |
| | | | | | | |
| FLAT SEAL | | K | B | | | |
| | | Klingrite | Bonded Seal | (Option) | | |

| Gemma Standart | G01 |
|---|---|
| Customized | GXX |

# FILLING BREATHERS

## GEMMA FILLING BREATHERS

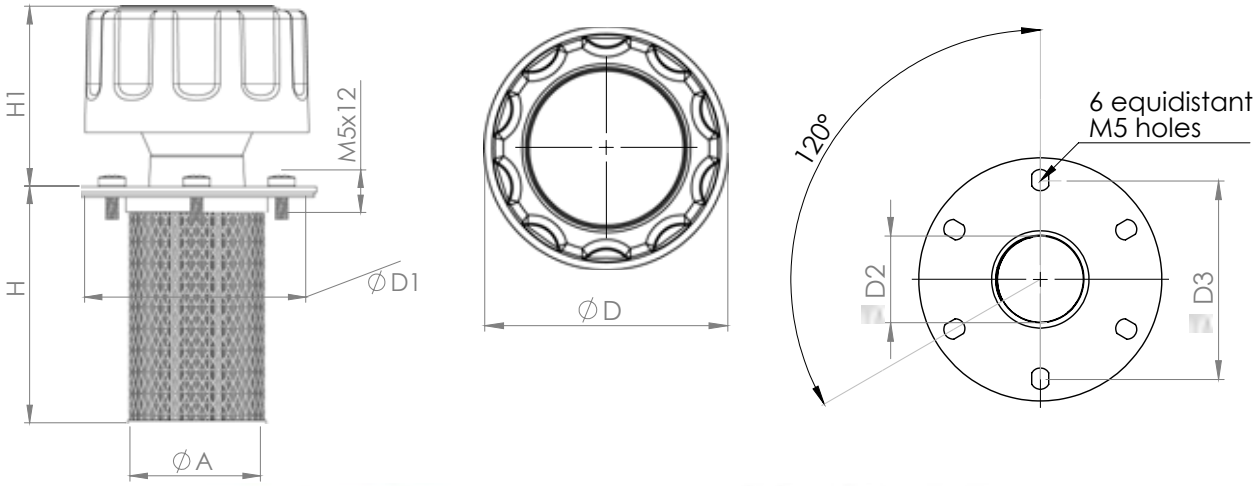




| Product Code | Product Description | H1 | H | ØA | ØD | ØD1 | ØD2 | ØD3 |
|---|---|---|---|---|---|---|---|---|
| GFBH-D18-N-400-G01 | Filling breathers Large Size With Screwed (Nickel Plated) | 65 | 86 | 46 | 80 | 86 | G 1" | 67,5-74,4 |
| GFBH-D18-P-400-G01 | Filling breathers Large Size With Screwed (Black Colored) | 65 | 86 | 46 | 80 | 86 | G 1" | 67,5-74,4 |
| GFBH-D18-N-149-G01 | Filling breathers Large Size With Screwed (Nickel Plated) | 65 | 86 | 46 | 80 | 86 | G 1" | 67,5-74,4 |
| GFBH-D18-P-149-G01 | Filling breathers Large Size With Screwed (Black Colored) | 65 | 86 | 46 | 80 | 86 | G1" | 67,5-74,4 |
| GFBH-D12-N-400-G01 | Filling breathers Small Size With Screwed (Nickel Plated) | 42 | 68 | 27 | 54 | 51 | G 1/2" | 41 |

| ORDERING AND OPTION CHART | | | | | | |
|---|---|---|---|---|---|---|
| SERIES | | GFBH | | | D21 | D24 |
| CONNECTIONS | | D18<br>D12 | | | 1 1/4'' | 1 1/2'' |
| | | 1"<br>1/2" | | | | |
| COVERING | | N<br>P | | | | |
| | | Nickel Plated<br>Painted | | | | |
| FILTRATION RATING | | 400<br>149 | | | | |
| | | Nylon6 Mesh / 400 µ<br>Metal Mesh / 149 µ | | | | |

| Gemma Standart | G01 |
|---|---|
| Customized | GXX |

# AIR BREATHER PLUG with VALVE

## GEMMA AIR BREATHER PLUG with VALVE

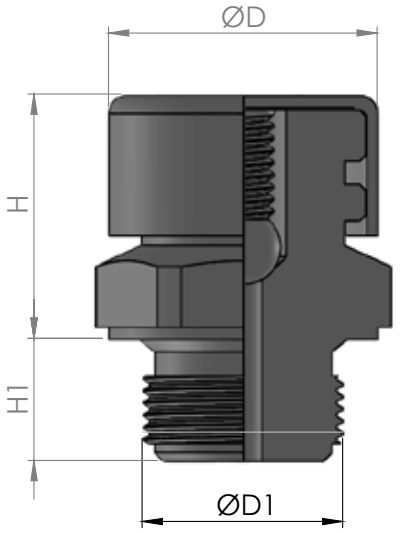


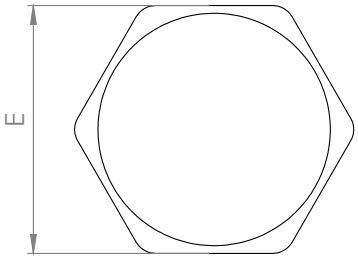




| Product Code | Product Description | ØD1 | ØD | H | H1 | E |
|---|---|---|---|---|---|---|
| GBPV-D09-K-G01 | 3/8" Air Breather | G 3/8" | 22 | 20 | 10 | 22 |
| GBPV-D12-K-G01 | 1/2" Air Breather | G 1/2" | 26 | 21 | 12 | 27 |
| GBPV-M20-K-G01 | M20 Air Breather | M20x1,5 | 26 | 21 | 12 | 27 |

| ORDERING AND OPTION CHART | | | | | | |
|---|---|---|---|---|---|---|
| SERIES | | GBPV | | | | D24 |
| SIZE & LENGTH | | D09 | | D12 | | 1 1/2'' |
| | | 3/8" | | 1/2" | | |
| FLAT SEAL | | K | | B | | |
| | | Klingrite | | Bonded Seal | (Op-tion) | |
| FILTRATION RATING | | 400<br>149 | | | | |
| | | Nylon6 Mesh / 400 µ<br>Metal Mesh / 149 µ | | | | |

** Please get in contact with us for details.*

HYDRAULIC

GEMMA

PRODUCT CATALOGUE ÜRÜN KATALOĞU

BİZE ULAŞ

## CONTACT US


+90 (332) 236 01 80

+90 (332) 236 01 83

www.gemmahydraulic.com

Büyükkayacık OSB. Mah. 4.Organize Sanayi 413. Sk. No:9

**Selçuklu / KONYA**


GEMMA HYDRAULIC