20 SERIE GEAR PUMP ISO BI-ROTATIONAL

20 SERİ DİŞLİ POMPA ISO ÇİFT YÖNLÜ

Inlet Pressure	0.3÷ 2 bar
Operating Viscosity	-12:100 cSt
Fluid Temperature	-40 ºC+145 ºC

Working Pressure	Contamination NAS 1638	Contamination ISO 4406	Filtre βx=75
≥200 bar	11	20/17	25 µm
≤200 bar	12	21/18	40 µm

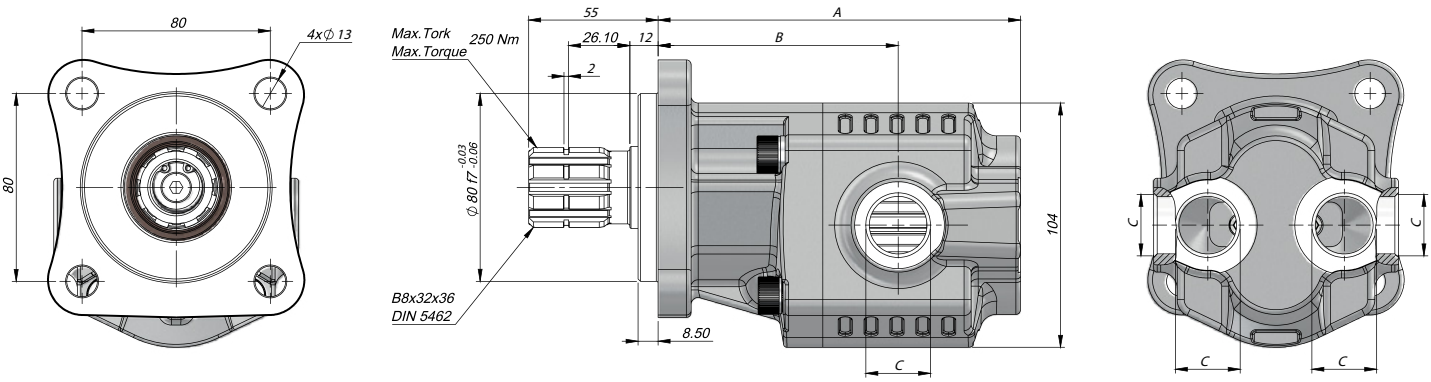

Code	Displacement	Max.Continuous Pressure	Min. Speed	Max.Continuous Speed	A	B	Inlet	Outlet
20-ISO	(cm³/rev)	(100%) (BAR)	(RPM)	(RPM)	(mm)	(mm)	C	C
32000651	6	280	300	2300	124	90	G 1/2"	G 1/2"
32001051	10				130	96		
32001651	16				140	96		
32002051	20	260			146	100		
32002551	25	220			154	102	G 3/4"	G 3/4"
32003251	32	190		2100	165	113		
32004051	40	180		1900	178	126		

20 SERIE GEAR PUMP UNI BI-ROTATIONAL

20 SERİ DİŞLİ POMPA UNI ÇİFT YÖNLÜ

Inlet Pressure	0.3÷ 2 bar
Operating Viscosity	-12:100 cSt
Fluid Temperature	-40 ºC+145 ºC

Working Pressure	Contamination NAS 1638	Contamination ISO 4406	Filtre βx=75
≥200 bar	11	20/17	25 µm
≤200 bar	12	21/18	40 µm

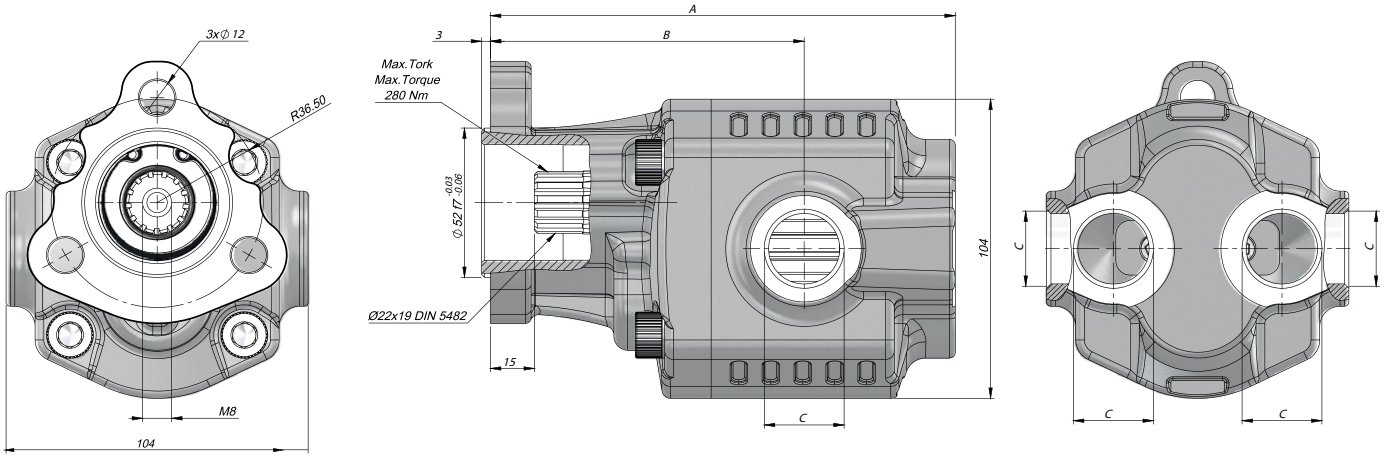

Code	Displacement	Max.Continuous Pressure	Min. Speed	Max.Continuous Speed	A	B	Inlet	Outlet
20-UNI	(cm³/rev)	(100%) (BAR)	(RPM)	(RPM)	(mm)	(mm)	C	C
32000641	6	280	300	2300	130	96	G 1/2"	G 1/2"
32001041	10				136	102		
32001641	16				146	102		
32002041	20	260			152	106		
32002541	25	220			160	108	G 3/4"	G 3/4"
32003241	32	190		2100	171	119		
32004041	40	180		1900	184	132		

20 SERIE GEAR PUMP K KEYED BI-ROTATIONAL

20 SERİ DİŞLİ POMPA K KAMALI ÇİFT YÖNLÜ

Inlet Pressure	0.3÷ 2 bar
Operating Viscosity	-12:100 cSt
Fluid Temperature	-40 ºC+145 ºC

Working Pressure	Contamination NAS 1638	Contamination ISO 4406	Filtre βx=75
≥200 bar	11	20/17	25 µm
≤200 bar	12	21/18	40 µm

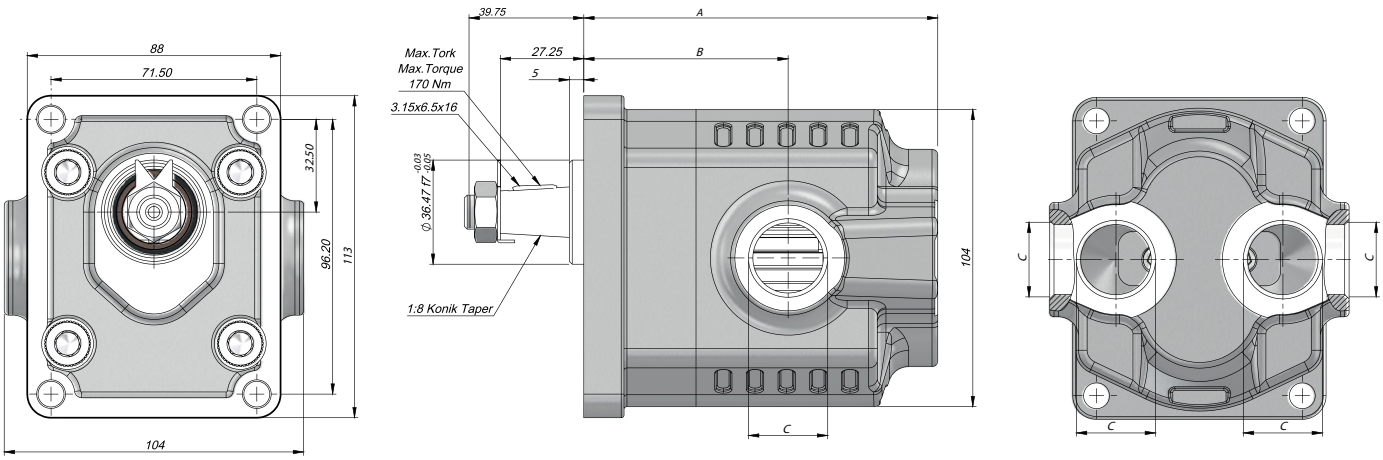

Code	Displacement	Max.Continuous Pressure	Min. Speed	Max.Continuous Speed	A	B	Inlet	Outlet
20-UNI	(cm³/rev)	(100%) (BAR)	(RPM)	(RPM)	(mm)	(mm)	C	C
32000661	6	280	300	2300	93	96	G 1/2"	G 1/2"
32001061	10				99	65		
32001661	16				109	65		
32002061	20	260			115	69		
32002561	25	220			123	71	G 3/4"	G 3/4"
32003261	32	190		2100	134	82		
32004061	40	180		1900	147	95		

17 cc ISO 4 Bolt Bi-Rotational Gear Pump 4 Port

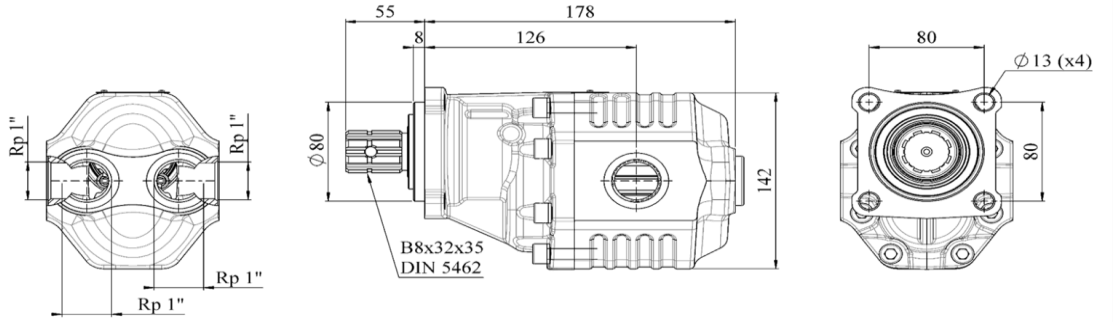

Specifications

Product Code	Displacement	Rotation	Working Pressure	Max.intermittent pressure	Max.peak pressure	Max.continuous speed	Max.speed at intermit. pressure	Oil temperature	Operating Viscosity Range	Oil inlet diameter	Oil Outlet diameter	Weight
33001751	17 cc/rev.	bi-rotational	290 bar	315 bar	325 bar	2500 1/min.	3000 1/min.	-20 & 80 °C	12 & 100 cSt	G 1"	G 1"	11,2 kg

Torgue - Pressure charesteristics

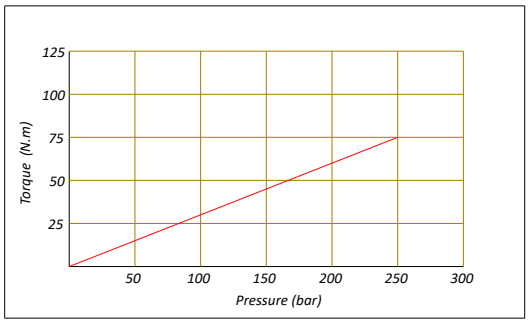

Pressure definition

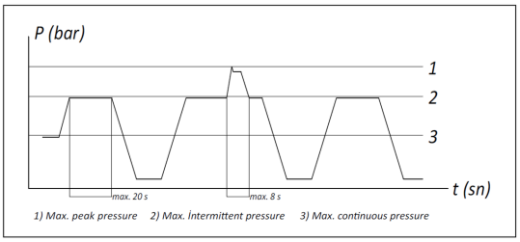

Hydraulic Pump Symbol

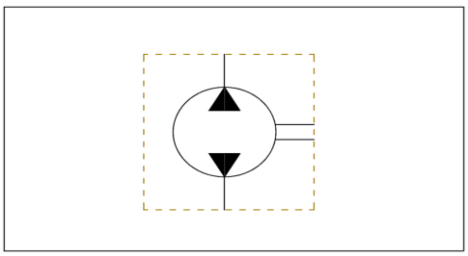

22 cc ISO 4 Bolt Bi-Rotational Gear Pump 4 Port

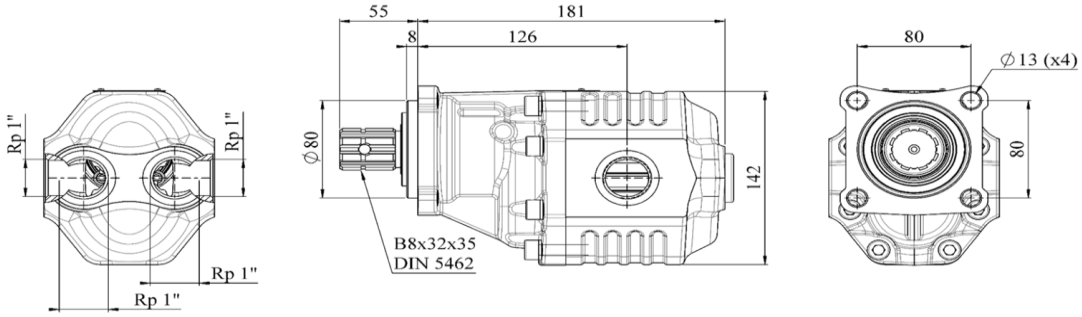

Specifications

Product Code	Displacement	Rotation	Working Pressure	Max.intermittent pressure	Max.peak pressure	Max.continuous speed	Max.speed at intermit. pressure	Oil temperature	Operating Viscosity Range	Oil inlet diameter	Oil Outlet diameter	Weight
33002251	22 cc/rev.	bi-rotational	290 bar	315 bar	325 bar	2500 1/min.	3000 1/min.	-20 & 80 °C	12 & 100 cSt	G 1"	G 1"	11,5 kg

Torgue - Pressure charesteristics

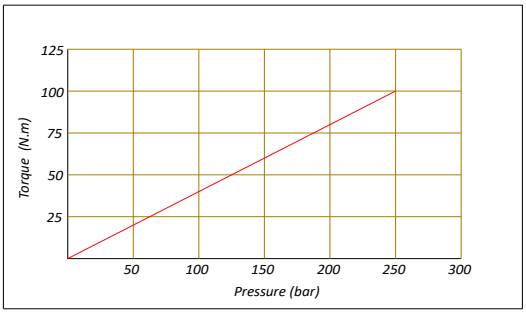

Pressure definition

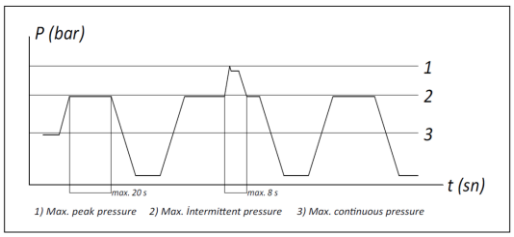

Hydraulic Pump Symbol

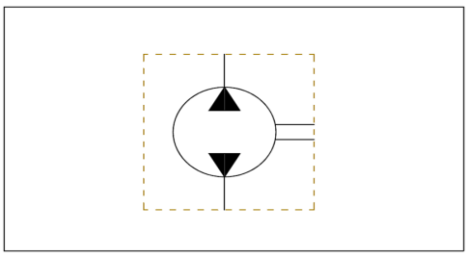

27 cc ISO 4 Bolt Bi-Rotational Gear Pump 4 Port

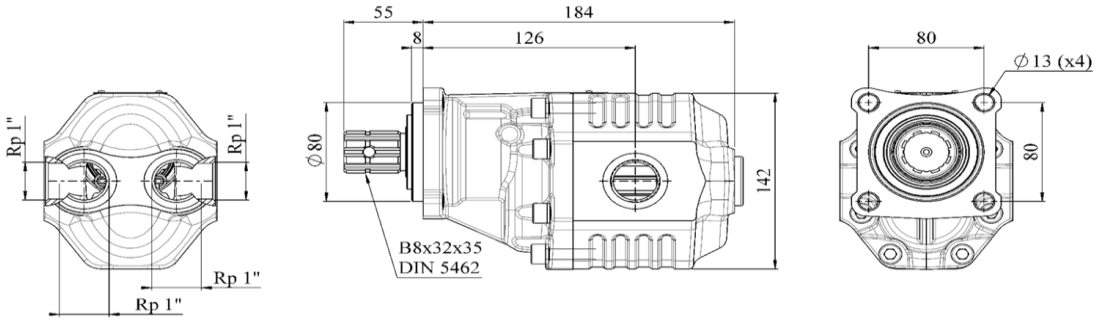

Specifications

Product Code	Displacement	Rotation	Working Pressure	Max.intermittent pressure	Max.peak pressure	Max.continuous speed	Max.speed at intermit. pressure	Oil temperature	Operating Viscosity Range	Oil inlet diameter	Oil Outlet diameter	Weight
33002751	27 cc/rev.	bi-rotational	290 bar	315 bar	325 bar	2500 1/min.	3000 1/min.	-20 & 80 °C	12 & 100 cSt	G 1"	G 1"	11,7 kg

Torgue - Pressure charesteristics

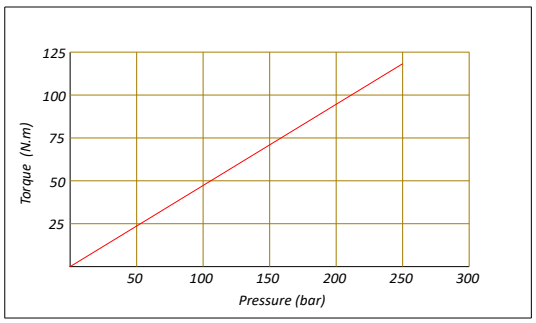

Pressure definition

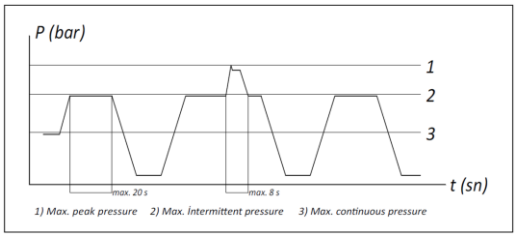

Hydraulic Pump Symbol

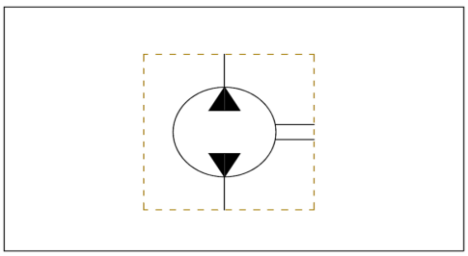

34 cc ISO 4 Bolt Bi-Rotational Gear Pump 4 Port

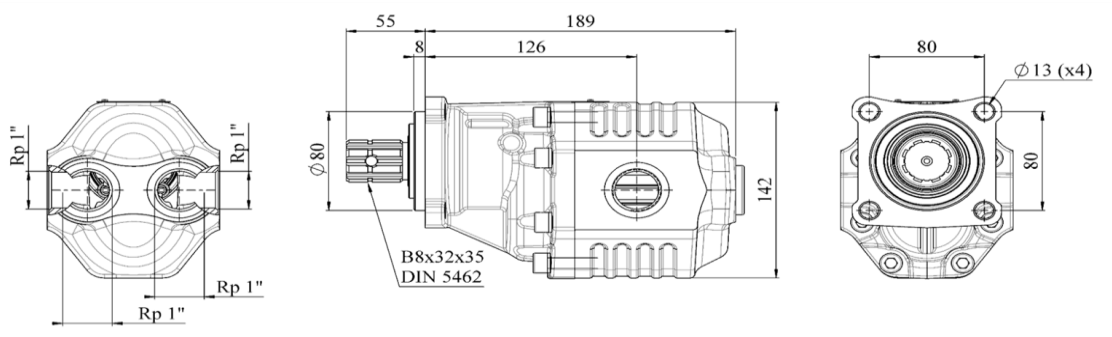

Specifications

Product Code	Displacement	Rotation	Working Pressure	Max.intermittent pressure	Max.peak pressure	Max.continuous speed	Max.speed at intermit. pressure	Oil temperature	Operating Viscosity Range	Oil inlet diameter	Oil Outlet diameter	Weight
33003451	34 cc/rev.	bi-rotational	280 bar	300 bar	310 bar	2200 1/min.	2800 1/min.	-20 & 80 °C	12 & 100 cSt	G 1"	G 1"	12,1 kg

Torgue - Pressure charesteristics

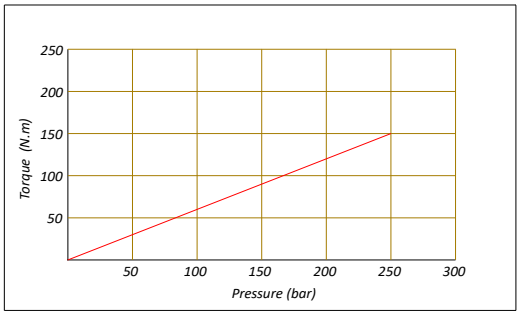

Pressure definition

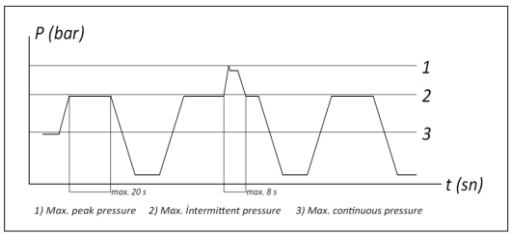

Hydraulic Pump Symbol

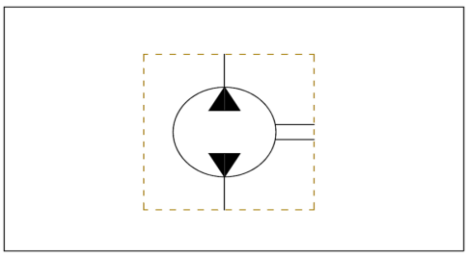

43 cc ISO 4 Bolt Bi-Rotational Gear Pump 4 Port

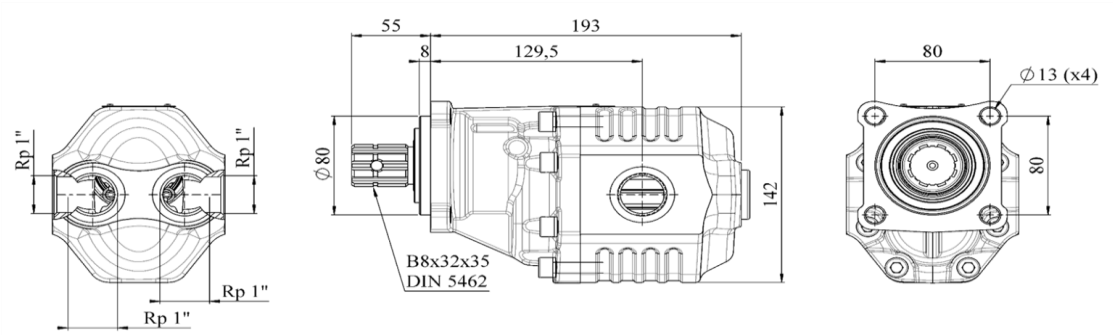

Specifications

Product Code	Displacement	Rotation	Working Pressure	Max.intermittent pressure	Max.peak pressure	Max.continuous speed	Max.speed at intermit. pressure	Oil temperature	Operating Viscosity Range	Oil inlet diameter	Oil Outlet diameter	Weight
33004351	43 cc/rev.	bi-rotational	270 bar	290 bar	300 bar	2000 1/min.	2500 1/min.	-20 & 80 °C	12 & 100 cSt	G 1"	G 1"	12,5 kg

Torgue - Pressure charesteristics

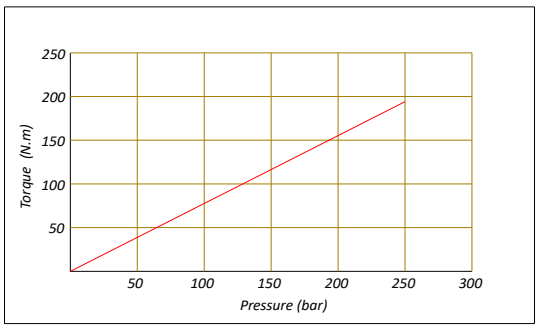

Pressure definition

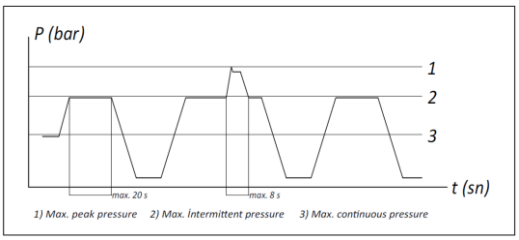

Hydraulic Pump Symbol

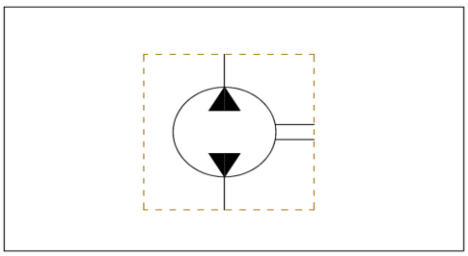

51 cc ISO 4 Bolt Bi-Rotational Gear Pump 4 Port

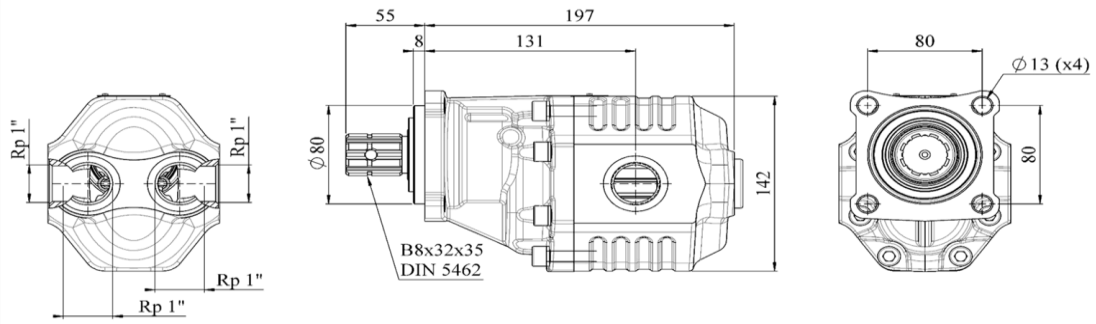

Specifications

Product Code	Displacement	Rotation	Working Pressure	Max.intermittent pressure	Max.peak pressure	Max.continuous speed	Max.speed at intermit. pressure	Oil temperature	Operating Viscosity Range	Oil inlet diameter	Oil Outlet diameter	Weight
33005151	51 cc/rev.	bi-rotational	240 bar	260 bar	280 bar	2000 1/min.	2500 1/min.	-20 & 80 °C	12 & 100 cSt	G 1"	G 1"	12,8 kg

Torgue - Pressure charesteristics

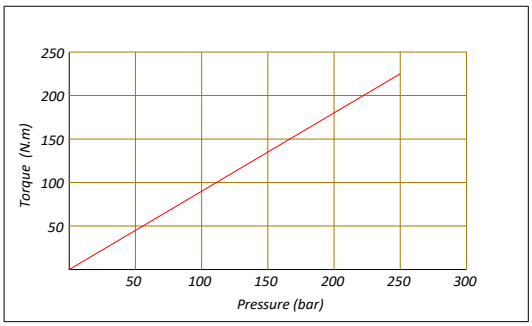

Pressure definition

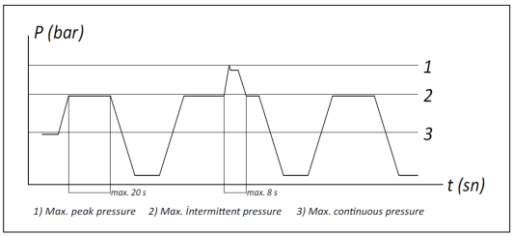

Hydraulic Pump Symbol

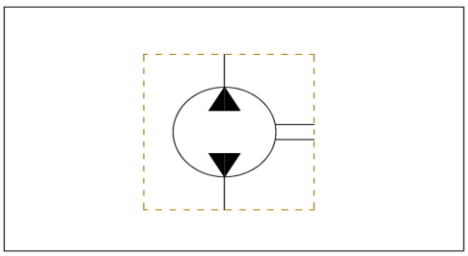

61 cc ISO 4 Bolt Bi-Rotational Gear Pump 4 Port

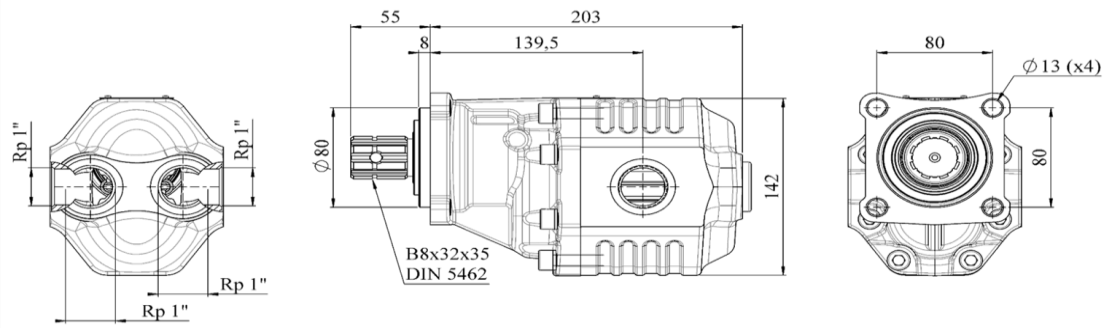

Specifications

Product Code	Displacement	Rotation	Working Pressure	Max.intermittent pressure	Max.peak pressure	Max.continuous speed	Max.speed at intermit. pressure	Oil temperature	Operating Viscosity Range	Oil inlet diameter	Oil Outlet diameter	Weight
33006151	61 cc/rev.	bi-rotational	220 bar	240 bar	250 bar	1900 1/min.	2500 1/min.	-20 & 80 °C	12 & 100 cSt	G 1"	G 1"	13,3 kg

Torgue - Pressure charesteristics

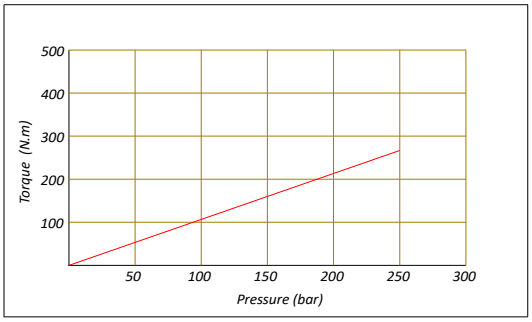

Pressure definition

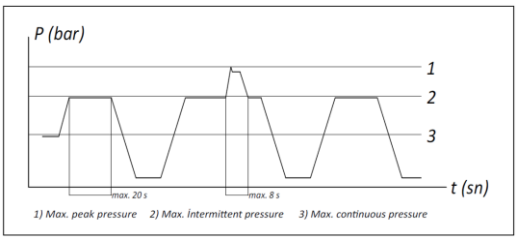

Hydraulic Pump Symbol

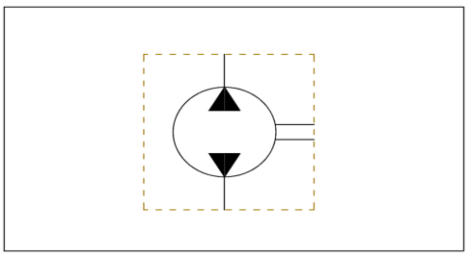

82 cc ISO 4 Bolt Bi-Rotational Gear Pump 4 Port

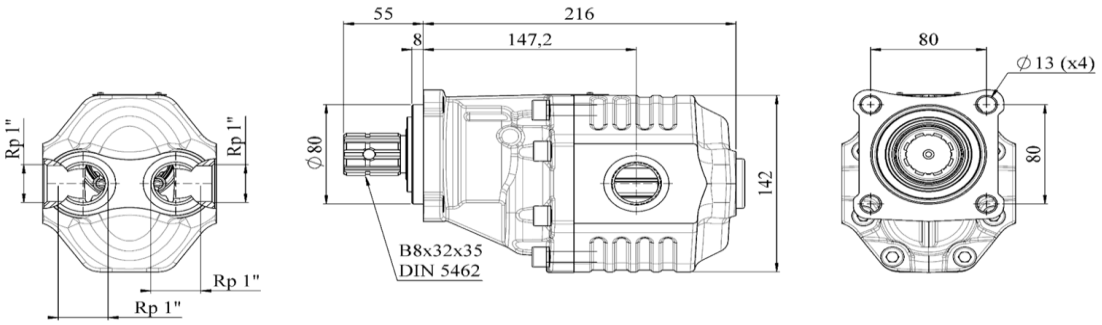

Specifications

Product Code	Displacement	Rotation	Working Pressure	Max.intermittent pressure	Max.peak pressure	Max.continuous speed	Max.speed at intermit. pressure	Oil temperature	Operating Viscosity Range	Oil inlet diameter	Oil Outlet diameter	Weight
33008251	82 cc/rev.	bi-rotational	205 bar	225 bar	230 bar	1900 1/min.	2500 1/min.	-20 & 80 °C	12 & 100 cSt	G 1"	G 1"	14,4 kg

Torgue - Pressure charesteristics

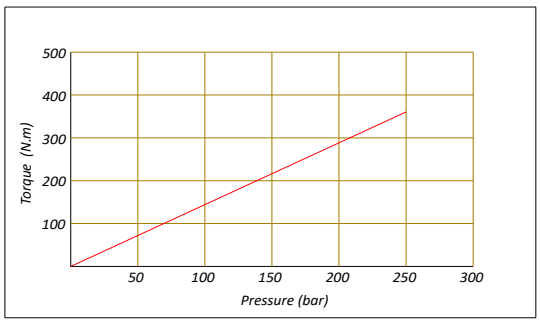

Pressure definition

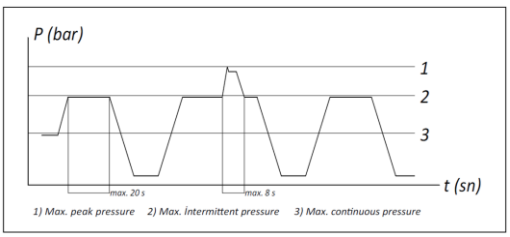

Hydraulic Pump Symbol

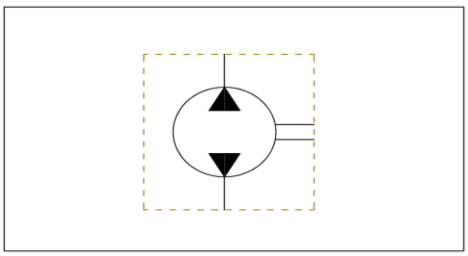

92 cc ISO 4 Bolt Bi-Rotational Gear Pump 4 Port

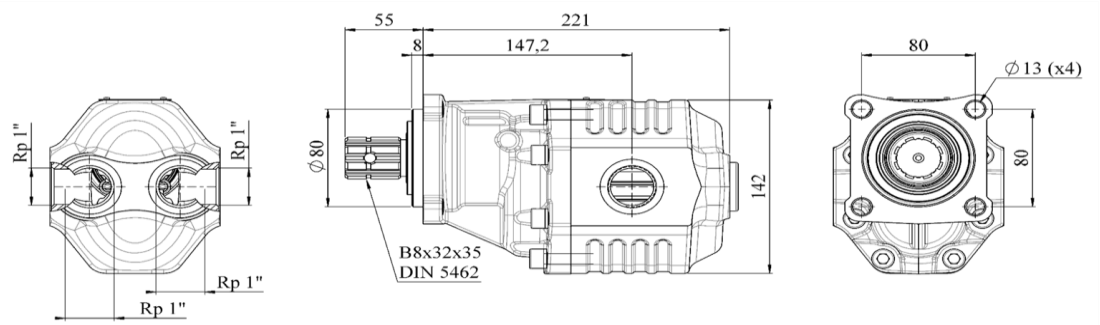

Specifications

Product Code	Displacement	Rotation	Working Pressure	Max.intermittent pressure	Max.peak pressure	Max.continuous speed	Max.speed at intermit. pressure	Oil temperature	Operating Viscosity Range	Oil inlet diameter	Oil Outlet diameter	Weight
33009251	92 cc/rev.	bi-rotational	180 bar	200 bar	220 bar	1900 1/min.	2500 1/min.	-20 & 80 °C	12 & 100 cSt	G 1"	G 1"	14,9 kg

Torgue - Pressure charesteristics

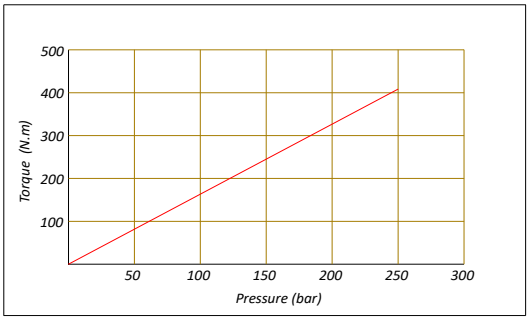

Pressure definition

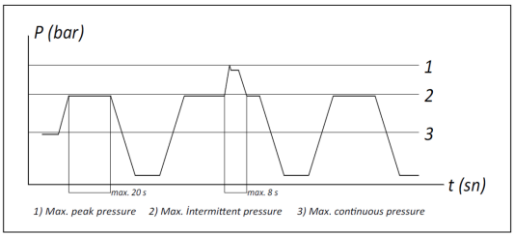

Hydraulic Pump Symbol

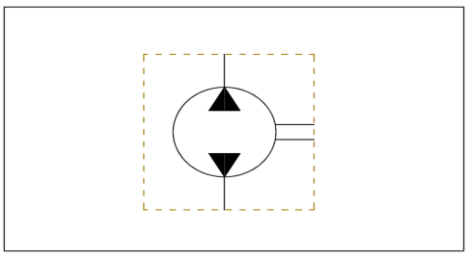

100 cc ISO 4 Bolt Bi-Rotational Gear Pump 4 Port

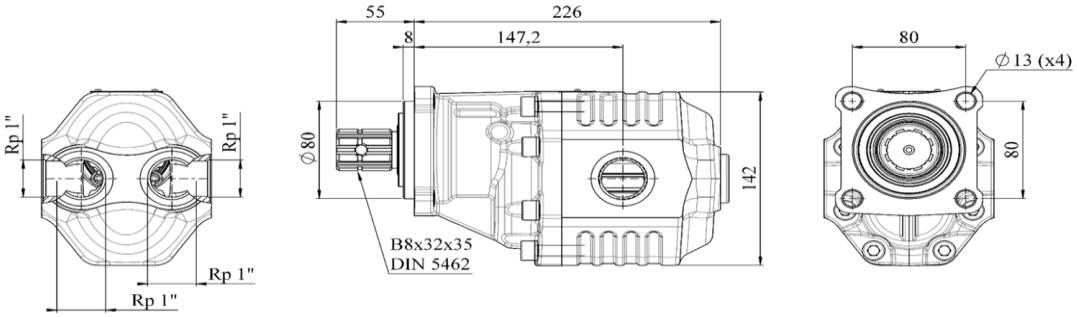

Specifications

Product Code	Displacement	Rotation	Working Pressure	Max.intermittent pressure	Max.peak pressure	Max.continuous speed	Max.speed at intermit. pressure	Oil temperature	Operating Viscosity Range	Oil inlet diameter	Oil Outlet diameter	Weight
33010051	100 cc/rev.	bi-rotational	180 bar	200 bar	220 bar	1500 1/min.	1800 1/min.	-20 & 80 °C	12 & 100 cSt	G 1"	G 1"	15,3 kg

Torgue - Pressure charesteristics

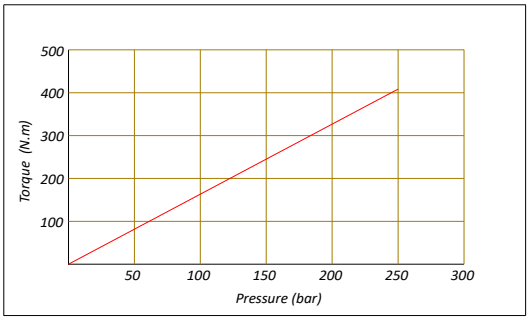

Pressure definition

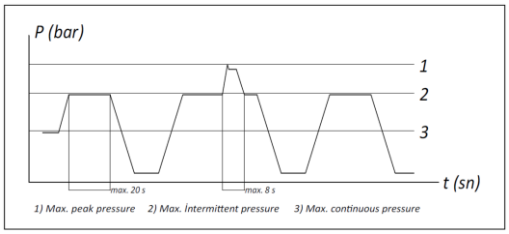

Hydraulic Pump Symbol

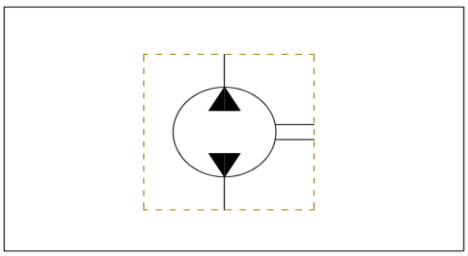

30 SINGLE ROTATION ISO

30 TEK DÖNÜŞLÜ ISO

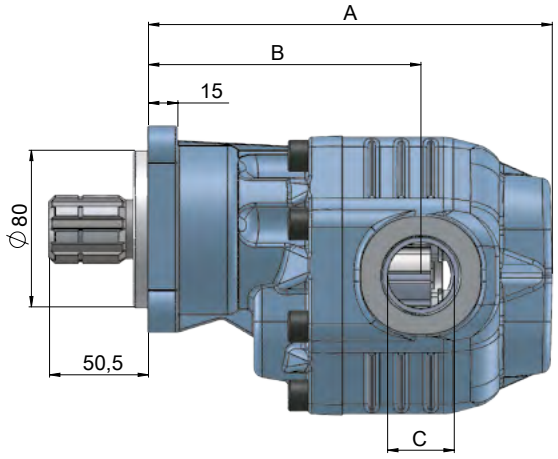

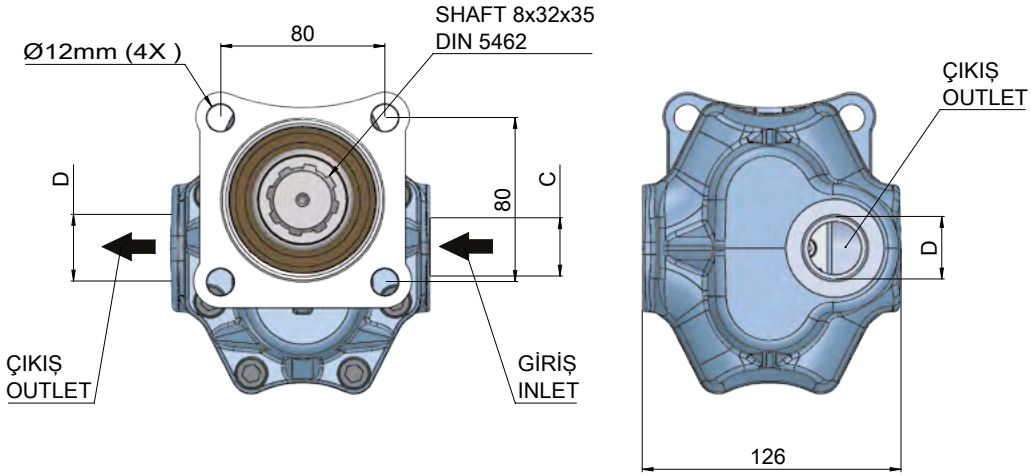

POMPA KODU PUMP CODES	ROTATION YÖN	DISPLACEMENT DEBİ (Lt/min)	A (mm)	B (mm)	INLET GİRİŞ (C)	OUTLET ÇIKIŞ (D)	Max. Continuous Pressure Max. Sürekli Basınç(Pnom)	Max. Peak Pressure Max. Pik Basınç (Pmax)
33001731	RIGHT/SAĞ	17	201	126	R1/2"-14	R1/2"-14	265	300
33001732	LEFT/SOL							
33002731	RIGHT/SAĞ	27	208	130	R3/4"-14	R3/4"-14	260	290
33002732	LEFT/SOL							
33003431	RIGHT/SAĞ	34	183	132			250	280
33003432	LEFT/SOL							
33004331	RIGHT/SAĞ	43	190	135	R1"-11		240	270
33004332	LEFT/SOL							
33005131	RIGHT/SAĞ	51	193	137		R1"-11	220	250
33005132	LEFT/SOL							
33006131	RIGHT/SAĞ	61	201	138	R1 1/4"-11		210	240
33006132	LEFT/SOL							
33008231	RIGHT/SAĞ	82	315	147			180	220
33008232	LEFT/SOL							

30 PF SERIES BI-ROTATIONAL ISO

30 PF SERİSİ ÇİFT DÖNÜŞLÜ ISO

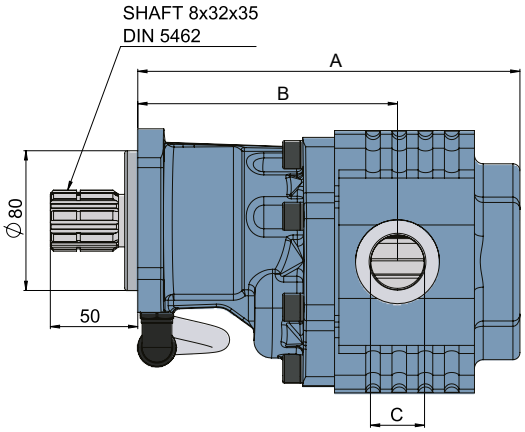

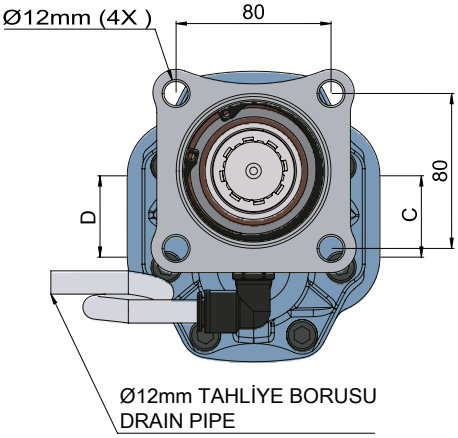

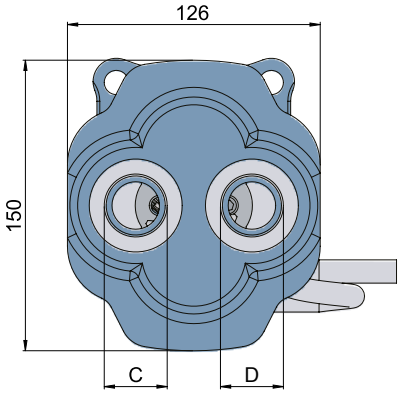

CODE KOD	ROTATION YÖN	DISPLACEMENT DEBİ (Lt/min)	A (mm)	B (mm)	INLET GİRİŞ (C)	OUTLET ÇIKIŞ (D)	Max. Continuous Pressure Max. Sürekli Basınç(Pnom)	Max. Peak Pressure Max. Pik Basınç (Pmax)
PF33003451	BI-ROTATIONAL-ÇİFT	34	199	146	R3/4"-14	R3/4"-14	250	280
PF33004351	BI-ROTATIONAL-ÇİFT	43	207	149			240	270
PF33005151	BI-ROTATIONAL-ÇİFT	51	210	151	R1"-14	R1"-14	220	250
PF33006151	BI-ROTATIONAL-ÇİFT	61	216	152			210	240
PF33008251	BI-ROTATIONAL-ÇİFT	82	226	161			180	220

GEMMA HIDROLIK LIMITED SIRKETI
Address : Büyükkayacık OSB. Mh. 413 Nolu Sk. No:9 Selçuklu / KONYA / TURKIYE
Wire : +90 332 236 01 80
Fax : +90 332 236 01 83
Web : www.gemmaautomotive.com
e-mail : info@gemmaautomotive.com

ISO PF SERIES POINTS TO BE CONSIDERED DURING INSTALLATION

1- The elements that must be used in the pump are defined below.

12x8 mm 50 cm
Transparent Drain Hose

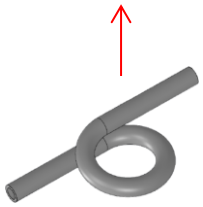

1/4 Elbow Ø12
Air Fitting

Picture -1

2- Transparent hose and pneumatic fitting are assembled as shown in picture -2. If the pump is not used with the specified elements, our company will not be responsible for the failure of the pump and the vehicle.

Picture -2

3- When assembling, the transparent hose should not be in contact with places such as (PTO, Pump, Main Transmission, Exhaust, etc.) in order not to be affected by temperature.

4- As seen in Figure-3, there are two oil seals in ISO Pumps. One of them is responsible for holding the oil coming from the main gearbox and the other one from the pump. In PF Series pumps, the distance between the two seals is more than other pumps and it notifies possible leaks more quickly. Another benefit is that it ensures that the two oils do not mix.

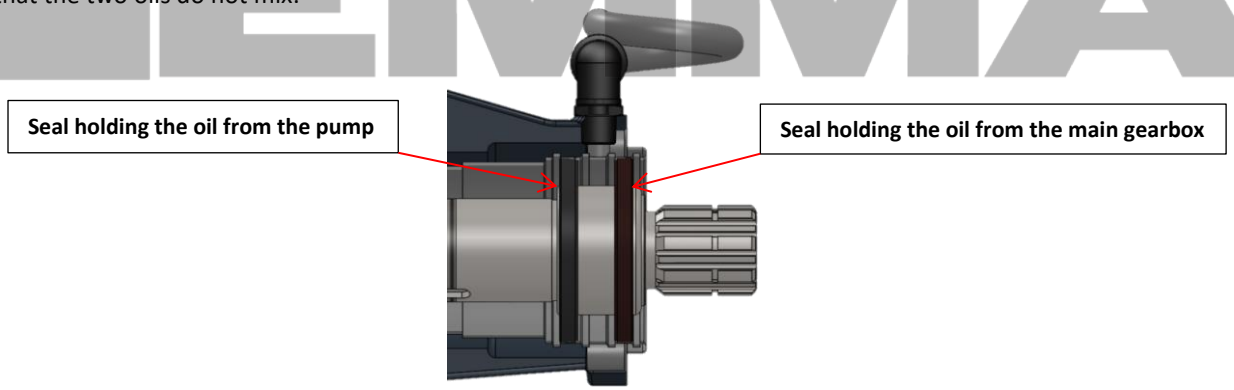

Picture -3

5- Every working day, the pump should be checked with the help of a hose. If there is oil in the hose, contact the nearest service center. If there is dirt or soil blocking the hose, it is cleaned and checked.

6- Oil coming from the drain hose is a harbinger of a malfunction. If the hose is folded, oil leakage cannot be observed and may cause a bigger malfunction. Correct and incorrect installation of the air discharge hose is shown in picture-4.

Picture -4

ADVANTAGES OF PF SERIES IN HYDRAULIC PUMPS

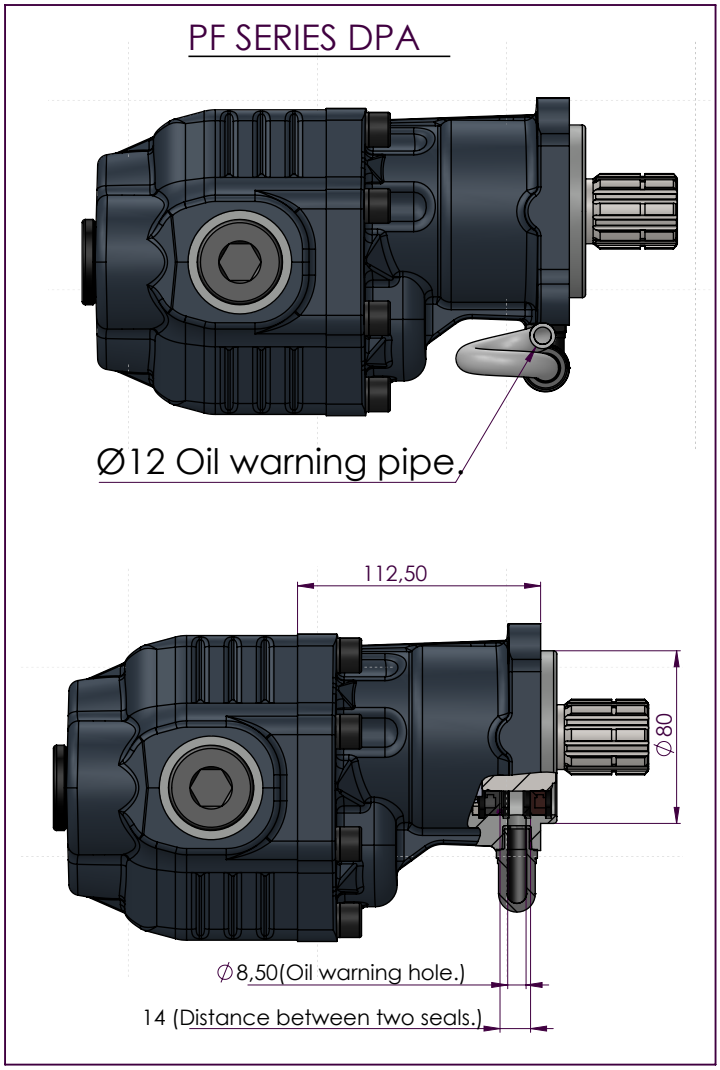

Figure 1.

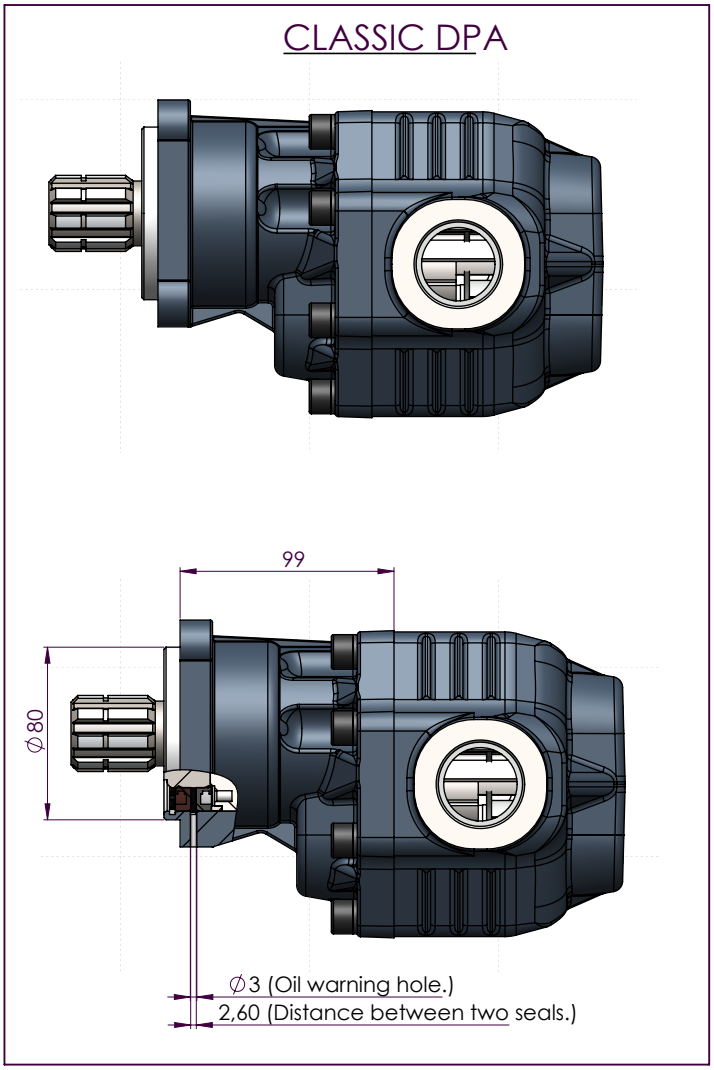

Figure 2.

1) PF series pumps, the distance between the two seals is wider than the classical DPA pumps, allowing the seal leakage that occurs over time to be recognised more quickly thanks to the transparent hose.
You can see the difference between the distance between the seals and the oil warning holes in Figure 1 and Figure 2.

2) Since the oil warning hole (Figure 2.) is Ø3mm in classical DPA pumps, oil leaks become invisible as dust, mud etc. factors will cover the hole more easily. Such a situation has been prevented by designing PF series.

3) PF series covers are in ISO standard dimensions like classic DPA covers and there is no problem in installation.

30 PF SERIES SINGLE ROTATIONAL ISO

30 PF SERİSİ TEK DÖNÜŞLÜ İSO

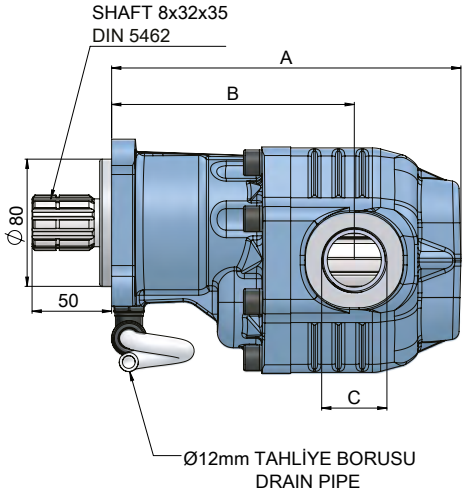

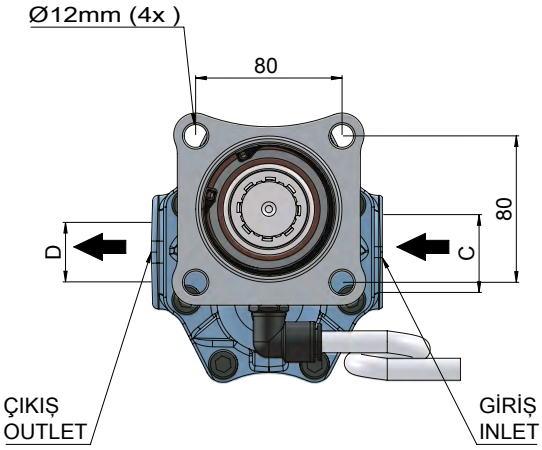

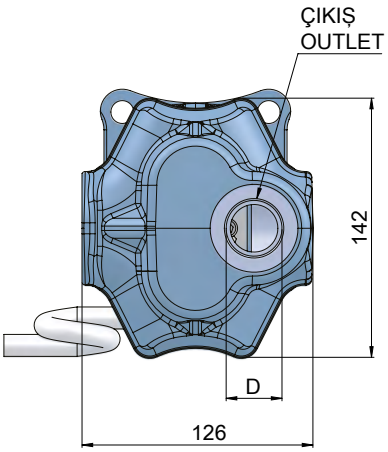

CODE KOD	ROTATION YÖN	DISPLACEMENT DEBİ (Lt/min)	A (mm)	B (mm)	INLET GİRİŞ (C)	OUTLET ÇIKIŞ (D)	Max. Continuous Pressure Max. Sürekli Basınç(Pnom)	Max. Peak Pressure Max. Pik Basınç (Pmax)
PF33001731	RIGHT/SAĞ	17	179	134	R1/2"-14	R1/2"-14	265	300
PF33001732	LEFT/SOL							
PF33002731	RIGHT/SAĞ	27	186	138	R3/4"-14	R3/4"-14	260	290
PF33002732	LEFT/SOL							
PF33003431	RIGHT/SAĞ	34	191	140			250	280
PF33003432	LEFT/SOL							
PF33004331	RIGHT/SAĞ	43	198	143	R1"-11		240	270
PF33004332	LEFT/SOL							
PF33005131	RIGHT/SAĞ	51	201	145		R1"-11	220	250
PF33005132	LEFT/SOL							
PF33006131	RIGHT/SAĞ	61	209	146	R1 1/4"-11		210	240
PF33006132	LEFT/SOL							
PF33008131	RIGHT/SAĞ	82	323	155			180	220
PF33008132	LEFT/SOL							

GEMMA HIDROLIK LIMITED SIRKETI
Address : Büyükkayacık OSB. Mh. 413 Nolu Sk. No:9 Selçuklu / KONYA / TURKIYE
Wire : +90 332 236 01 80
Fax : +90 332 236 01 83
Web : www.gemmaautomotive.com
e-mail : info@gemmaautomotive.com

ISO PF SERIES POINTS TO BE CONSIDERED DURING INSTALLATION

1- The elements that must be used in the pump are defined below.

12x8 mm 50 cm
Transparent Drain Hose

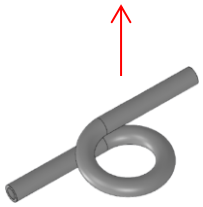

1/4 Elbow Ø12
Air Fitting

Picture -1

2- Transparent hose and pneumatic fitting are assembled as shown in picture -2. If the pump is not used with the specified elements, our company will not be responsible for the failure of the pump and the vehicle.

Picture -2

3- When assembling, the transparent hose should not be in contact with places such as (PTO, Pump, Main Transmission, Exhaust, etc.) in order not to be affected by temperature.

4- As seen in Figure-3, there are two oil seals in ISO Pumps. One of them is responsible for holding the oil coming from the main gearbox and the other one from the pump. In PF Series pumps, the distance between the two seals is more than other pumps and it notifies possible leaks more quickly. Another benefit is that it ensures that the two oils do not mix.

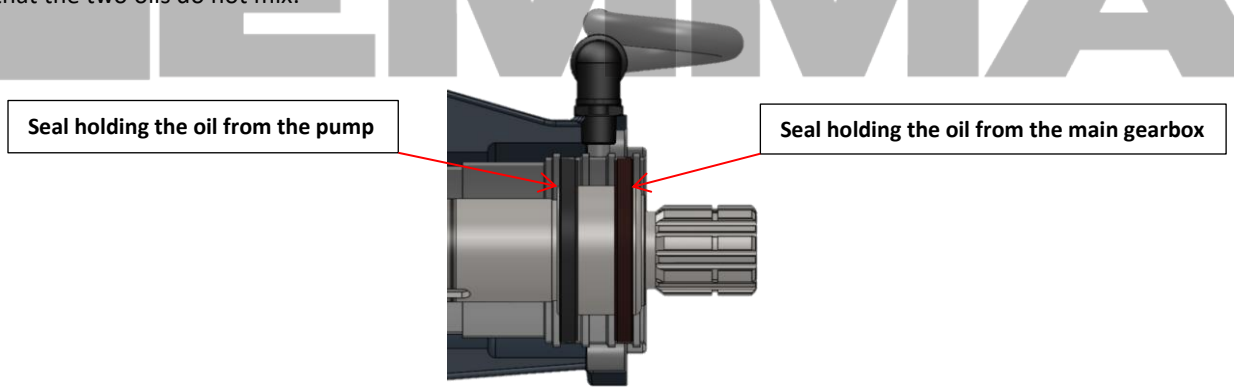

Picture -3

5- Every working day, the pump should be checked with the help of a hose. If there is oil in the hose, contact the nearest service center. If there is dirt or soil blocking the hose, it is cleaned and checked.

6- Oil coming from the drain hose is a harbinger of a malfunction. If the hose is folded, oil leakage cannot be observed and may cause a bigger malfunction. Correct and incorrect installation of the air discharge hose is shown in picture-4.

Picture -4

ADVANTAGES OF PF SERIES IN HYDRAULIC PUMPS

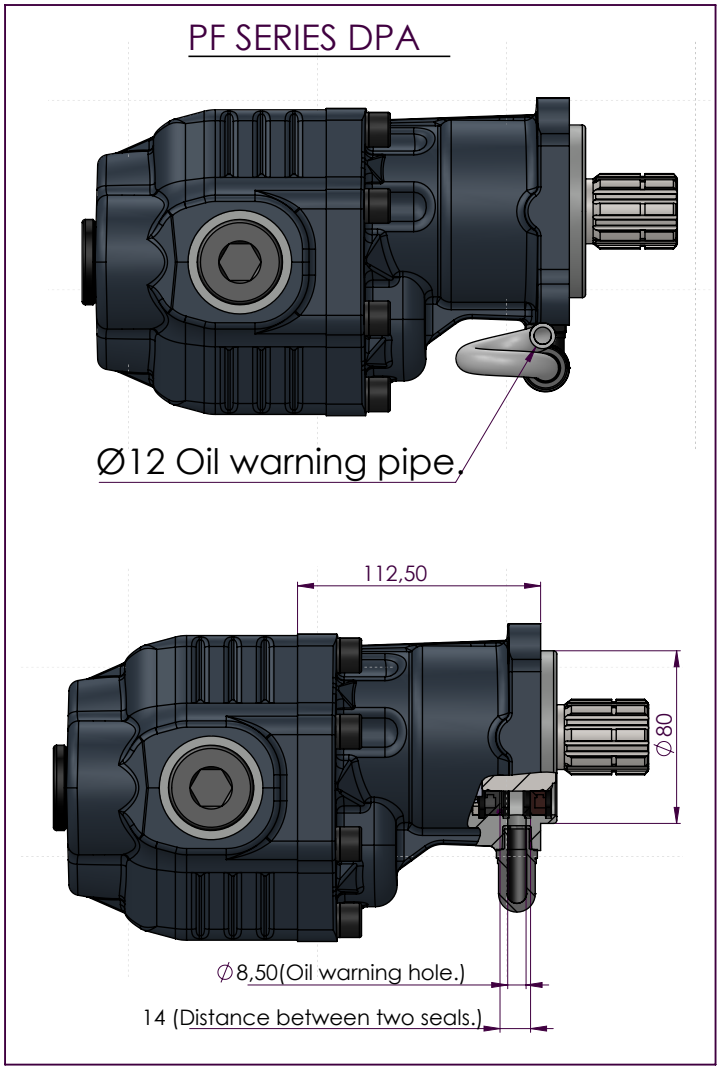

Figure 1.

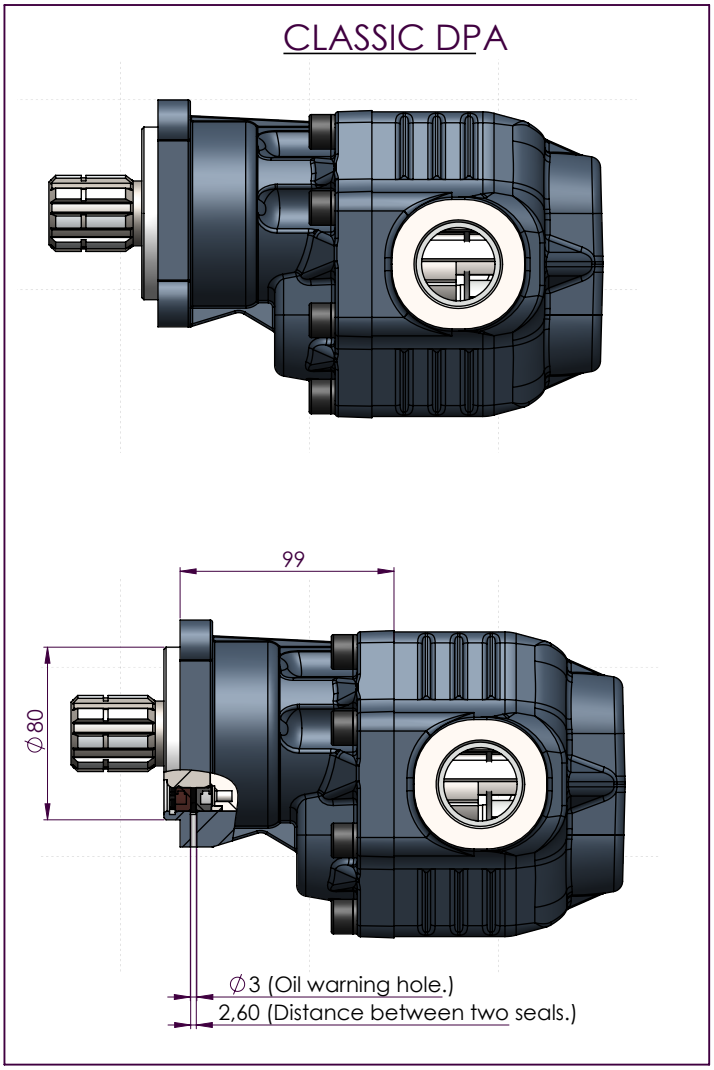

Figure 2.

1) PF series pumps, the distance between the two seals is wider than the classical DPA pumps, allowing the seal leakage that occurs over time to be recognised more quickly thanks to the transparent hose.
You can see the difference between the distance between the seals and the oil warning holes in Figure 1 and Figure 2.

2) Since the oil warning hole (Figure 2.) is Ø3mm in classical DPA pumps, oil leaks become invisible as dust, mud etc. factors will cover the hole more easily. Such a situation has been prevented by designing PF series.

3) PF series covers are in ISO standard dimensions like classic DPA covers and there is no problem in installation.

30-17 UNI 3 Bolt Bi-Rotational Gear Pump 4 Port

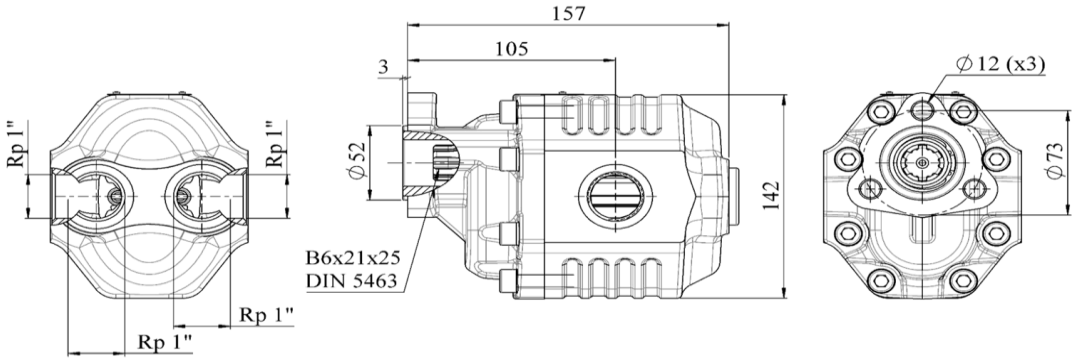

Specifications

Product Code	Displacement	Rotation	Working Pressure	Max.intermittent pressure	Max.peak pressure	Max.continuous speed	Max.speed at intermit. pressure	Oil temperature	Operating Viscosity Range	Oil inlet diameter	Oil Outlet diameter	Weight
33001741	17 cc/rev.	bi-rotational	290 bar	315 bar	325 bar	2500 1/min.	3000 1/min.	-20 & 80 °C	12 & 100 cSt	G 1"	G 1"	11,2 kg

Torgue - Pressure charesteristics

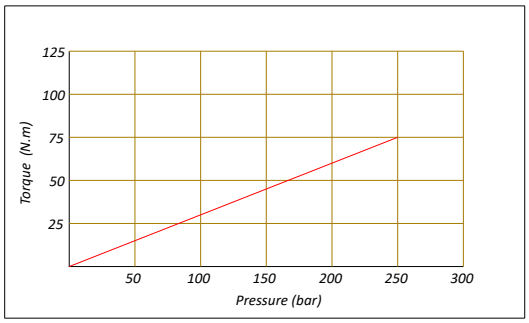

Pressure definition

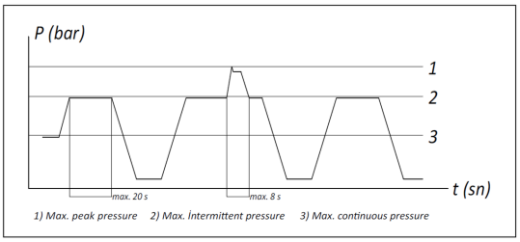

Hydraulic Pump Symbol

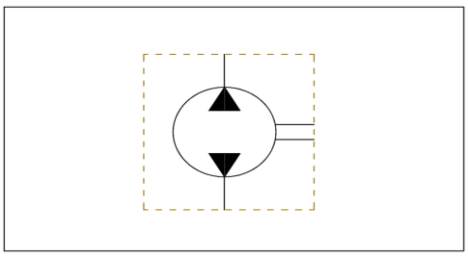

30-22 UNI 3 Bolt Bi-Rotational Gear Pump 4 Port

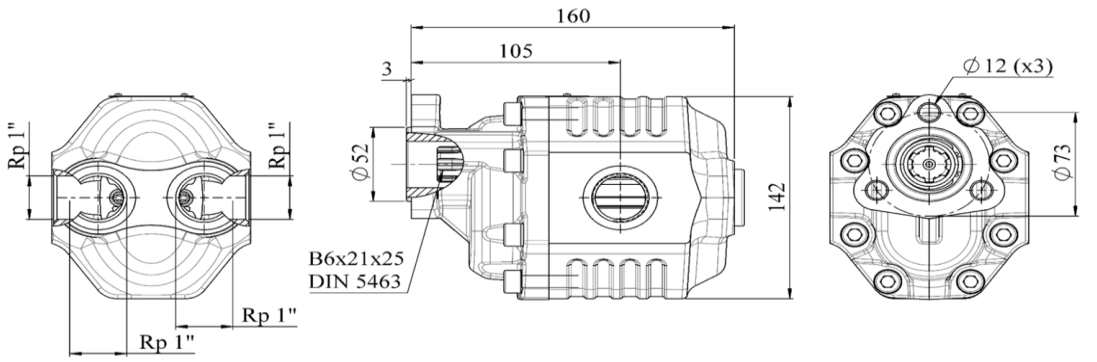

Specifications

Product Code	Displacement	Rotation	Working Pressure	Max.intermittent pressure	Max.peak pressure	Max.continuous speed	Max.speed at intermit. pressure	Oil temperature	Operating Viscosity Range	Oil inlet diameter	Oil Outlet diameter	Weight
33002241	22 cc/rev.	bi-rotational	290 bar	315 bar	325 bar	2500 1/min.	3000 1/min.	-20 & 80 °C	12 & 100 cSt	G 1"	G 1"	11,5 kg

Torgue - Pressure charesteristics

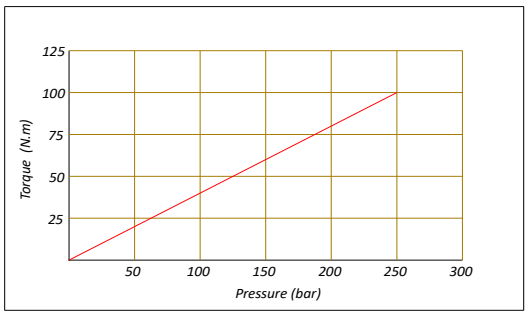

Pressure definition

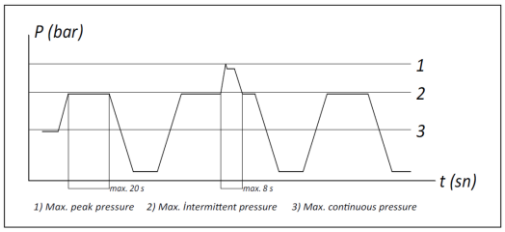

Hydraulic Pump Symbol

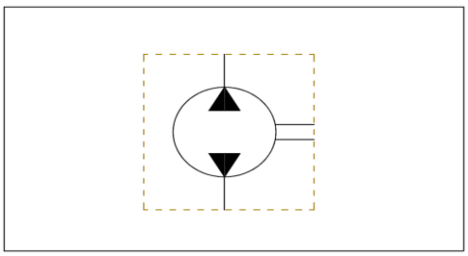

30-27 UNI 3 Bolt Bi-Rotational Gear Pump 4 Port

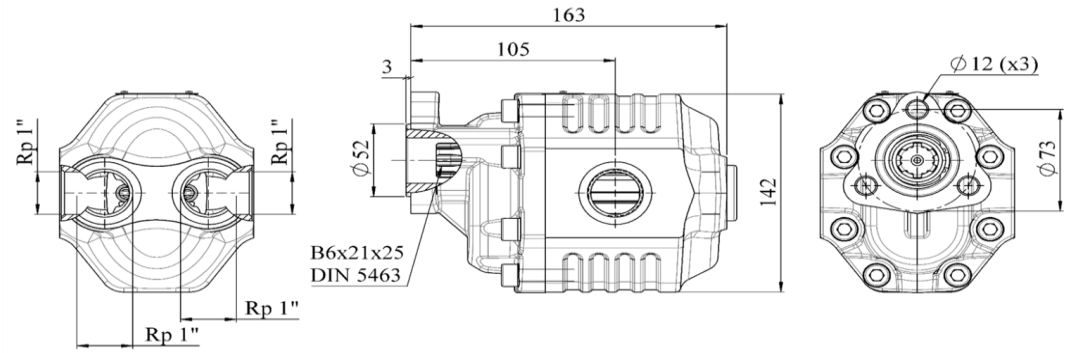

Specifications

Product Code	Displacement	Rotation	Working Pressure	Max.intermittent pressure	Max.peak pressure	Max.continuous speed	Max.speed at intermit. pressure	Oil temperature	Operating Viscosity Range	Oil inlet diameter	Oil Outlet diameter	Weight
33002741	27 cc/rev.	bi-rotational	290 bar	315 bar	325 bar	2500 1/min.	3000 1/min.	-20 & 80 °C	12 & 100 cSt	G 1"	G 1"	11,7 kg

Torgue - Pressure charesteristics

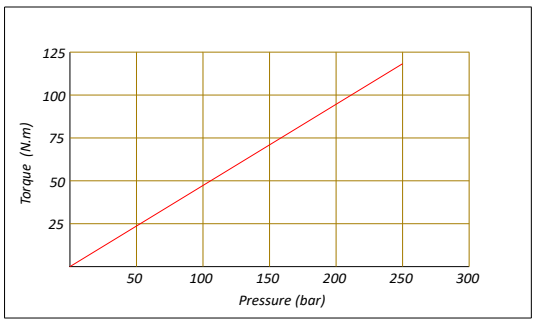

Pressure definition

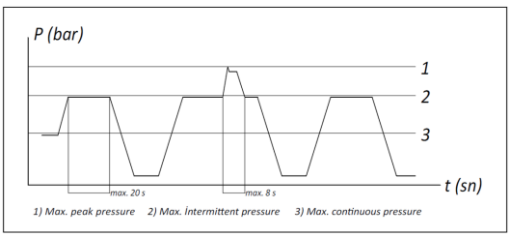

Hydraulic Pump Symbol

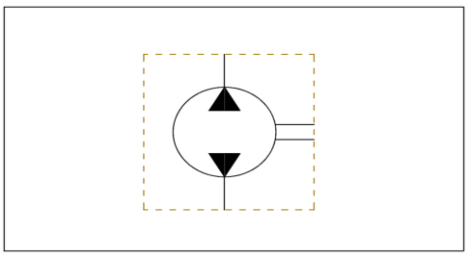

30-34 UNI 3 Bolt Bi-Rotational Gear Pump 4 Port

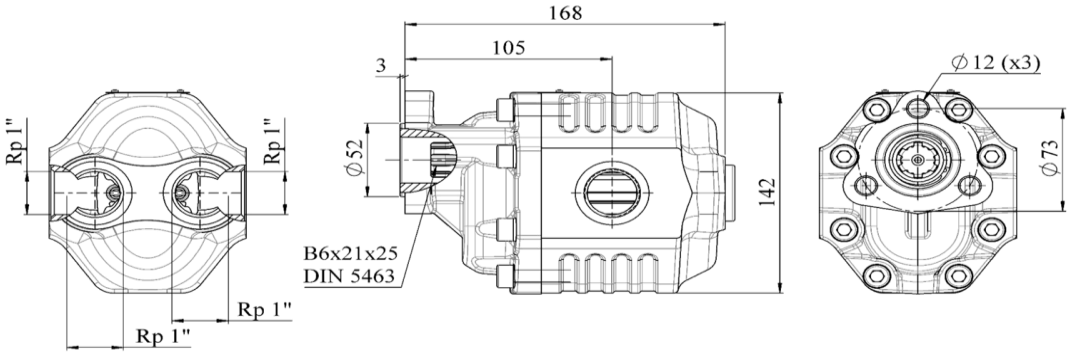

Specifications

Product Code	Displacement	Rotation	Working Pressure	Max.intermittent pressure	Max.peak pressure	Max.continuous speed	Max.speed at intermit. pressure	Oil temperature	Operating Viscosity Range	Oil inlet diameter	Oil Outlet diameter	Weight
33003441	34 cc/rev.	bi-rotational	280 bar	300 bar	310 bar	2200 1/min.	2800 1/min.	-20 & 80 °C	12 & 100 cSt	G 1"	G 1"	12,1 kg

Torgue - Pressure charesteristics

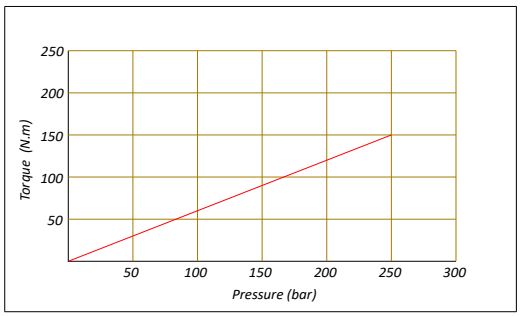

Pressure definition

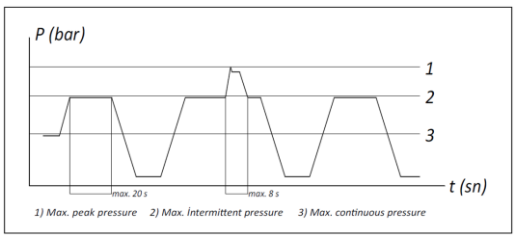

Hydraulic Pump Symbol

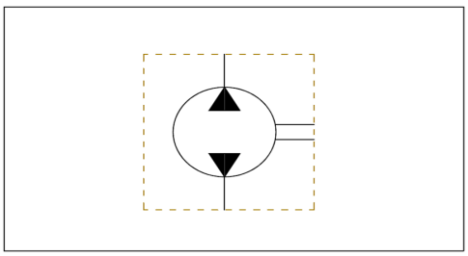

30-43 UNI 3 Bolt Bi-Rotational Gear Pump 4 Port

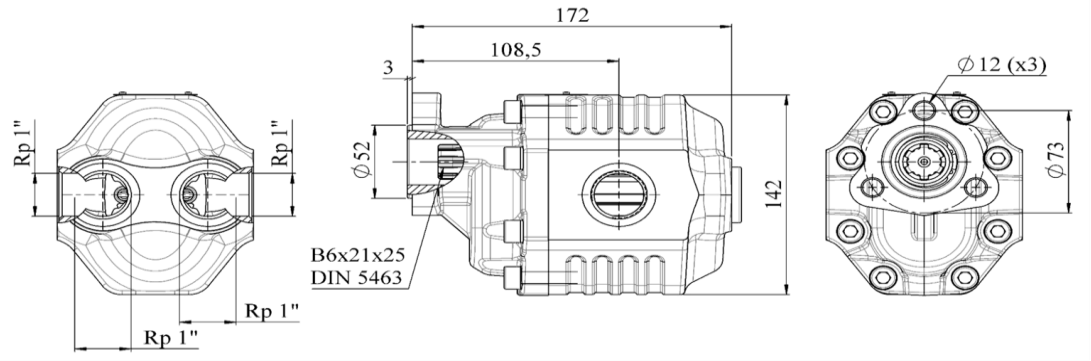

Specifications

Product Code	Displacement	Rotation	Working Pressure	Max.intermittent pressure	Max.peak pressure	Max.continuous speed	Max.speed at intermit. pressure	Oil temperature	Operating Viscosity Range	Oil inlet diameter	Oil Outlet diameter	Weight
33004341	43 cc/rev.	bi-rotational	270 bar	290 bar	300 bar	2000 1/min.	2500 1/min.	-20 & 80 °C	12 & 100 cSt	G 1"	G 1"	12,5 kg

Torgue - Pressure charesteristics

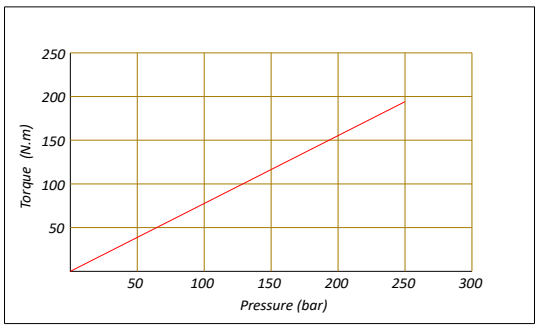

Pressure definition

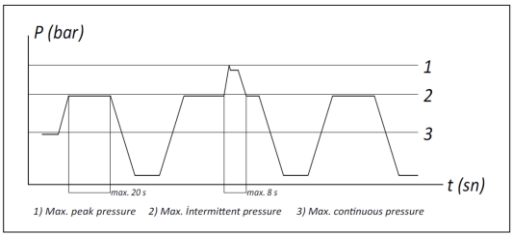

Hydraulic Pump Symbol

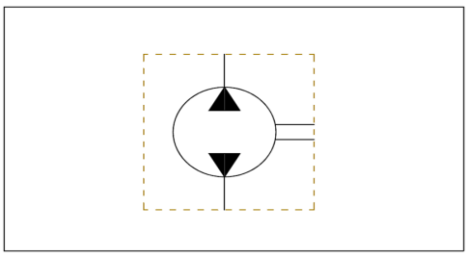

30-51 UNI 3 Bolt Bi-Rotational Gear Pump 4 Port

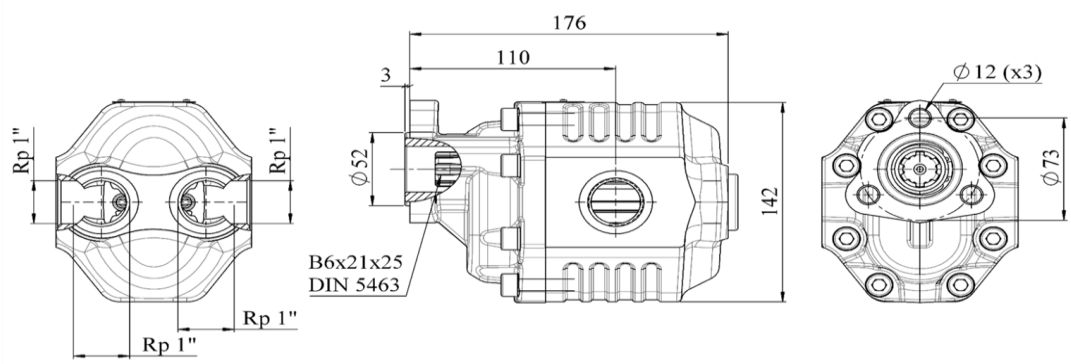

Specifications

Product Code	Displacement	Rotation	Working Pressure	Max.intermittent pressure	Max.peak pressure	Max.continuous speed	Max.speed at intermit. pressure	Oil temperature	Operating Viscosity Range	Oil inlet diameter	Oil Outlet diameter	Weight
33005141	51 cc/rev.	bi-rotational	240 bar	260 bar	280 bar	2000 1/min.	2500 1/min.	-20 & 80 °C	12 & 100 cSt	G 1"	G 1"	12,8 kg

Torgue - Pressure charesteristics

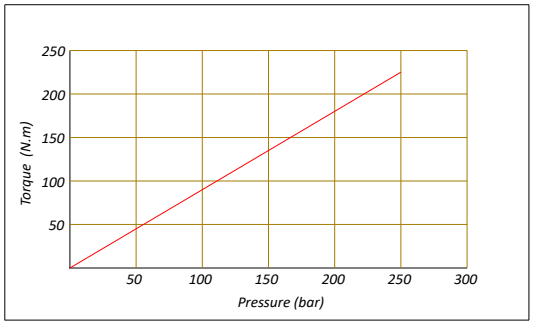

Pressure definition

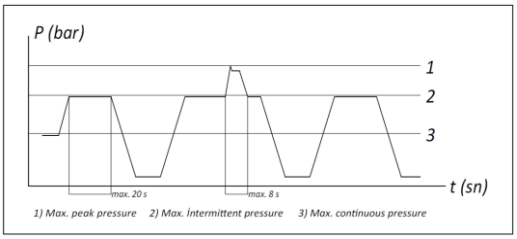

Hydraulic Pump Symbol

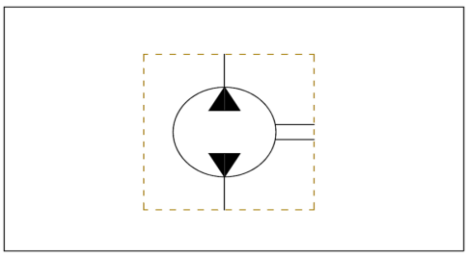

30-61 UNI 3 Bolt Bi-Rotational Gear Pump 4 Port

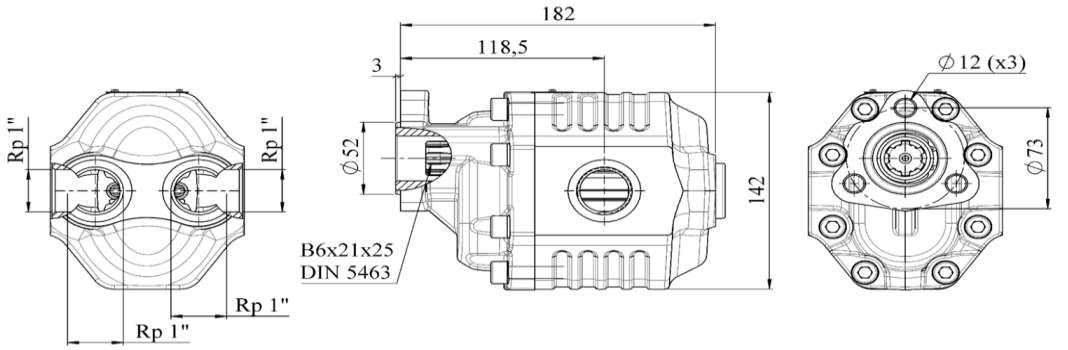

Specifications

Product Code	Displacement	Rotation	Working Pressure	Max.intermittent pressure	Max.peak pressure	Max.continuous speed	Max.speed at intermit. pressure	Oil temperature	Operating Viscosity Range	Oil inlet diameter	Oil Outlet diameter	Weight
33006141	61 cc/rev.	bi-rotational	220 bar	240 bar	250 bar	1900 1/min.	2500 1/min.	-20 & 80 °C	12 & 100 cSt	G 1"	G 1"	13,3 kg

Torgue - Pressure charesteristics

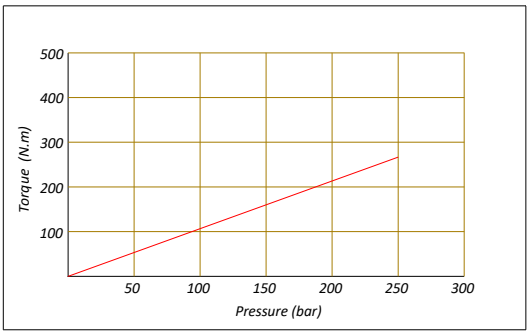

Pressure definition

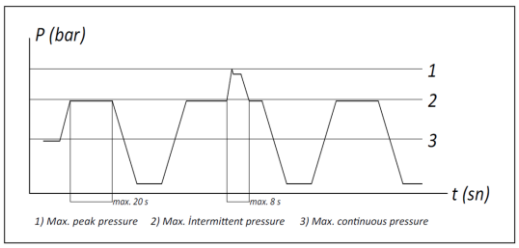

Hydraulic Pump Symbol

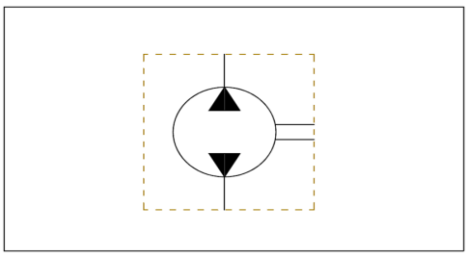

30-82 UNI 3 Bolt Bi-Rotational Gear Pump 4 Port

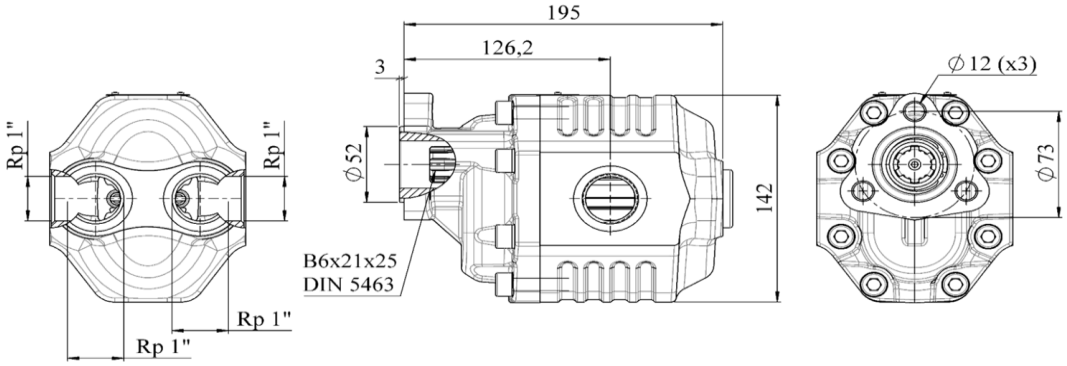

Specifications

Product Code	Displacement	Rotation	Working Pressure	Max.intermittent pressure	Max.peak pressure	Max.continuous speed	Max.speed at intermit. pressure	Oil temperature	Operating Viscosity Range	Oil inlet diameter	Oil Outlet diameter	Weight
33008241	82 cc/rev.	bi-rotational	205 bar	225 bar	230 bar	1900 1/min.	2500 1/min.	-20 & 80 °C	12 & 100 cSt	G 1"	G 1"	14,4 kg

Torgue - Pressure charesteristics

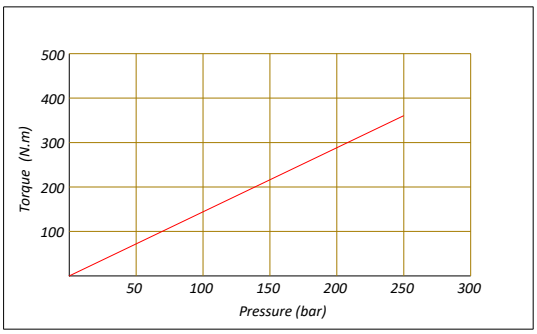

Pressure definition

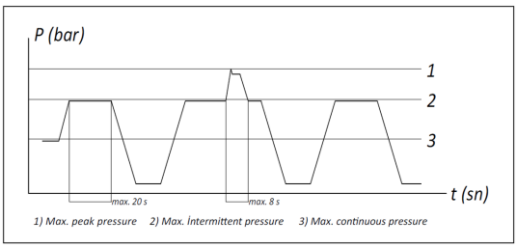

Hydraulic Pump Symbol

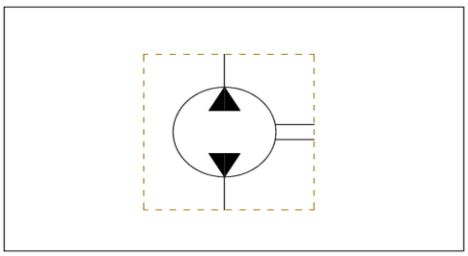

30-92 UNI 3 Bolt Bi-Rotational Gear Pump 4 Port

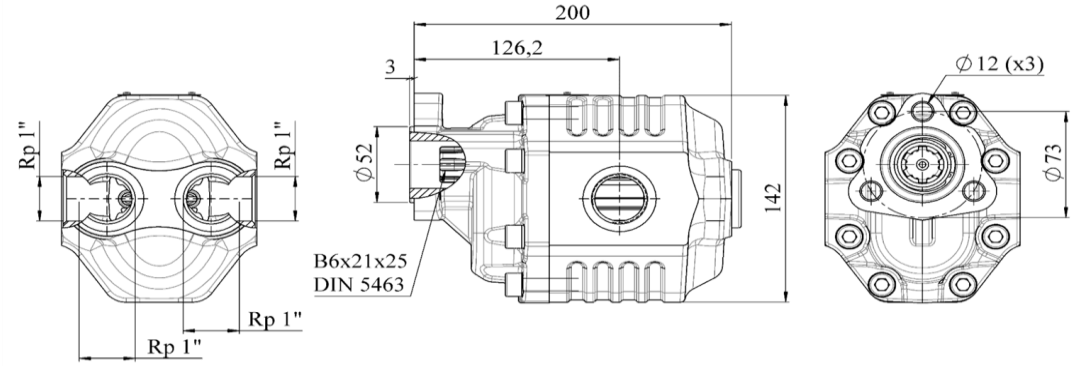

Specifications

Product Code	Displacement	Rotation	Working Pressure	Max.intermittent pressure	Max.peak pressure	Max.continuous speed	Max.speed at intermit. pressure	Oil temperature	Operating Viscosity Range	Oil inlet diameter	Oil Outlet diameter	Weight
33009241	92 cc/rev.	bi-rotational	180 bar	200 bar	220 bar	1900 1/min.	2500 1/min.	-20 & 80 °C	12 & 100 cSt	G 1"	G 1"	14,9 kg

Torgue - Pressure charesteristics

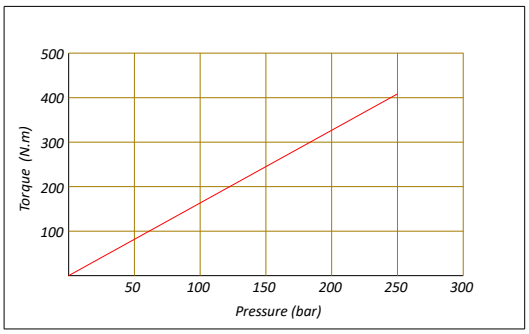

Pressure definition

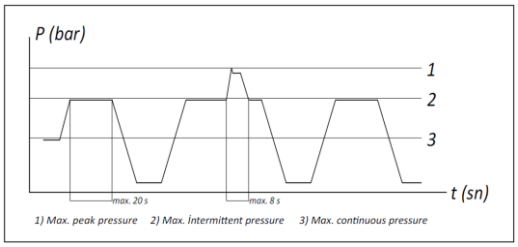

Hydraulic Pump Symbol

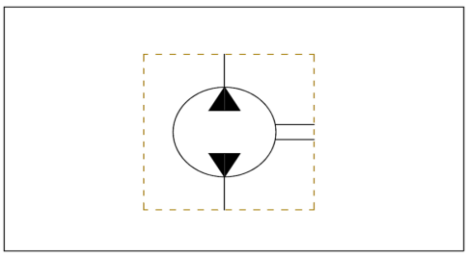

30-100 UNI 3 Bolt Bi-Rotational Gear Pump 4 Port

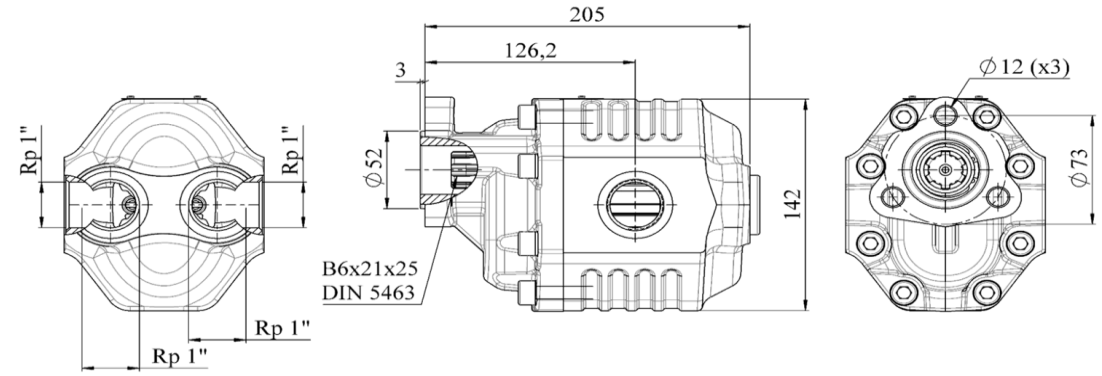

Specifications

Product Code	Displacement	Rotation	Working Pressure	Max.intermittent pressure	Max.peak pressure	Max.continuous speed	Max.speed at intermit. pressure	Oil temperature	Operating Viscosity Range	Oil inlet diameter	Oil Outlet diameter	Weight
33010041	100 cc/rev.	bi-rotational	180 bar	200 bar	220 bar	1500 1/min.	1800 1/min.	-20 & 80 °C	12 & 100 cSt	G 1"	G 1"	15,3 kg

Torgue - Pressure charesteristics

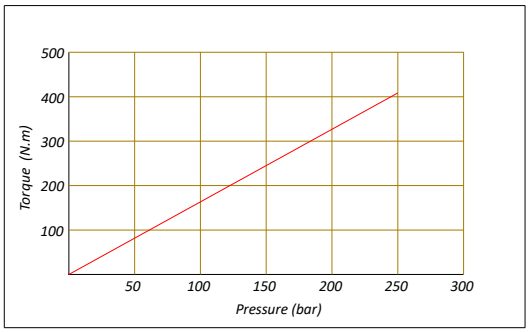

Pressure definition

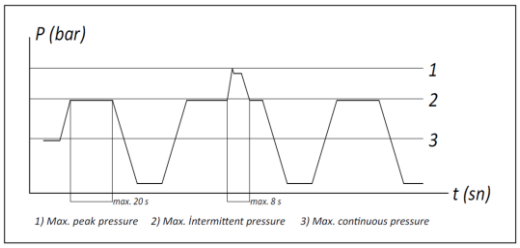

Hydraulic Pump Symbol

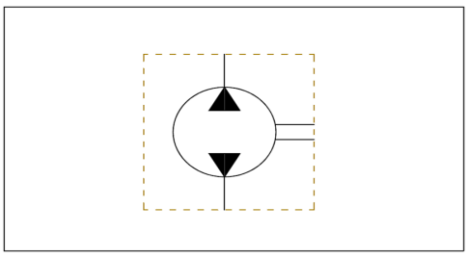

30 SINGLE ROTATIONAL UNI

30 TEK DÖNÜŞLÜ UNI

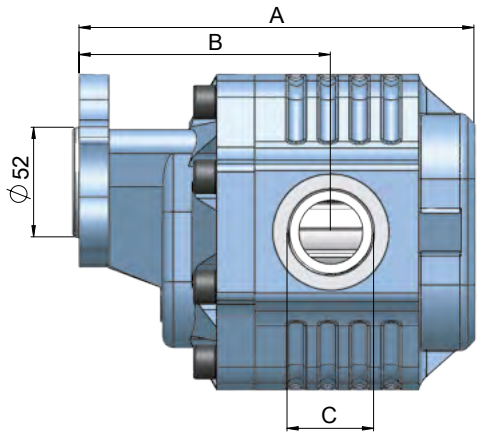

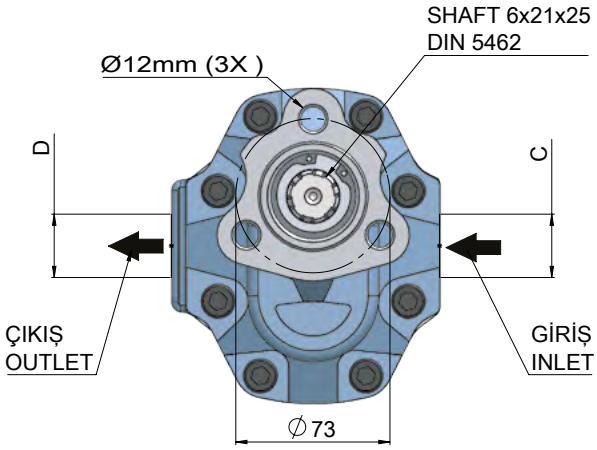

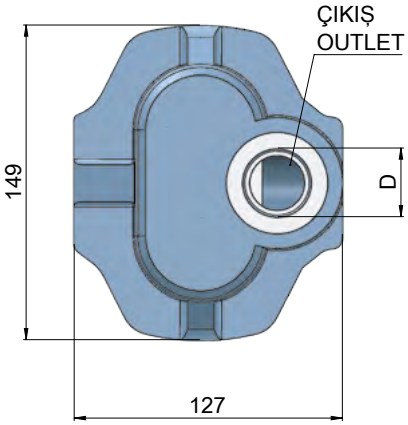

CODE KOD	ROTATION YÖN	DISPLACEMENT DEBİ (Lt/min)	A (mm)	B (mm)	INLET GİRİŞ (C)	OUTLET ÇIKIŞ (D)	Max. Continuous Pressure Max. Sürekli Basınç(Pnom)	Max. Peak Pressure Max. Pik Basınç (Pmax)
33001711	RIGHT/SAĞ	17	150,5	105,5	R1/2"-14	R1/2"-14	265	300
33001712	LEFT/SOL							
33002711	RIGHT/SAĞ	27	157,5	109,5	R3/4"-14	R3/4"-14	260	290
33002712	LEFT/SOL							
33003411	RIGHT/SAĞ	34	162,5	111,5			250	280
33003412	LEFT/SOL							
33004311	RIGHT/SAĞ	43	169,5	114,5	R1"-11		240	270
33004312	LEFT/SOL							
33005111	RIGHT/SAĞ	51	172,5	116,5		R1"-11	220	250
33005112	LEFT/SOL							
33006111	RIGHT/SAĞ	61	180,5	117,5	R1 1/4"-11		210	240
33006112	LEFT/SOL							
33008211	RIGHT/SAĞ	82	294,5	126,5			180	220
33008212	LEFT/SOL							

30 SAE A SERIES BI-ROTATIONAL

30 SAE A SERİSİ ÇİFT DÖNÜŞLÜ

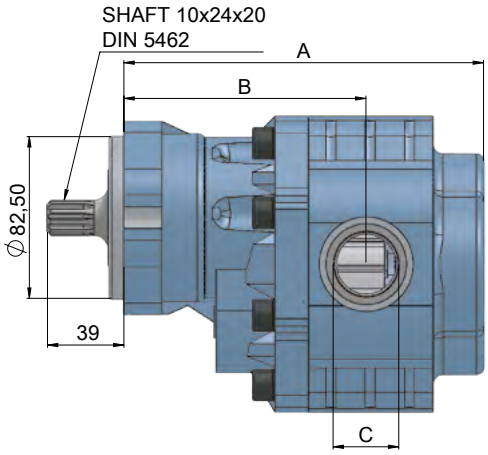

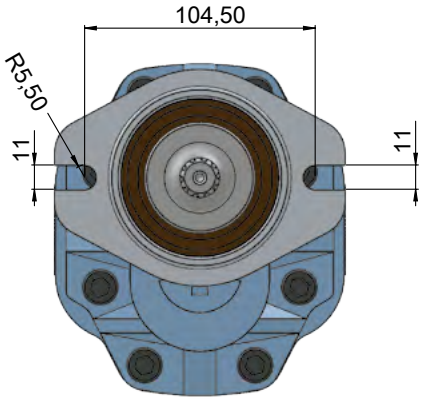

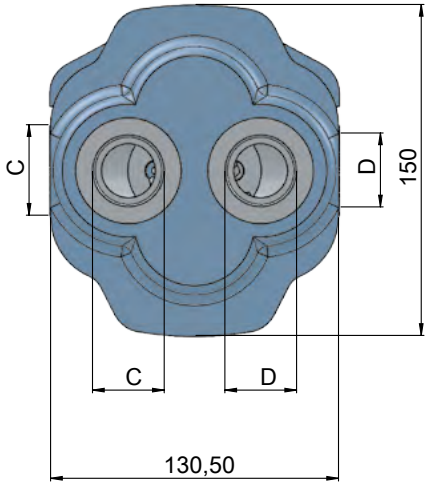

CODE KOD	ROTATION YÖN	DISPLACEMENT DEBİ (Lt/min)	A (mm)	B (mm)	INLET GİRİŞ (C)	OUTLET ÇIKIŞ (D)	Max. Continuous Pressure Max. Sürekli Basınç(Pnom)	Max. Peak Pressure Max. Pik Basınç (Pmax)
33003461	BI-ROTATIONAL-ÇİFT	34	199	146	R3/4"-14	R3/4"-14	250	280
33004361	BI-ROTATIONAL-ÇİFT	43	207	149			240	270
33005161	BI-ROTATIONAL-ÇİFT	51	210	151	R1"-14	R1"-14	220	250
33006161	BI-ROTATIONAL-ÇİFT	61	216	152			210	240
33008261	BI-ROTATIONAL-ÇİFT	82	226	161			180	220

30 SAE A SERIES SINGLE ROTATIONAL

30 SAE A SERİSİ TEK DÖNÜŞLÜ

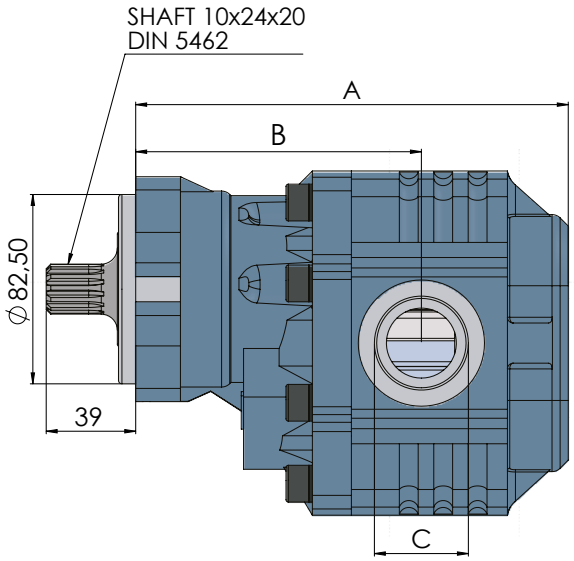

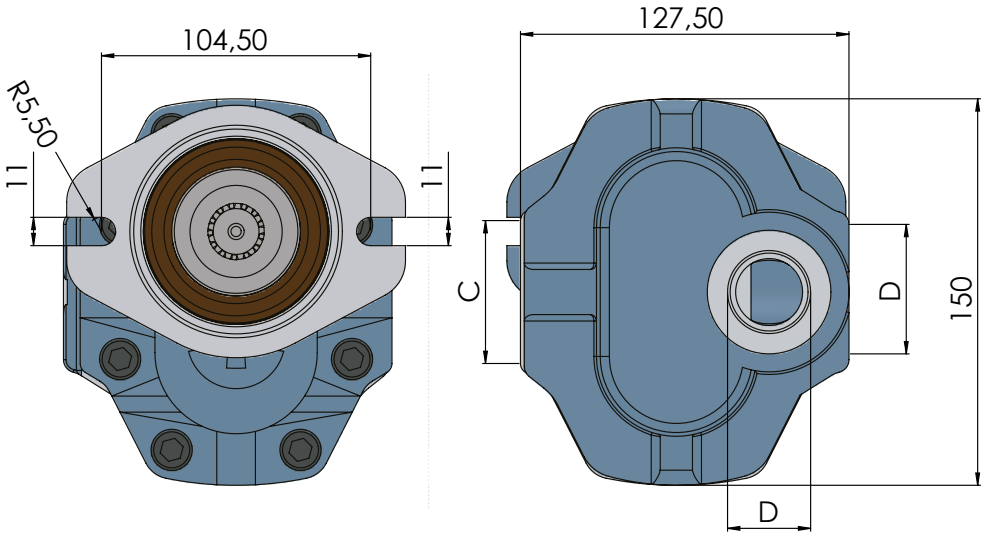

CODE KOD	ROTATION YÖN	DISPLACEMENT DEBİ (Lt/min)	A (mm)	B (mm)	INLET GİRİŞ (C)	OUTLET ÇIKIŞ (D)	Max. Continuous Pressure Max. Sürekli Basınç(Pnom)	Max. Peak Pressure Max. Pik Basınç (Pmax)
33001762	RIGHT/SAĞ	17	171	126	R1/2"-14	R1/2"-14	265	300
33001763	LEFT/SOL							
33002762	RIGHT/SAĞ	27	178	130	R3/4"-14	R3/4"-14	260	290
33002763	LEFT/SOL							
33003462	RIGHT/SAĞ	34	183	132			250	280
33003463	LEFT/SOL							
33004362	RIGHT/SAĞ	43	190	135	R1"-11		240	270
33004363	LEFT/SOL							
33005162	RIGHT/SAĞ	51	193	137		R1"-11	220	250
33005163	LEFT/SOL							
33006162	RIGHT/SAĞ	61	201	138	R1 1/4"-11		210	240
33006163	LEFT/SOL							
33008262	RIGHT/SAĞ	82	315	147			180	220
33008263	LEFT/SOL							

30 SAE B SERIES BI-ROTATIONAL

30 SAE B SERİSİ ÇİFT DÖNÜŞLÜ

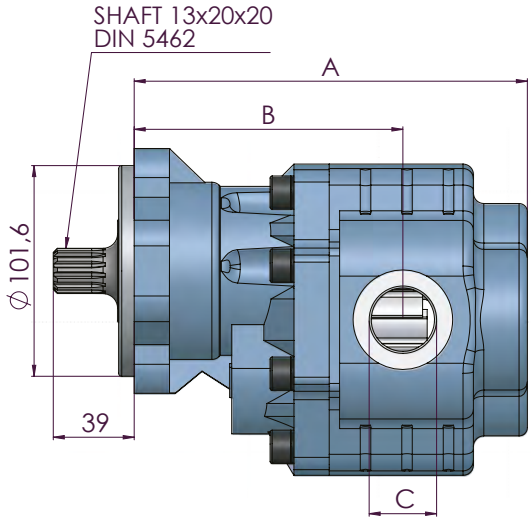

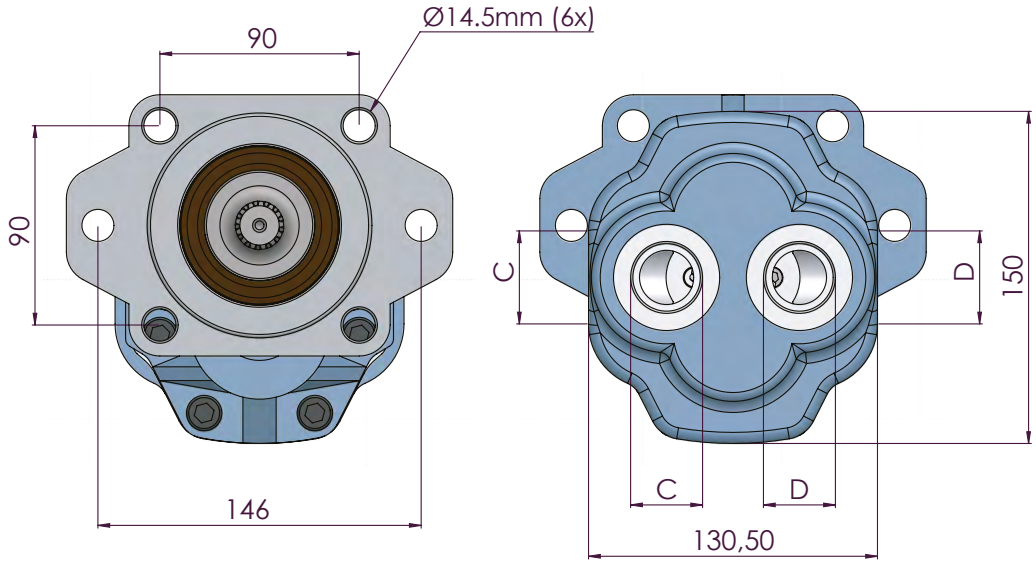

CODE KOD	ROTATION YÖN	DISPLACEMENT DEBİ (Lt/min)	A (mm)	B (mm)	INLET GİRİŞ (C)	OUTLET ÇIKIŞ (D)	Max. Continuous Pressure Max. Sürekli Basınç(Pnom)	Max. Peak Pressure Max. Pik Basınç (Pmax)
33003471	BI-ROTATIONAL-ÇİFT	34	199	146	R3/4"-14	R3/4"-14	250	280
33004371	BI-ROTATIONAL-ÇİFT	43	207	149			240	270
33005171	BI-ROTATIONAL-ÇİFT	51	210	151	R1"-14	R1"-14	220	250
33006171	BI-ROTATIONAL-ÇİFT	61	216	152			210	240
33008271	BI-ROTATIONAL-ÇİFT	82	226	161			180	220

30 SAE B SERIES SINGLE ROTATIONAL

30 SAE B SERİSİ TEK DÖNÜŞLÜ

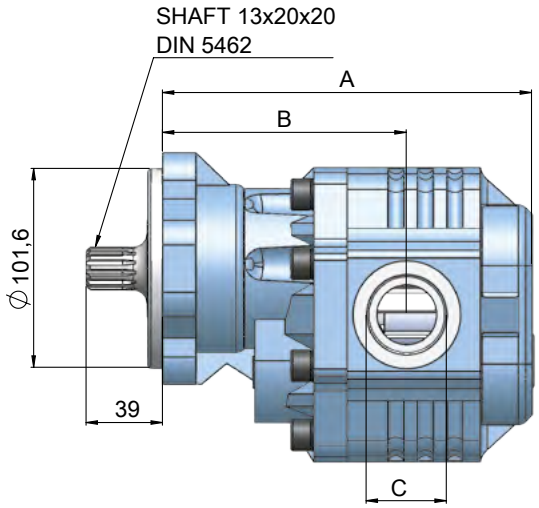

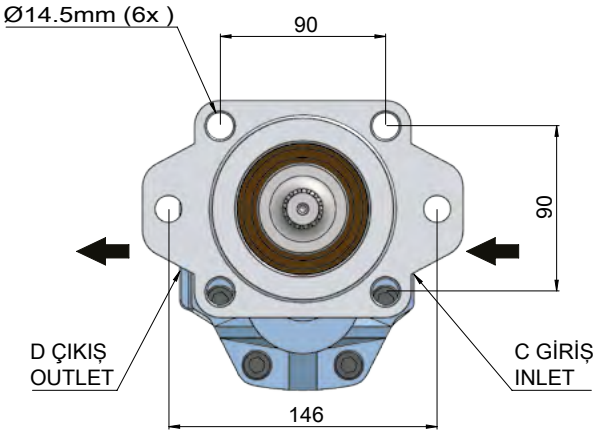

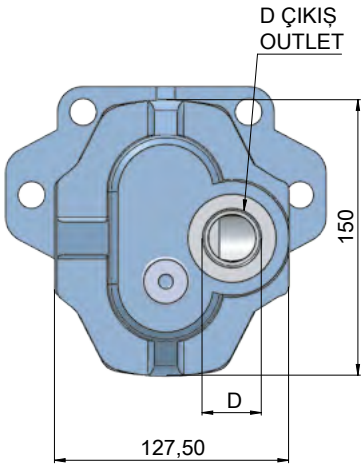

CODE KOD	ROTATION YÖN	DISPLACEMENT DEBİ (Lt/min)	A (mm)	B (mm)	INLET GİRİŞ (C)	OUTLET ÇIKIŞ (D)	Max. Continuous Pressure Max. Sürekli Basınç(Pnom)	Max. Peak Pressure Max. Pik Basınç (Pmax)
33001772	RIGHT/SAĞ	17	171	126	R1/2"-14	R1/2"-14	265	300
33001773	LEFT/SOL							
33002772	RIGHT/SAĞ	27	178	130	R3/4"-14	R3/4"-14	260	290
33002773	LEFT/SOL							
33003472	RIGHT/SAĞ	34	183	132			250	280
33003473	LEFT/SOL							
33004372	RIGHT/SAĞ	43	190	135	R1"-11		240	270
33004373	LEFT/SOL							
33005172	RIGHT/SAĞ	51	193	137		R1"-11	220	250
33005173	LEFT/SOL							
33006172	RIGHT/SAĞ	61	201	138	R1 1/4"-11		210	240
33006173	LEFT/SOL							
33008272	RIGHT/SAĞ	82	315	147			180	220
33008273	LEFT/SOL							

30 K SERIES
30 K SERİSİ

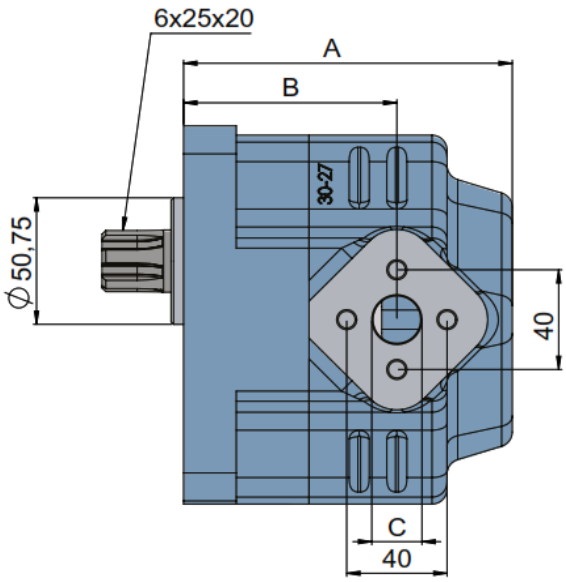

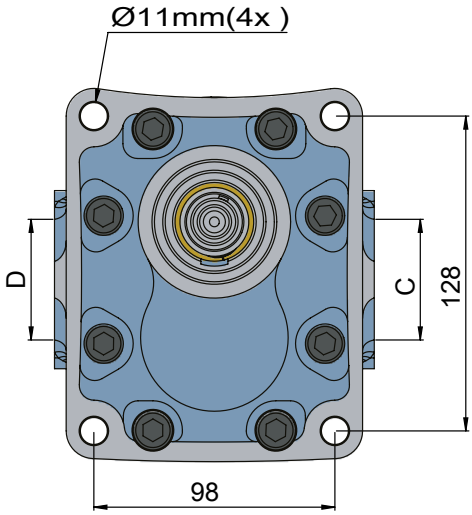

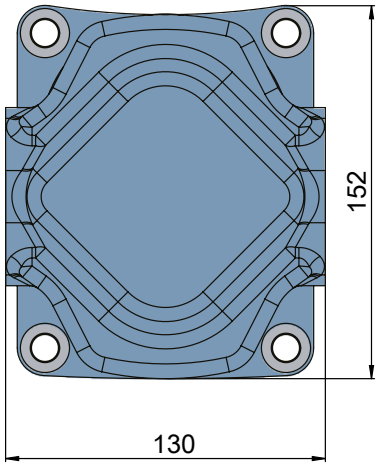

CODE KOD	ROTATION YÖN	DISPLACEMENT DEBİ (Lt/min)	A (mm)	B (mm)	INLET GİRİŞ (C)	OUTLET ÇIKIŞ (D)	Max. Continuous Pressure Max. Sürekli Basınç(Pnom)	Max. Peak Pressure Max. Pik Basınç (Pmax)
33611711	RIGHT/SAĞ	17	125	79	Ø27-M10x4	Ø19-M8x4	265	300
33611712	LEFT/SOL							
33612711	RIGHT/SAĞ	27	131	85			260	290
33612712	LEFT/SOL							
33613411	RIGHT/SAĞ	34	136	90			250	280
33613412	LEFT/SOL							
33614311	RIGHT/SAĞ	43	142	96			240	270
33614312	LEFT/SOL							
33615111	RIGHT/SAĞ	51	147	101			220	250
33615112	LEFT/SOL							
33616111	RIGHT/SAĞ	61	152	106			210	240
33616112	LEFT/SOL							

30 K SERIES CONICAL SHAFT

30 K SERİSİ KONİK MİL

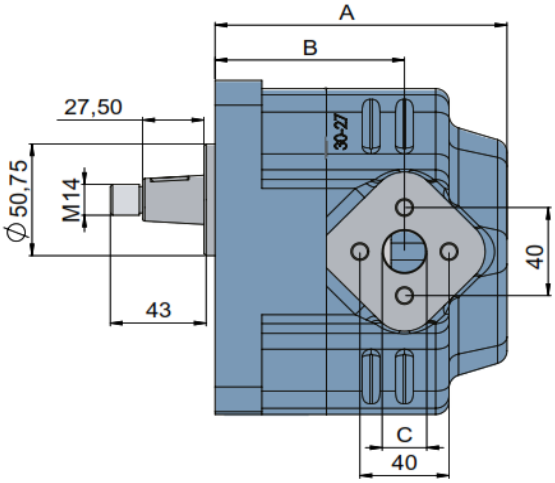

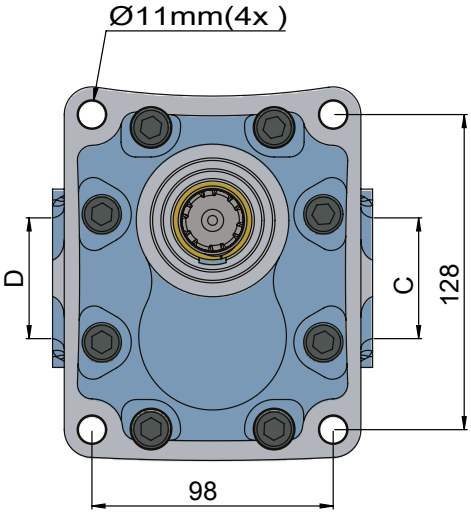

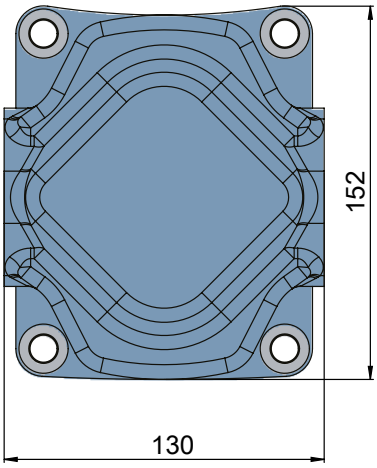

CODE KOD	ROTATION YÖN	DISPLACEMENT DEBİ (Lt/min)	A (mm)	B (mm)	INLET GİRİŞ (C)	OUTLET ÇIKIŞ (D)	Max. Continuous Pressure Max. Sürekli Basınç(Pnom)	Max. Peak Pressure Max. Pik Basınç (Pmax)
33601711	RIGHT/SAĞ	17	125	79	Ø27-M10x4	Ø19-M8x4	265	300
33601712	LEFT/SOL							
33602711	RIGHT/SAĞ	27	131	85			260	290
33602712	LEFT/SOL							
33603411	RIGHT/SAĞ	34	136	90			250	280
33603412	LEFT/SOL							
33604311	RIGHT/SAĞ	43	142	96			240	270
33604312	LEFT/SOL							
33605111	RIGHT/SAĞ	51	147	101			220	250
33605112	LEFT/SOL							
33606111	RIGHT/SAĞ	61	152	106			210	240
33606112	LEFT/SOL							

30 DPM MECHANIC VALVE BI-ROTATIONAL

30 DPM MEKANİK VENTİLLİ ÇİFT DÖNÜŞLÜ

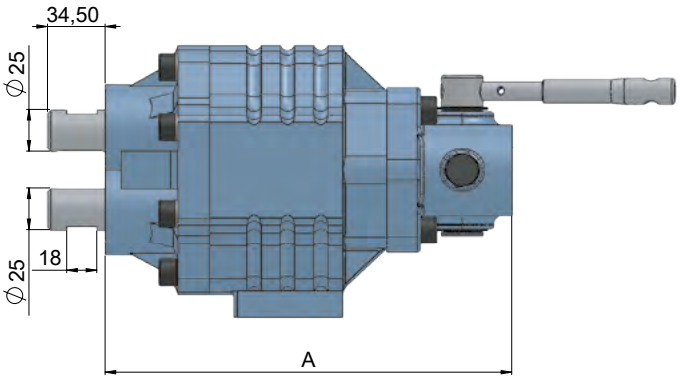

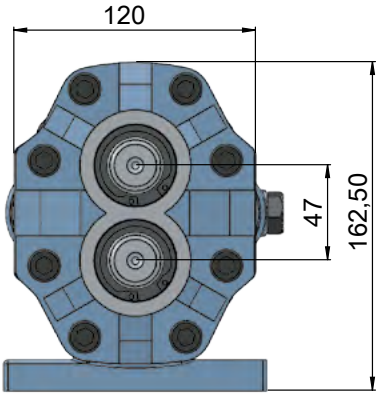

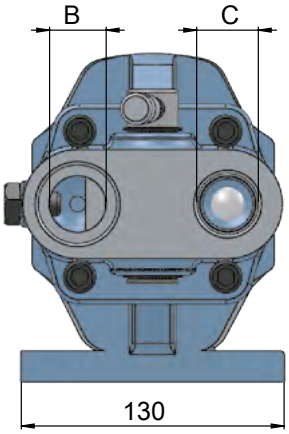

CODE KOD	ROTATION YÖN	DISPLACEMENT DEBİ (Lt/min)	A (mm)	INLET GİRİŞ (B)	OUTLET ÇIKIŞ (C)	Max. Continuous Pressure Max. Sürekli Basınç(Pnom)	Max. Peak Pressure Max. Pik Basınç (Pmax)
33004371	BI-ROTATIONAL-ÇİFT	43	220	R1 1/4"-11	R1"-11	240	270
33006171	BI-ROTATIONAL-ÇİFT	61	230			210	240
33008271	BI-ROTATIONAL-ÇİFT	82	243			180	220

30 T2 SERIES BI-ROTATIONAL

30 T2 SERİSİ ÇİFT DÖNÜŞLÜ

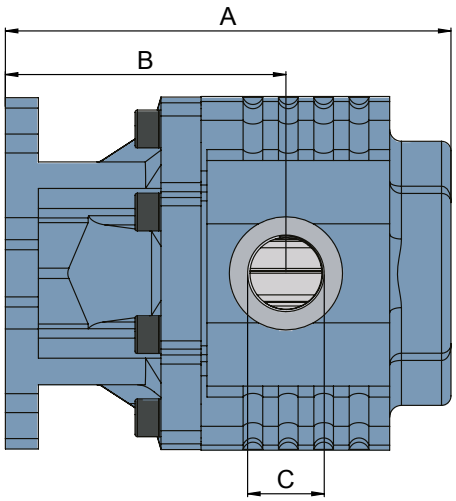

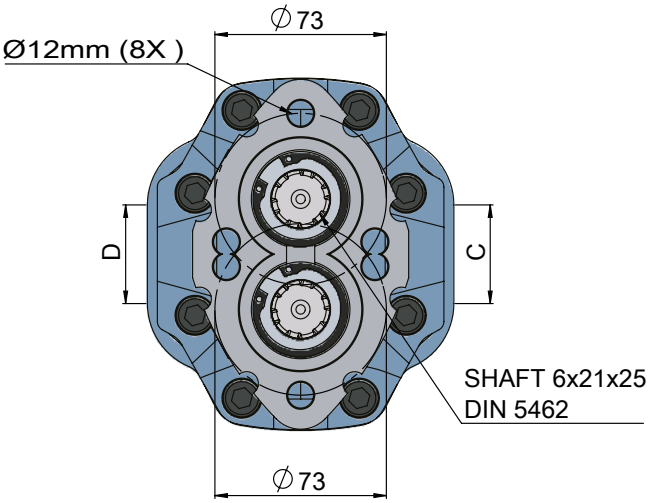

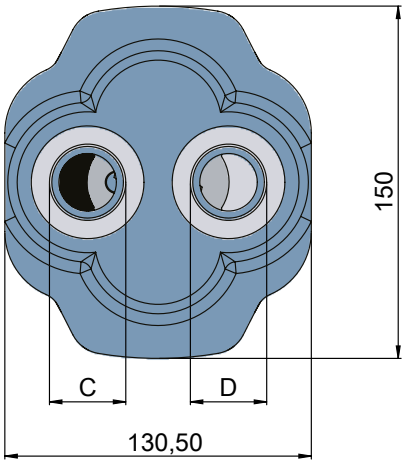

CODE KOD	ROTATION YÖN	DISPLACEMENT DEBİ (Lt/min)	A (mm)	B (mm)	INLET GİRİŞ (C)	OUTLET ÇIKIŞ (D)	Max. Continuous Pressure Max. Sürekli Basınç(Pnom)	Max. Peak Pressure Max. Pik Basınç (Pmax)
33001723	BI-ROTATIONAL-ÇİFT	17	147,5	102,5	R1/2"-14	R1/2"-14	265	300
33002723	BI-ROTATIONAL-ÇİFT	27	154,5	106,5	R3/4"-14	R3/4"-14	260	290
33003423	BI-ROTATIONAL-ÇİFT	34	159,5	108,5			250	280
33004323	BI-ROTATIONAL-ÇİFT	43	166,5	111,5	R1"-11		240	270
33005123	BI-ROTATIONAL-ÇİFT	51	169,5	113,5		R1"-11	220	250
33006123	BI-ROTATIONAL-ÇİFT	61	177,5	114,5	R1 1/4"-11		210	240
33008223	BI-ROTATIONAL-ÇİFT	82	291,5	123,5			180	220

30 DPV PNEUMATIC VALVES BI-ROTATIONAL

30 DPV PNÖMATİK VENTİLLİ ÇİFT DÖNÜŞLÜ

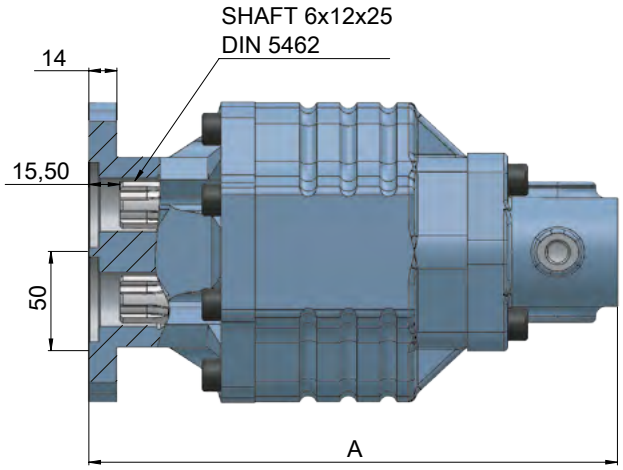

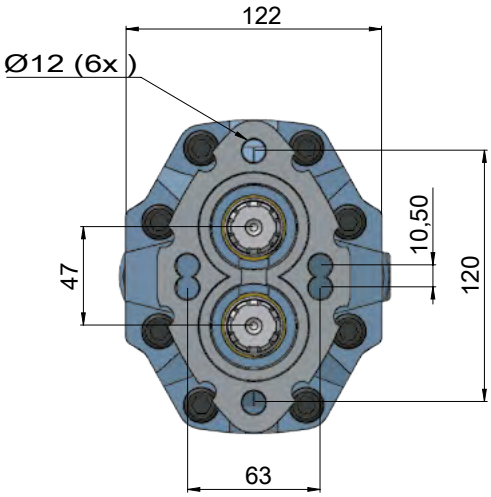

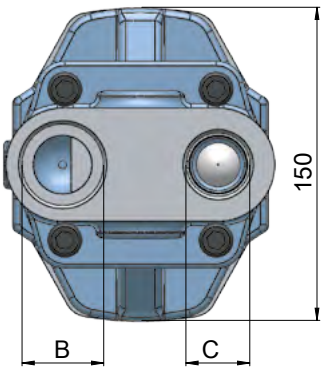

CODE KOD	ROTATION YÖN	DISPLACEMENT DEBİ (Lt/min)	A (mm)	INLET GİRİŞ (B)	OUTLET ÇIKIŞ (C)	Max. Continuous Pressure Max. Sürekli Basınç(Pnom)	Max. Peak Pressure Max. Pik Basınç (Pmax)
33006181	BI-ROTATIONAL-ÇİFT	61	237	R1 1/4"-11	R1"-11	210	240
33008281	BI-ROTATIONAL-ÇİFT	82	247			180	220
33009581	BI-ROTATIONAL-ÇİFT	95	258			170	210

30 DPV PNEUMATIC VALVE SINGLE ROTATIONAL

30 DPV PNÖMATİK VENTİLLİ TEK DÖNÜŞLÜ

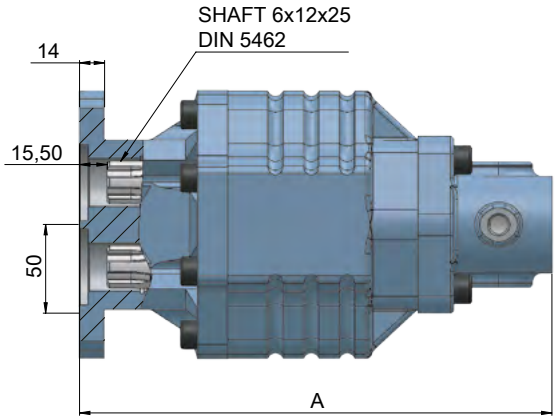

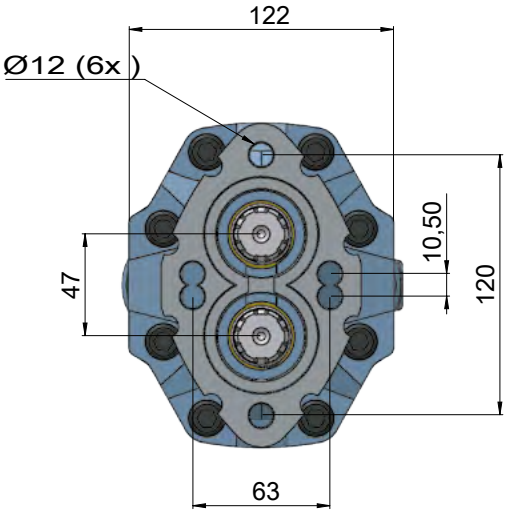

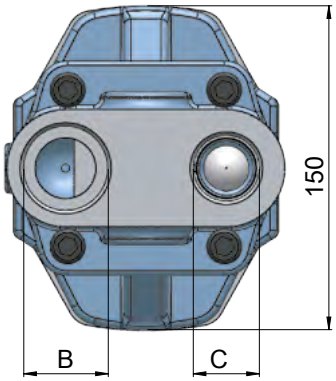

CODE KOD	ROTATION YÖN	DISPLACEMENT DEBİ (Lt/min)	A (mm)	INLET GİRİŞ (B)	OUTLET ÇIKIŞ (C)	Max. Continuous Pressure Max. Sürekli Basınç(Pnom)	Max. Peak Pressure Max. Pik Basınç (Pmax)
33006182	RIGHT/SAĞ	61	240	R1 1/4"-11	R1"-11	210	240
33006183	LEFT/SOL						
33008282	RIGHT/SAĞ	82	264			210	264
33008283	LEFT/SOL						

30 SERIE TANDEM GEAR PUMPS ISO

30 SERİ DİŞLİ POMPA TANDEM ISO DİŞLİ POMPALAR

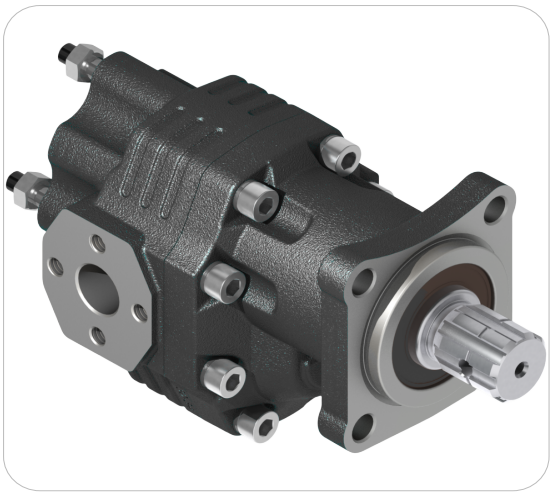

Inlet Pressure	0.3÷ 2 bar
Operating Viscosity	-12:100 cSt
Fluid Temperature	-40 ºC+145 ºC

Working Pressure	Contamination NAS 1638	Contamination ISO 4406	Filtre βx=75
≥200 bar	11	20/17	25 µm
≤200 bar	12	21/18	40 µm

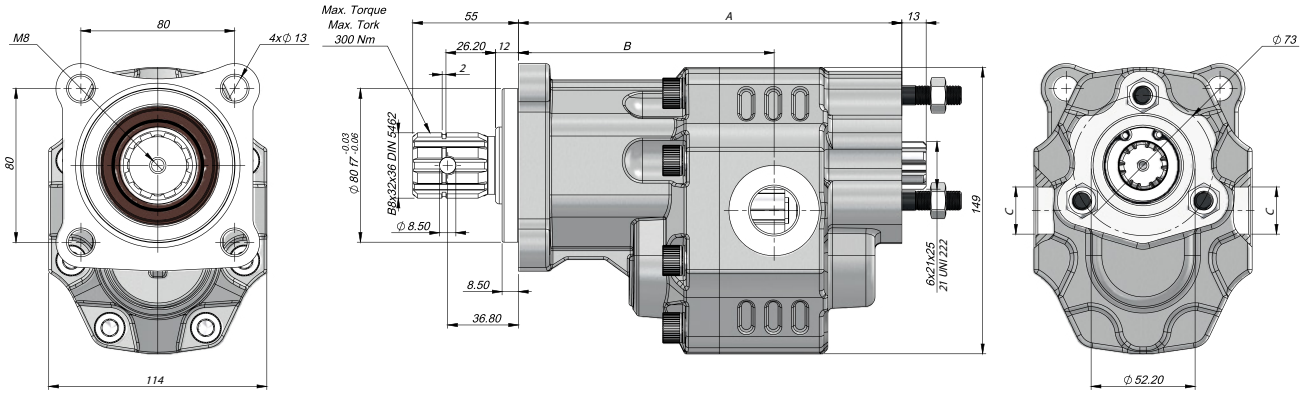

Code			Displacement	Max.Continuous Pressure	Min. Speed	Max.Continuous Speed	A	B	Inlet	Outlet
Left	Right	Bi-Rotational	(cm³/rev)	(%100) (BAR)	(RPM)	(RPM)	(mm)	(mm)	C	D
33001732TAN	33001731TAN	3017GM131	17	300	300	2600	182,5	123,5	G 1/2"	G 1/2"
33002732TAN	33002731TAN	3027GM131	27	290			188,5	126,5		
33003432TAN	33003431TAN	3034GM131	34	285		2300	193,5	128,5	G 3/4"	G 3/4"
33003632TAN	33003631TAN	3036GM131	36				195,0	128,5		
33003832TAN	33003831TAN	3038GM131	38				193,5	128,5		
33004332TAN	33004331TAN	3043GM131	43	280		2100	199,5	133,0		
33005132TAN	33005131TAN	3051GM131	51	230			204,5	134,5		
33006132TAN	33006131TAN	3061GM131	61	225		2000	212,5	138,5	G 1"	G 1"
33007332TAN	33007331TAN	3073GM131	73	215		1800	217,5	146,5		
33008232TAN	33008231TAN	3082GM131	82	200		1700	223,5	146,0		
33010032TAN	33010031TAN	3100GM131	100	190		1600	236,5	160,0	G1 1/4"	G1 1/4"
33012532TAN	33012531TAN	3125GM131	125	170			252,5	164,0		

*The values in the table refer to unidirectional pumps. Reversible pump max pressures are 10% lower than those shown in table. For different working conditions please consult our sales department.

30 SERIE GEAR PUMP TANDEM UNI

30 SERİ TANDEM UNI DİŞLİ POMPALAR

Inlet Pressure	0.3÷ 2 bar
Operating Viscosity	-12:100 cSt
Fluid Temperature	-40 ºC+145 ºC

Working Pressure	Contamination NAS 1638	Contamination ISO 4406	Filtre βx=75
≥200 bar	11	20/17	25 µm
≤200 bar	12	21/18	40 µm

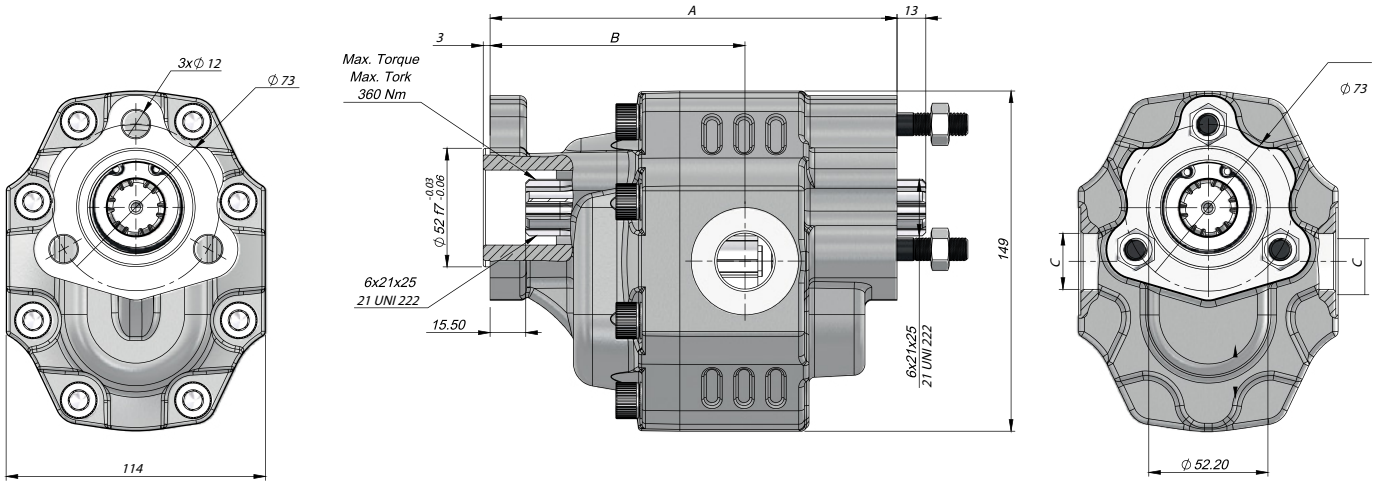

Code			Displacement	Max.Continuous Pressure	Min. Speed	Max.Continuous Speed	A	B	Inlet	Outlet
Left	Right	Bi-Rotational	(cm³/rev)	(%100) (BAR)	(RPM)	(RPM)	(mm)	(mm)	C	D
33001712TAN	33001711TAN	3017GM431	17	300	300	2600	161,0	102,0	G 1/2"	G 1/2"
33002712TAN	33002711TAN	3027GM431	27	290			167,0	105,0		
33003412TAN	33003411TAN	3034GM431	34	285		2300	172,0	107,0	G 3/4"	G 3/4"
33003612TAN	33003611TAN	3036GM431	36				173,5	118,5		
33003812TAN	33003811TAN	3038GM431	38				174,0	118,5		
33004312TAN	33004311TAN	3043GM431	43	280		2100	176,0	111,5		
33005112TAN	33005111TAN	3051GM431	51	230			183,0	113,0		
33006112TAN	33006111TAN	3061GM431	61	225		2000	191,0	117,0	G 1"	G 1"
33007312TAN	33007311TAN	3073GM431	73	215		1800	196,0	125,0		
33008212TAN	33008211TAN	3082GM431	82	200		1700	202,0	124,5		
33010012TAN	33010011TAN	3100GM431	100	190		1600	215,0	138,5	G1 1/4"	G1 1/4"
33012512TAN	33012511TAN	3125GM431	125	170			231,0	142,5		

*The values in the table refer to unidirectional pumps. Reversible pump max pressures are 10% lower than those shown in table. For different working conditions please consult our sales department.

30 SERIE TANDEM GEAR PUMPS ASAE LONG SHAFT

30 SERİ TANDEM ASAE UZUN MİL DİŞLİ POMPALAR

Inlet Pressure	0.3÷ 2 bar
Operating Viscosity	-12:100 cSt
Fluid Temperature	-40 ºC+145 ºC

Working Pressure	Contamination NAS 1638	Contamination ISO 4406	Filtre βx=75
≥200 bar	11	20/17	25 µm
≤200 bar	12	21/18	40 µm

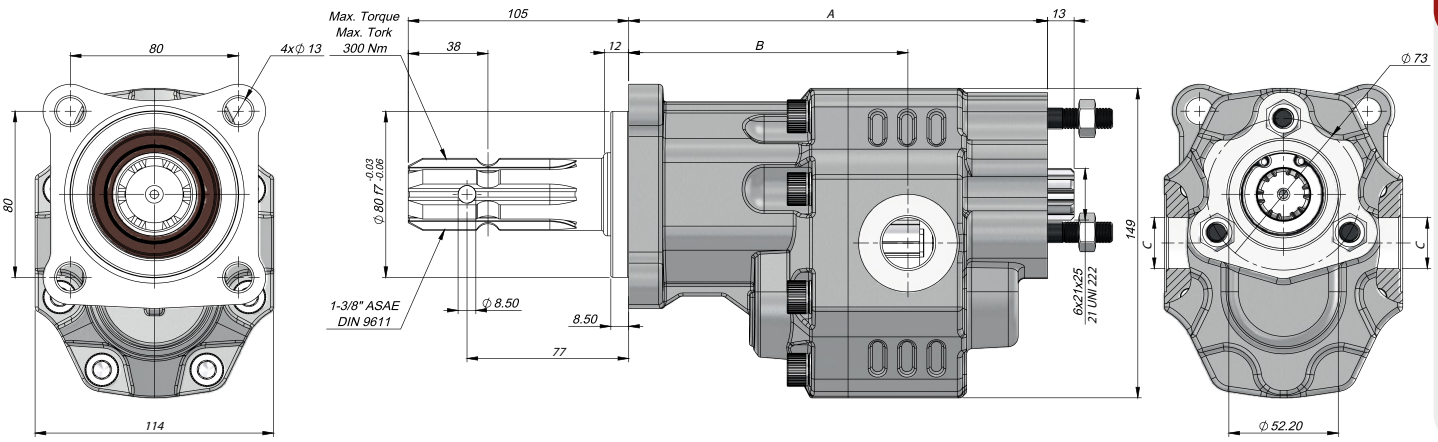

Code			Displacement	Max.Continuous Pressure	Min. Speed	Max.Continuous Speed	A	B	Inlet	Outlet
Left	Right	Bi-Rotational	(cm³/rev)	(%100) (BAR)	(RPM)	(RPM)	(mm)	(mm)	C	D
33301712TAN	33301731TAN	3017AL331	17	300	300	2600	182,5	123,5	G 1/2"	G 1/2"
33302712TAN	33302711TAN	3027AL331	27	290			188,5	126,5		
33303412TAN	33303411TAN	3034AL331	34	285		2300	193,5	128,5	G 3/4"	G 3/4"
33303612TAN	33303611TAN	3036AL331	36				195,0	128,5		
33303812TAN	33303811TAN	3038AL331	38				193,5	128,5		
33304312TAN	33304311TAN	3043AL331	43	280		2100	199,5	133,0		
33305112TAN	33305111TAN	3051AL331	51	230			204,5	134,5		
33306112TAN	33306111TAN	3061AL331	61	225		2000	212,5	138,5	G 1"	G 1"
33007312TAN	33307311TAN	3073AL331	73	215		1800	217,5	146,5		
33308212TAN	33308211TAN	3082AL331	82	200		1700	223,5	146,0		
33110012TAN	33310011TAN	3100AL331	100	190		1600	236,5	160,0	G1 1/4"	G1 1/4"
33312512TAN	33312511TAN	3125AL331	125	170			252,5	164,0		

*The values in the table refer to unidirectional pumps. Reversible pump max pressures are 10% lower than those shown in table. For different working conditions please consult our sales department.

30 SERIE TANDEM GEAR PUMPS ASAE SHORT SHAFT

30 SERİ TANDEM ASAE KISA MİL DİŞLİ POMPALAR

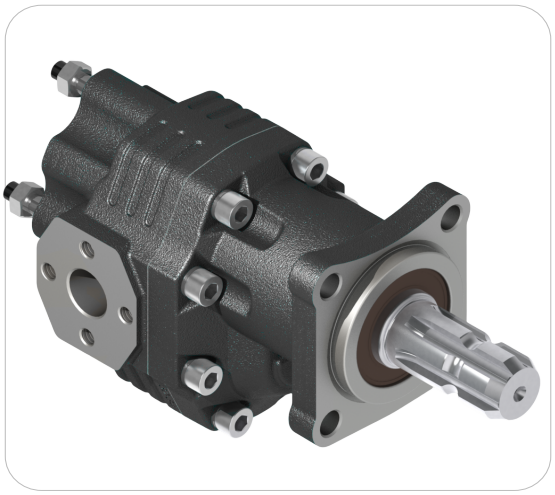

Inlet Pressure	0.3÷ 2 bar
Operating Viscosity	-12:100 cSt
Fluid Temperature	-40 ºC+145 ºC

Working Pressure	Contamination NAS 1638	Contamination ISO 4406	Filtre βx=75
≥200 bar	11	20/17	25 µm
≤200 bar	12	21/18	40 µm

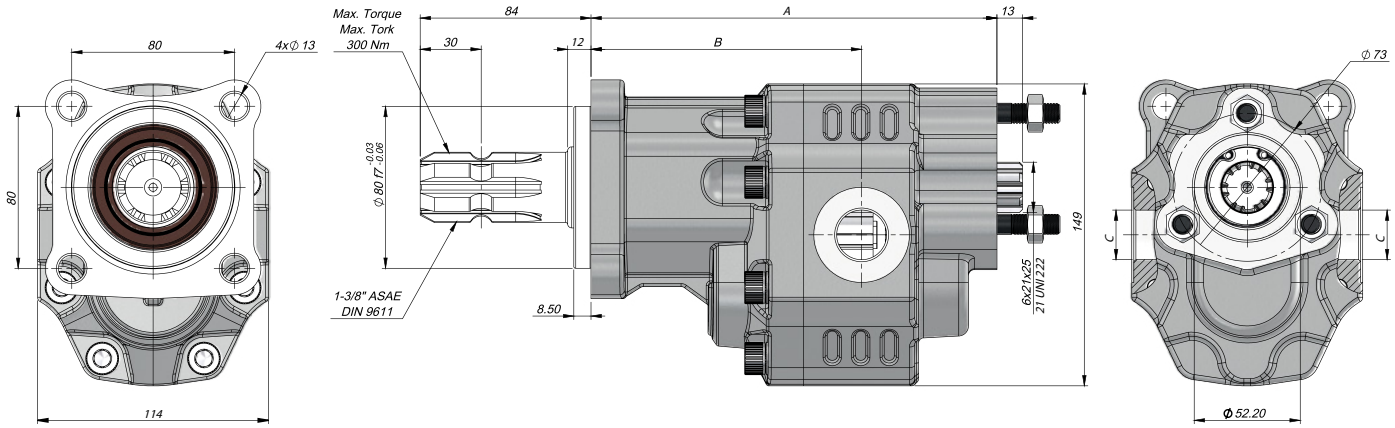

Code			Displacement	Max.Continuous Pressure	Min. Speed	Max.Continuous Speed	A	B	Inlet	Outlet
Left	Right	Bi-Rotational	(cm³/rev)	(%100) (BAR)	(RPM)	(RPM)	(mm)	(mm)	C	D
33201712TAN	33201711TAN	3017AS231	17	300	300	2600	182,5	123,5	G 1/2"	G 1/2"
33202712TAN	33202711TAN	3027AS231	27	290			188,5	126,5		
33203412TAN	33203411TAN	3034AS231	34	285		2300	193,5	128,5	G 3/4"	G 3/4"
33203612TAN	33203611TAN	3036AS231	36				195,0	128,5		
33203812TAN	33203811TAN	3038AS231	38				193,5	128,5		
33204312TAN	33204311TAN	3043AS231	43	280		2100	199,5	133,0		
33205112TAN	33205111TAN	3051AS231	51	230			204,5	134,5		
33206112TAN	33206111TAN	3061AS231	61	225		2000	212,5	138,5	G 1"	G 1"
33207312TAN	33207311TAN	3073AS231	73	215		1800	217,5	146,5		
33208212TAN	33208211TAN	3082AS231	82	200		1700	223,5	146,0		
33210012TAN	33210011TAN	3100AS231	100	190		1600	236,5	160,0	G1 1/4"	G1 1/4"
33212512TAN	33212511TAN	3125AS231	125	170			252,5	164,0		

*The values in the table refer to unidirectional pumps. Reversible pump max pressures are 10% lower than those shown in table. For different working conditions please consult our sales department.

35-63 ISO Bi-Directional Gear Pump

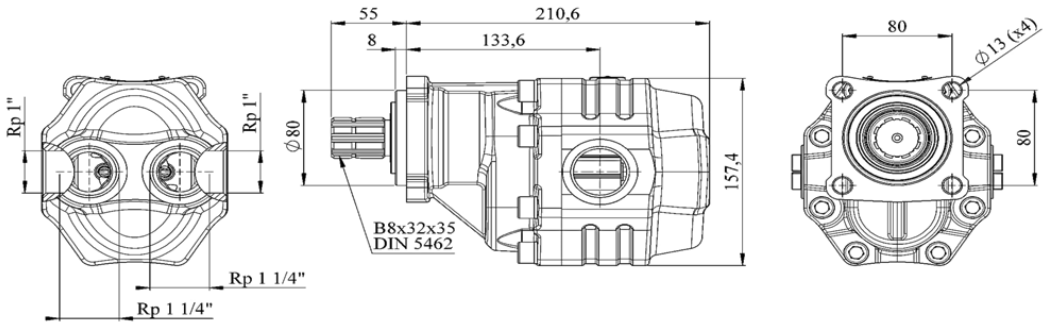

Specifications

Code	Displacement	Rotation	Working Pressure	Max.intermittent pressure	Max.peak pressure	Max. continuous speed	Max.speed at intermit. pressure	Oil temperature range	Operating Viscosity Range	Oil inlet diameter	Oil Outlet diameter	Weight
33506351	63 cc/rev.	bi-rotational	290 bar	315 bar	325 bar	1800 1/min.	2700 1/min.	-20 & 80 °C	12 & 100 cSt	G 1 1/4"	G 1"	17 kg

Torgue - Pressure charesteristics

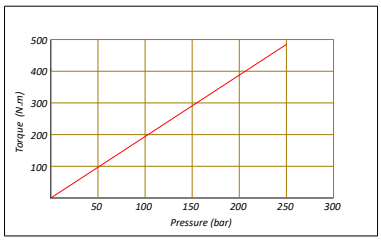

Pressure definition

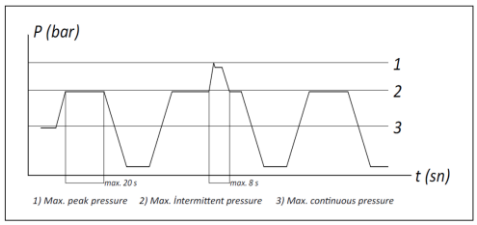

Hydraulic Pump Symbol

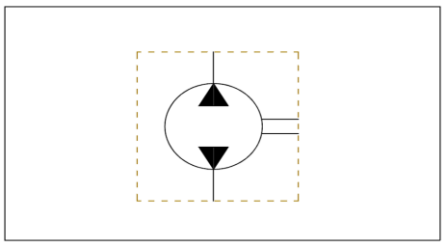

35-75 ISO Bi-Directional Gear Pump

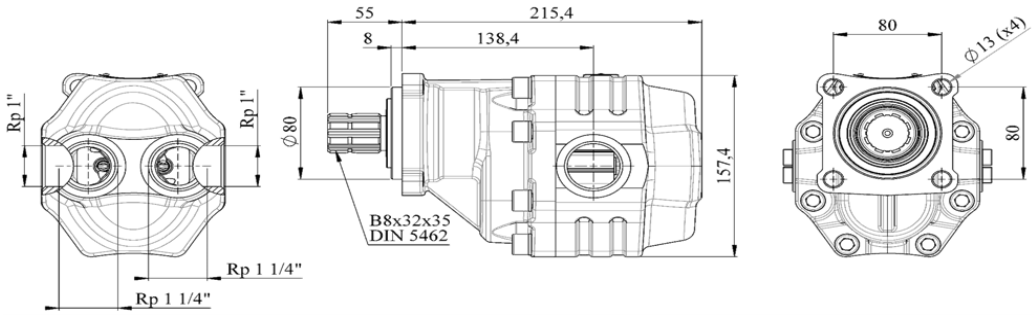

Specifications

Product Code	Displacement	Rotation	Working Pressure	Max.intermittent pressure	Max.peak pressure	Max.continuous speed	Max.speed at intermit. pressure	Oil temperature range	Operating Viscosity Range	Oil inlet diameter	Oil Outlet diameter	Weight
33507551	75 cc/rev.	bi-rotational	280 bar	300 bar	315 bar	1800 1/min.	2700 1/min.	-20 & 80 °C	12 & 100 cSt	G 1 1/4"	G 1"	17,5 kg

Torgue - Pressure charesteristics

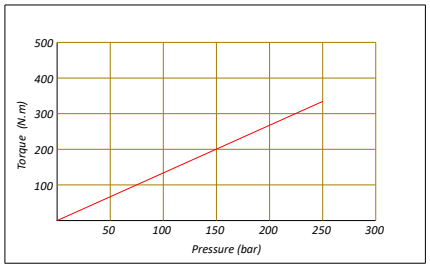

Pressure definition

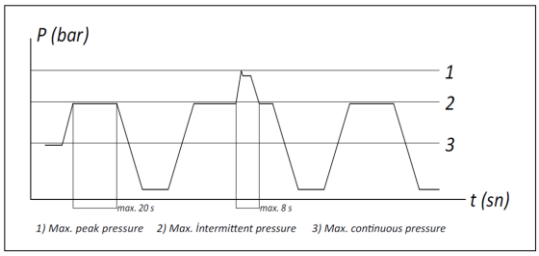

Hydraulic Pump Symbol

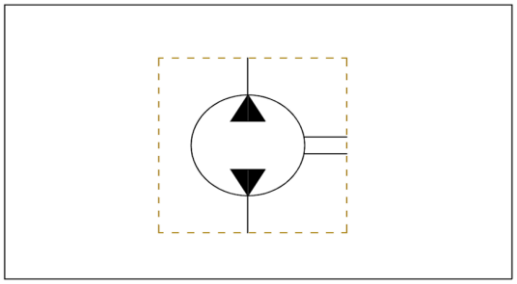

35-82 ISO Bi-Directional Gear Pump

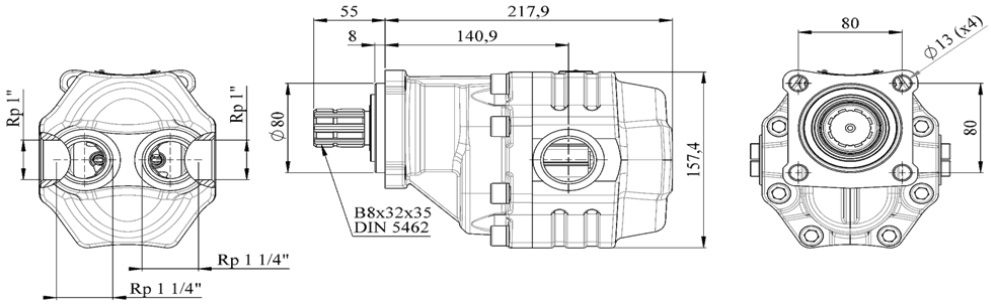

Specifications

Code	Displacement	Rotation	Working Pressure	Max.intermittent Pressure	Max.peak Pressure	Max. Continuous Speed	Max.Speed at Intermit. Pressure	Oil Temperature Range	Operating Viscosity Range	Oil Inlet Diameter	Oil Outlet Diameter	Weight
33508251	82 cc/rev.	bi-rotational	260 bar	280 bar	290 bar	1800 1/min.	2700 1/min.	-20 & 80 °C	12 & 100 cSt	G 1 1/4"	G 1"	18 kg

Torgue - Pressure charesteristics

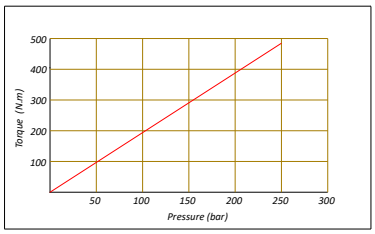

Pressure definition

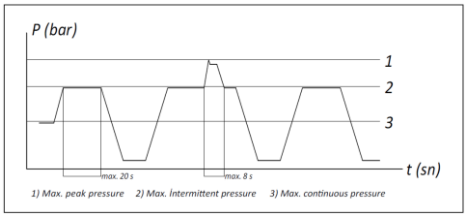

Hydraulic Pump Symbol

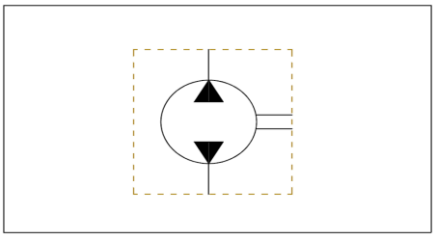

35-90 ISO Bi-Directional Gear Pump

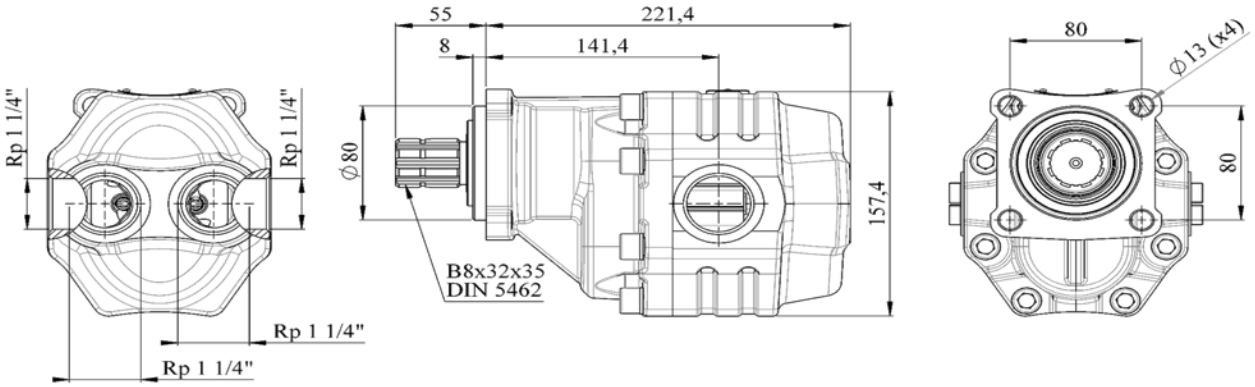

Specifications

Product Code	Displacement	Rotation	Working Pressure	Max.intermittent pressure	Max.peak pressure	Max.continuous speed	Max.speed at intermit. pressure	Oil temperature	Operating Viscosity Range	Oil inlet diameter	Oil Outlet diameter	Weight
33509051	90 cc/rev.	bi-rotational	260 bar	280 bar	290 bar	1800 1/min.	2700 1/min.	-20 & 80 °C	12 & 100 cSt	G 1 1/4"	G 1 1/4"	18,5 kg

Torgue - Pressure charesteristics

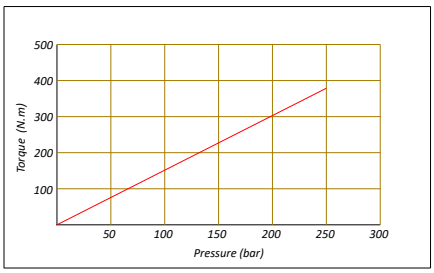

Pressure definition

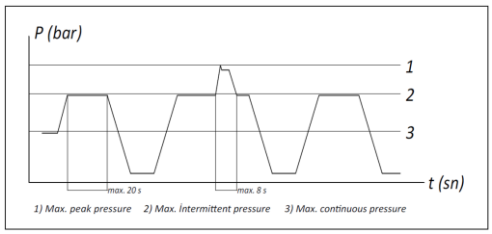

Hydraulic Pump Symbol

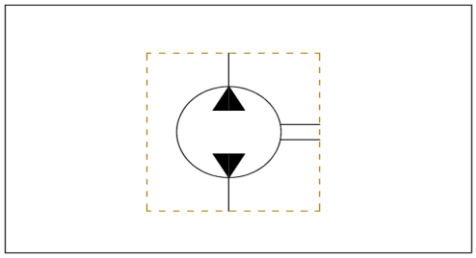

35-100 ISO Bi-Directional Gear Pump

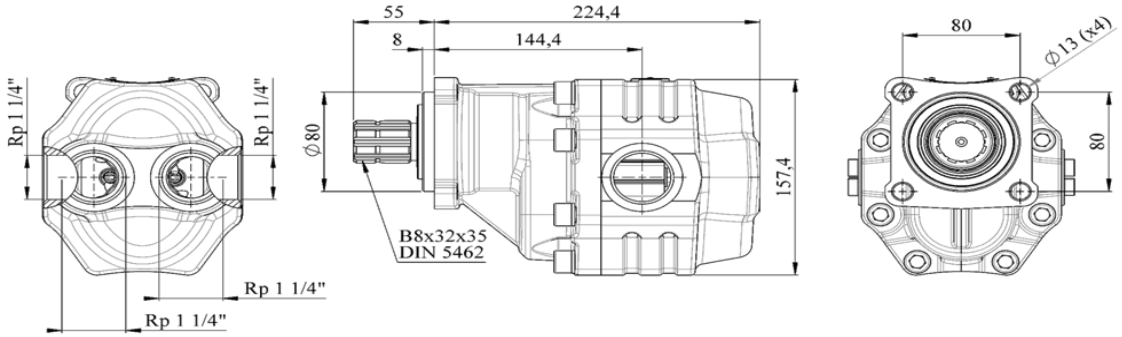

Specifications

Code	Displacement	Rotation	Working Pressure	Max.intermittent pressure	Max.peak pressure	Max.continuos speed	Max.speed at intermit. pressure	Oil temperature range	Operating Viscosity Range	Oil inlet diameter	Oil Outlet diameter	Weight
33510051	100 cc/rev.	bi-rotational	250 bar	270 bar	280 bar	1800 1/min.	2700 1/min.	-20 & 80 °C	12 & 100 cSt	G 1 1/4"	G 1 1/4"	19 kg

Torgue - Pressure charesteristics

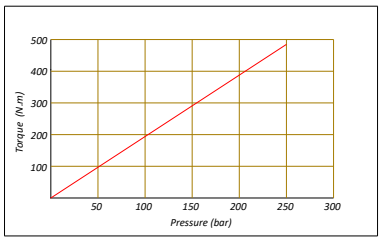

Pressure definition

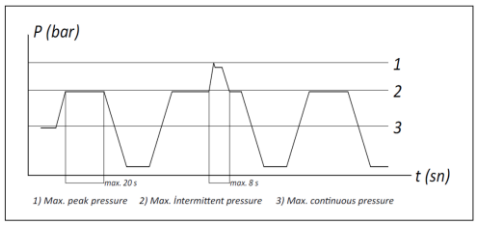

Hydraulic Pump Symbol

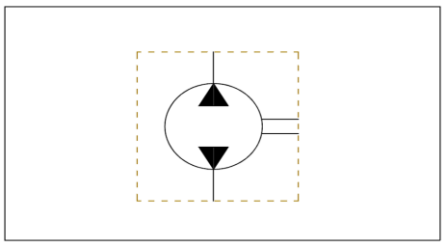

35-110 ISO Bi-Directional Gear Pump

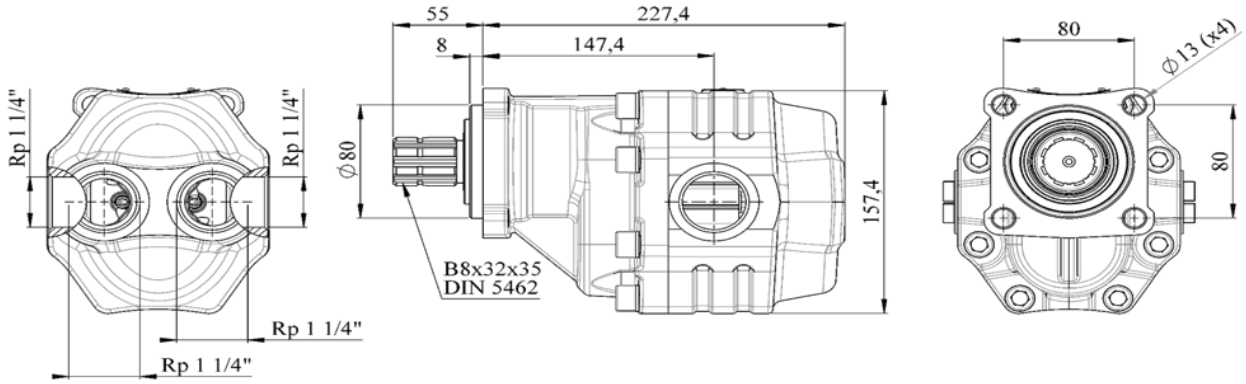

Specifications

Product Code	Displacement	Rotation	Working Pressure	Max.intermittent pressure	Max.peak pressure	Max.continuous speed	Max.speed at intermit. pressure	Oil temperature range	Operating Viscosity Range	Oil inlet diameter	Oil Outlet diameter	Weight
33511051	110 cc/rev.	bi-rotational	240 bar	260 bar	270 bar	1500 1/min.	2700 1/min.	-20 & 80 °C	12 & 100 cSt	G 1 1/4"	G 1 1/4"	19,5 kg

Torgue - Pressure charesteristics

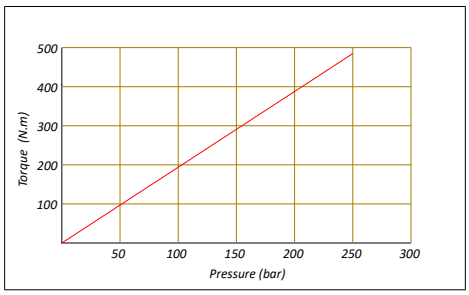

Pressure definition

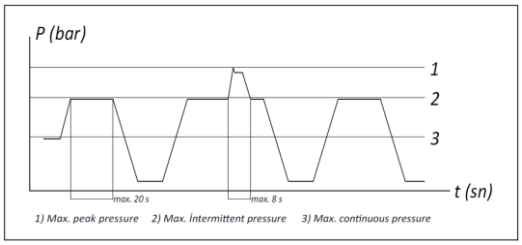

Hydraulic Pump Symbol

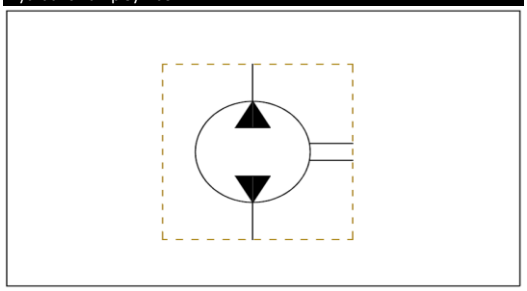

35 SINGLE ROTATIONAL ISO

35 TEK DÖNÜŞLÜ ISO

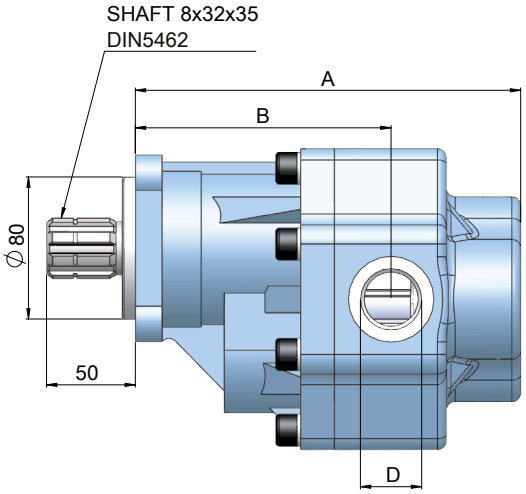

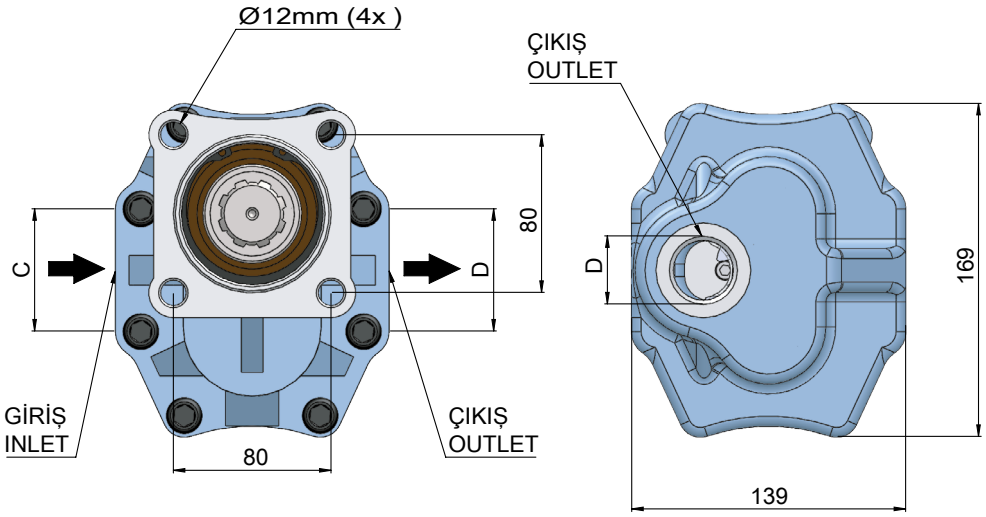

CODE KOD	ROTATION YÖN	DISPLACEMENT DEBİ (Lt/min)	A (mm)	B (mm)	INLET GİRİŞ (C)	OUTLET ÇIKIŞ (D)	Max. Continuous Pressure Max. Sürekli Basınç(Pnom)	Max. Peak Pressure Max. Pik Basınç (Pmax)
33509031	RIGHT/SAĞ	90	211	138,5	R1 1/4"-11	R1"-1	220	250
33509032	LEFT/SOL							
33511031	RIGHT/SAĞ	110	219	146,5	R1 1/4"-11	R1"-1	210	240
33511032	LEFT/SOL							

35 PF SERIES BI-ROTATIONAL ISO

35 PF SERİSİ ÇİFT DÖNÜŞLÜ ISO

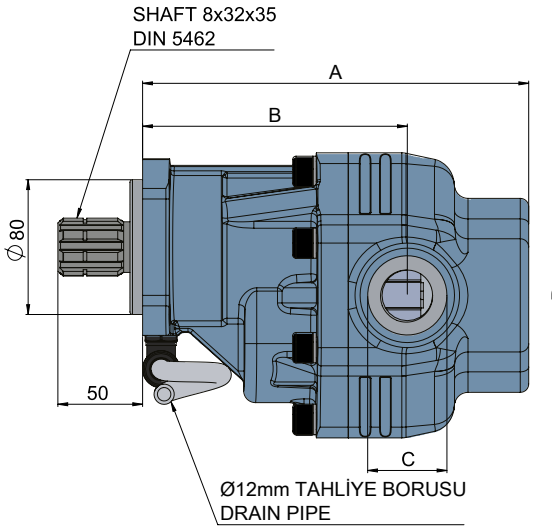

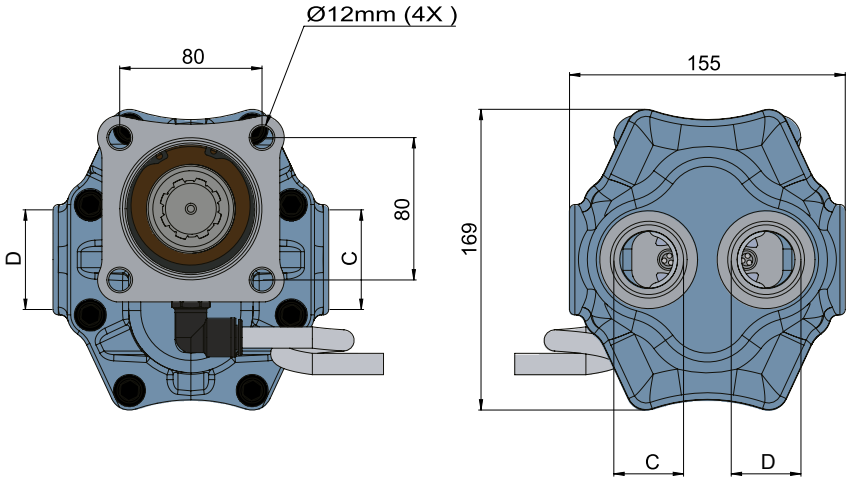

CODE KOD	ROTATION YÖN	DISPLACEMENT DEBİ (Lt/min)	A (mm)	B (mm)	INLET GİRİŞ (C)	OUTLET ÇIKIŞ (D)	Max. Continuous Pressure Max. Sürekli Basınç(Pnom)	Max. Peak Pressure Max. Pik Basınç (Pmax)
PF33509051	BI-ROTATIONAL-ÇİFT	90	223	155	R1 1/4"-11	R1 1/4"-11	210	250
PF33511051	BI-ROTATIONAL-ÇİFT	110	231	163			200	240

35 PF SERIES SINGLE ROTATIONAL ISO

35 PF SERİSİ TEK DÖNÜŞLÜ ISO

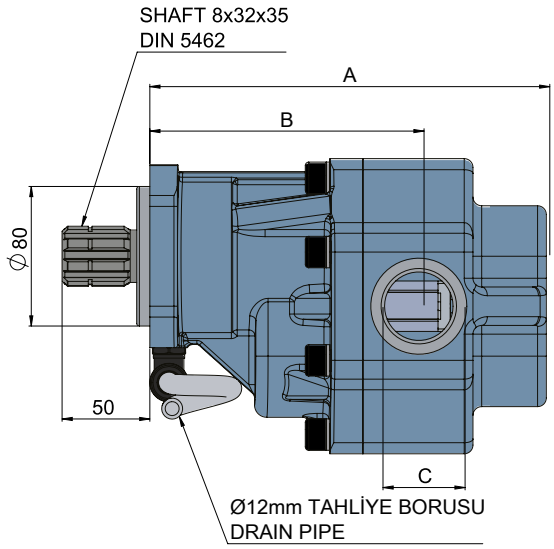

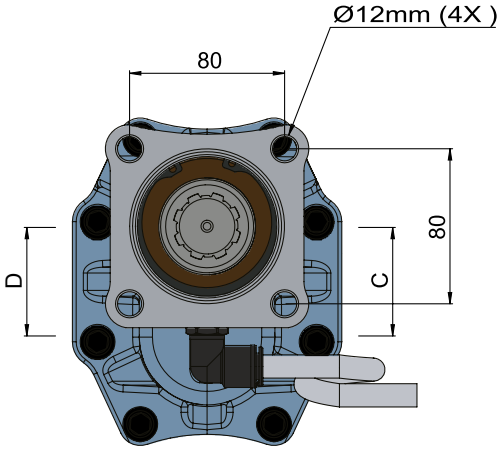

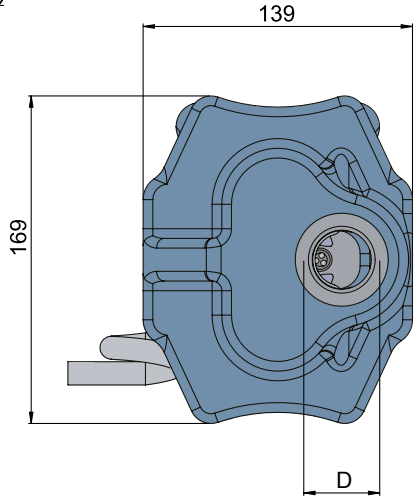

CODE KOD	ROTATION YÖN	DISPLACEMENT DEBİ (Lt/min)	A (mm)	B (mm)	INLET GİRİŞ (C)	OUTLET ÇIKIŞ (D)	Max. Continuous Pressure Max. Sürekli Basınç(Pnom)	Max. Peak Pressure Max. Pik Basınç (Pmax)
PF33509031	RIGHT/SAĞ	90	225	152,5	R1 1/4"-11	R1"-1	220	250
PF33509032	LEFT/SOL							
PF33511031	RIGHT/SAĞ	110	233	160,5	R1 1/4"-11	R1"-1	210	240
PF33511032	LEFT/SOL							

GEMMA HIDROLIK LIMITED SIRKETI
Address : Büyükkayacık OSB. Mh. 413 Nolu Sk. No:9 Selçuklu / KONYA / TURKIYE
Wire : +90 332 236 01 80
Fax : +90 332 236 01 83
Web : www.gemmaautomotive.com
e-mail : info@gemmaautomotive.com

ISO PF SERIES POINTS TO BE CONSIDERED DURING INSTALLATION

1- The elements that must be used in the pump are defined below.

12x8 mm 50 cm
Transparent Drain Hose

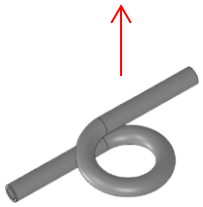

1/4 Elbow Ø12
Air Fitting

Picture -1

2- Transparent hose and pneumatic fitting are assembled as shown in picture -2. If the pump is not used with the specified elements, our company will not be responsible for the failure of the pump and the vehicle.

Picture -2

3- When assembling, the transparent hose should not be in contact with places such as (PTO, Pump, Main Transmission, Exhaust, etc.) in order not to be affected by temperature.

4- As seen in Figure-3, there are two oil seals in ISO Pumps. One of them is responsible for holding the oil coming from the main gearbox and the other one from the pump. In PF Series pumps, the distance between the two seals is more than other pumps and it notifies possible leaks more quickly. Another benefit is that it ensures that the two oils do not mix.

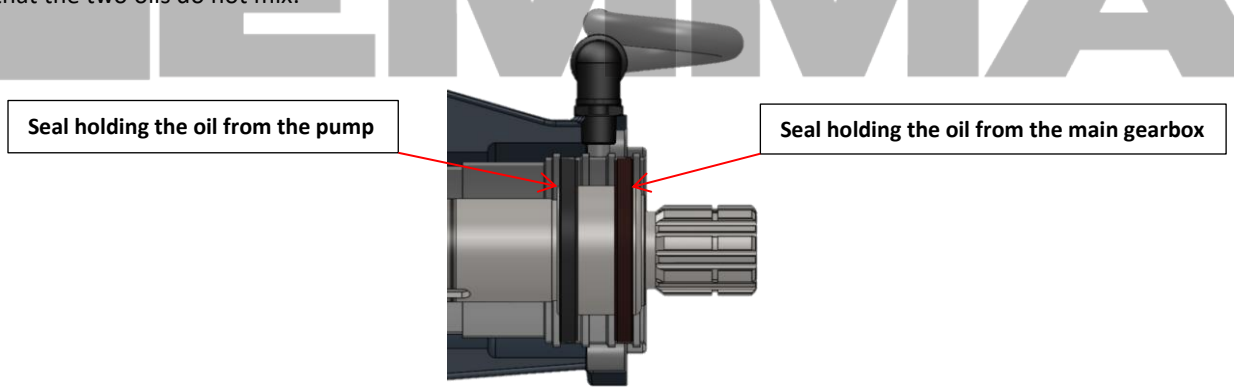

Picture -3

5- Every working day, the pump should be checked with the help of a hose. If there is oil in the hose, contact the nearest service center. If there is dirt or soil blocking the hose, it is cleaned and checked.

6- Oil coming from the drain hose is a harbinger of a malfunction. If the hose is folded, oil leakage cannot be observed and may cause a bigger malfunction. Correct and incorrect installation of the air discharge hose is shown in picture-4.

Picture -4

ADVANTAGES OF PF SERIES IN HYDRAULIC PUMPS

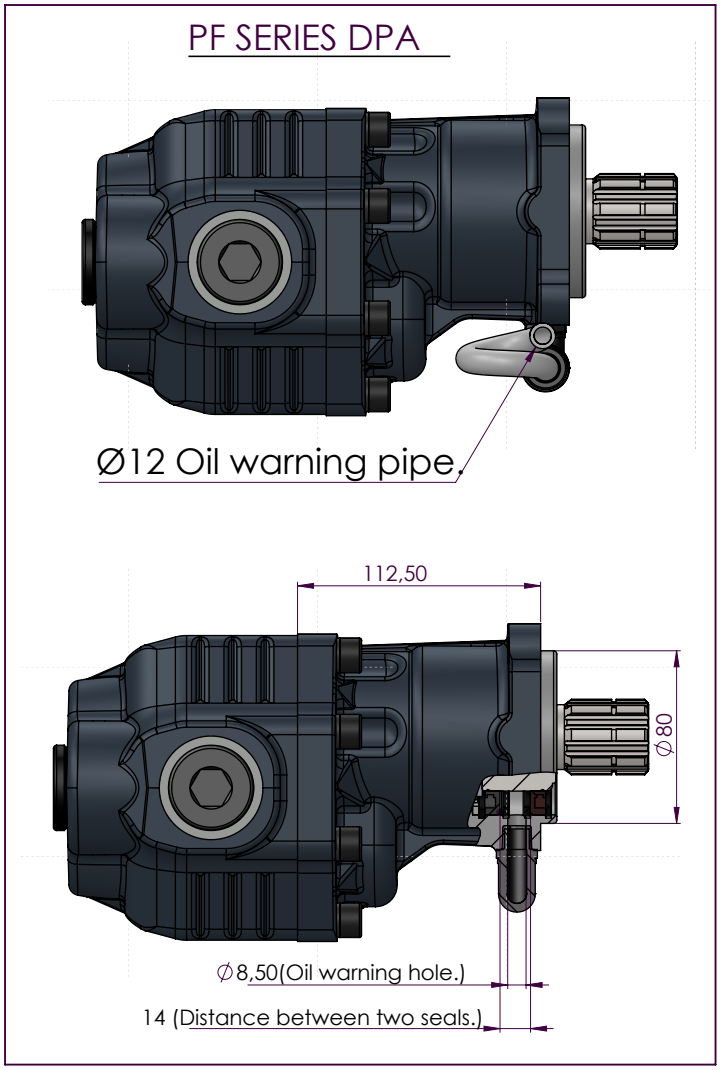

Figure 1.

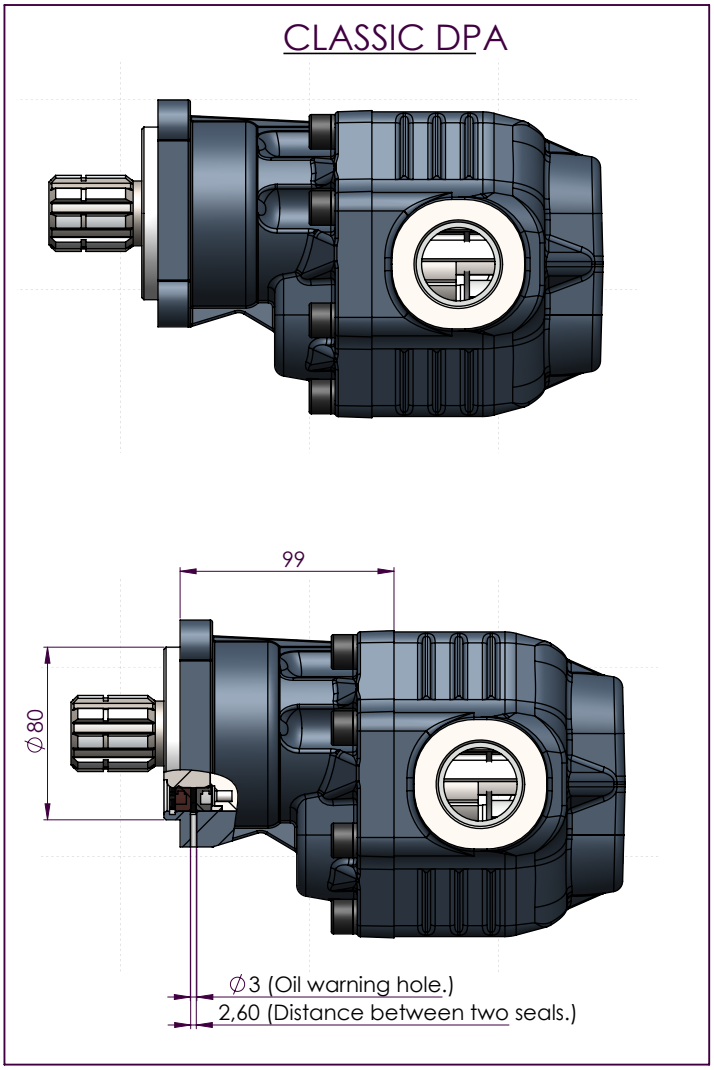

Figure 2.

1) PF series pumps, the distance between the two seals is wider than the classical DPA pumps, allowing the seal leakage that occurs over time to be recognised more quickly thanks to the transparent hose.
You can see the difference between the distance between the seals and the oil warning holes in Figure 1 and Figure 2.

2) Since the oil warning hole (Figure 2.) is Ø3mm in classical DPA pumps, oil leaks become invisible as dust, mud etc. factors will cover the hole more easily. Such a situation has been prevented by designing PF series.

3) PF series covers are in ISO standard dimensions like classic DPA covers and there is no problem in installation.

63 cc UNI Bi-Directional Gear Pump

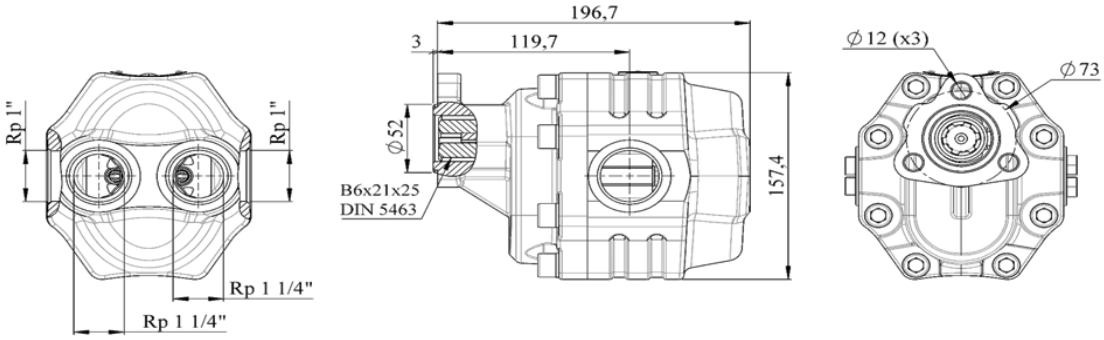

Specifications

Product Code	Displacement	Rotation	Working Pressure	Max.intermittent pressure	Max.peak pressure	Max.continuous speed	Max.speed at intermit. pressure	Oil temperature range	Operating Viscosity Range	Oil inlet diameter	Oil Outlet diameter	Weight
33506341	63 cc/rev.	bi-rotational	290 bar	315 bar	325 bar	1800 1/min.	2700 1/min.	-20 & 80 °C	12 & 100 cSt	G 1 1/4"	G 1"	15,0 kg

Torgue - Pressure charesteristics

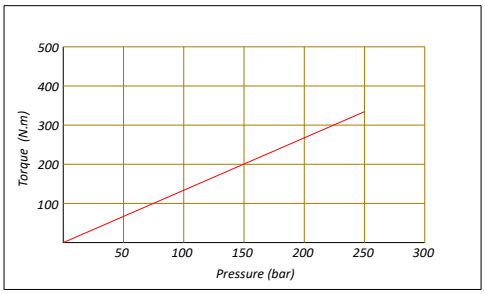

Pressure definition

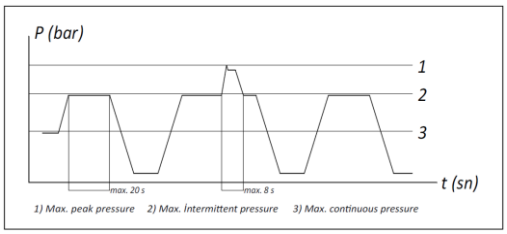

Hydraulic Pump Symbol

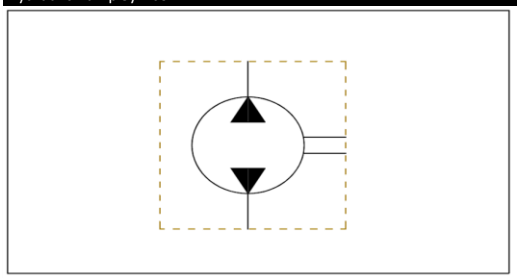

75 cc UNI Bi-Directional Gear Pump

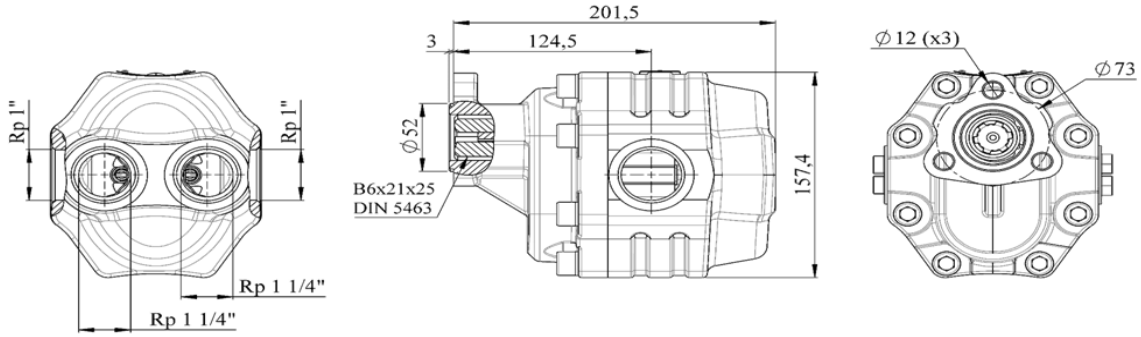

Specifications

Product Code	Displacement	Rotation	Working Pressure	Max.intermittent pressure	Max.peak pressure	Max.continuous speed	Max.speed at intermit. pressure	Oil temperature range	Operating Viscosity Range	Oil inlet diameter	Oil Outlet diameter	Weight
33507541	75 cc/rev.	bi-rotational	280 bar	300 bar	315 bar	1800 1/min.	2700 1/min.	-20 & 80 °C	12 & 100 cSt	G 1 1/4"	G 1"	15,5 kg

Torgue - Pressure charesteristics

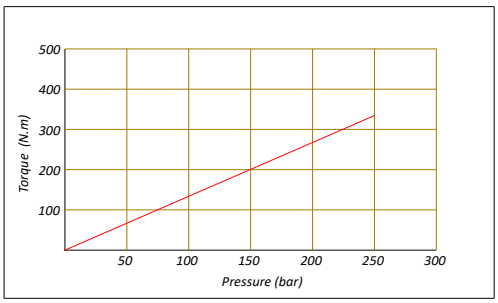

Pressure definition

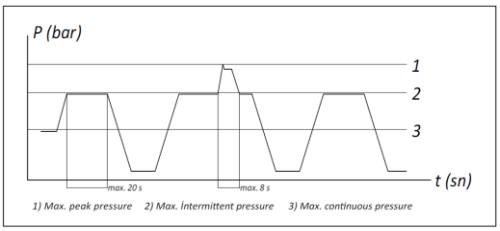

Hydraulic Pump Symbol

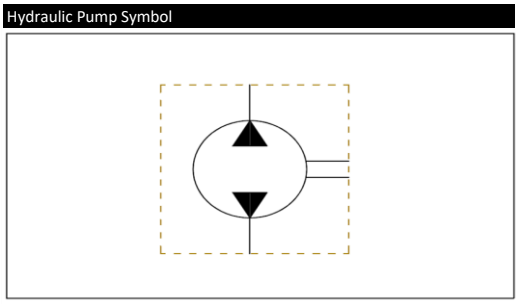

82 cc UNI Bi-Directional Gear Pump

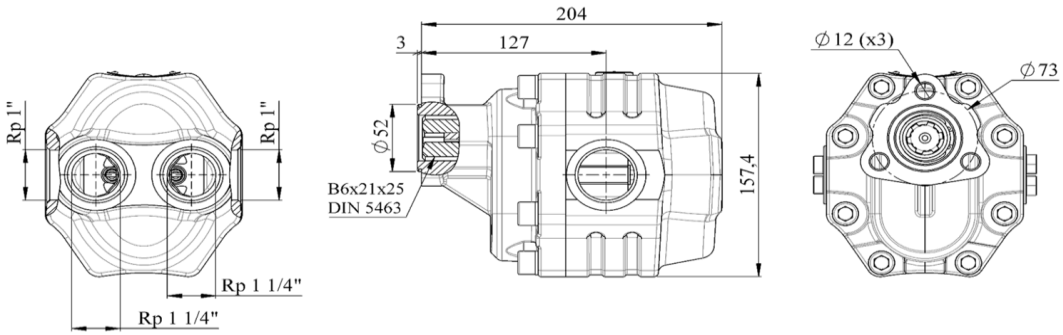

Specifications

Product Code	Displacement	Rotation	Working Pressure	Max.intermittent pressure	Max.peak pressure	Max.continuous speed	Max.speed at intermit. pressure	Oil temperature range	Operating Viscosity Range	Oil inlet diameter	Oil Outlet diameter	Weight
33508241	82 cc/rev.	bi-rotational	260 bar	280 bar	290 bar	1800 1/min.	2700 1/min.	-20 & 80 °C	12 & 100 cSt	G 1 1/4"	G 1"	16, kg

Torgue - Pressure charesteristics

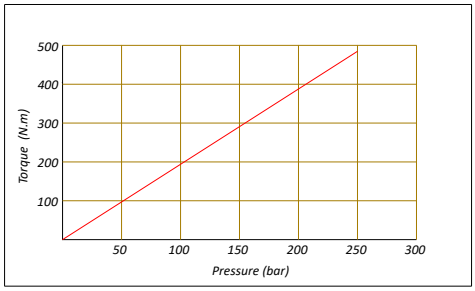

Pressure definition

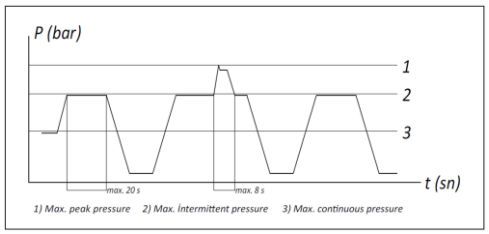

Hydraulic Pump Symbol

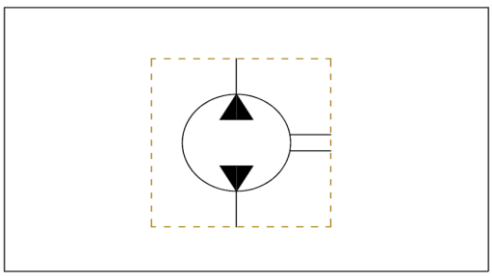

90 cc UNI Bi-Directional Gear Pump

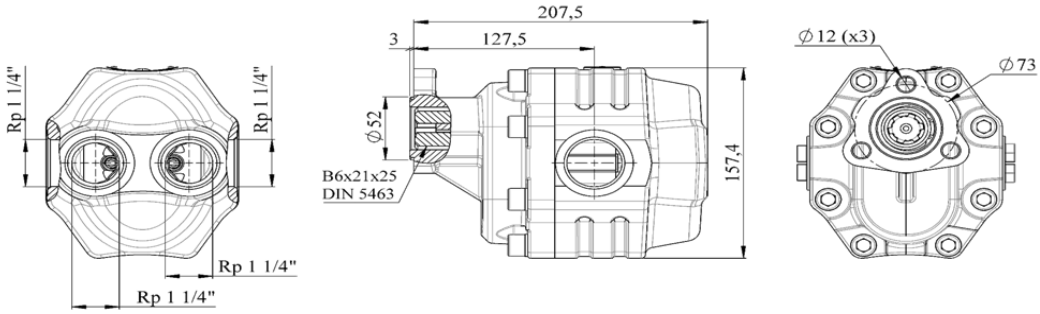

Specifications

Product Code	Displacement	Rotation	Working Pressure	Max.intermittent pressure	Max.peak pressure	Max.continuous speed	Max.speed at intermit. pressure	Oil temperature range	Operating Viscosity Range	Oil inlet diameter	Oil Outlet diameter	Weight
33509041	90 cc/rev.	bi-rotational	260 bar	280 bar	290 bar	1800 1/min.	2700 1/min.	-20 & 80 °C	12 & 100 cSt	G 1 1/4"	G 1 1/4"	16,5 kg

Torgue - Pressure charesteristics

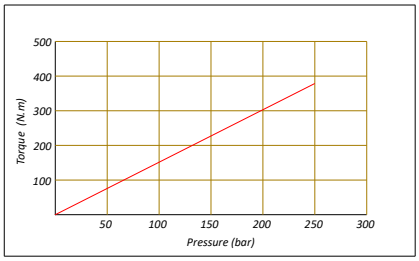

Pressure definition

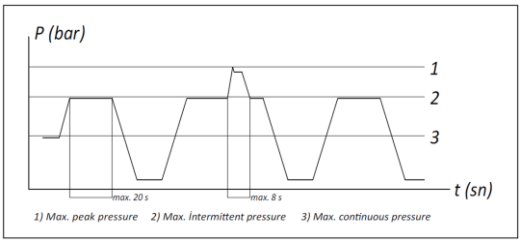

Hydraulic Pump Symbol

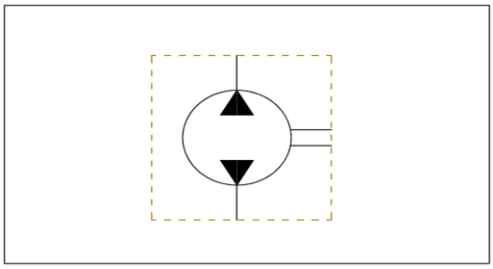

100 cc UNI Bi-Directional Gear Pump

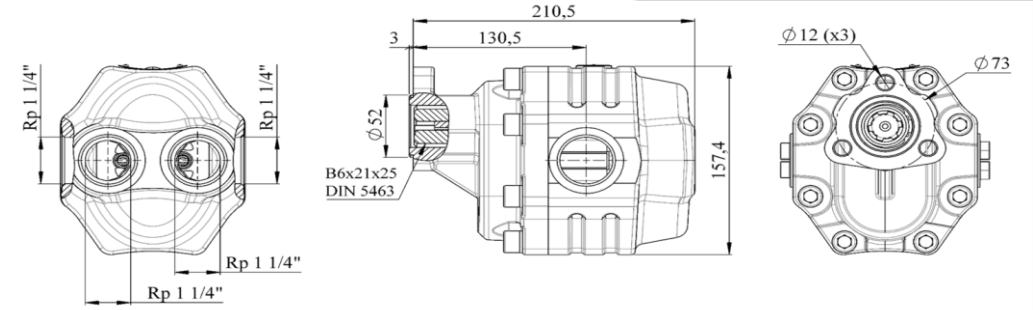

Specifications

Product Code	Displacement	Rotation	Working Pressure	Max.intermittent pressure	Max.peak pressure	Max.continuous speed	Max.speed at intermit. pressure	Oil temperature range	Operating Viscosity Range	Oil inlet diameter	Oil Outlet diameter	Weight
33510041	100 cc/rev.	bi-rotational	250 bar	270 bar	280 bar	1800 1/min.	2700 1/min.	-20 & 80 °C	12 & 100 cSt	G 1 1/4"	G 1 1/4"	17, kg

Torgue - Pressure charesteristics

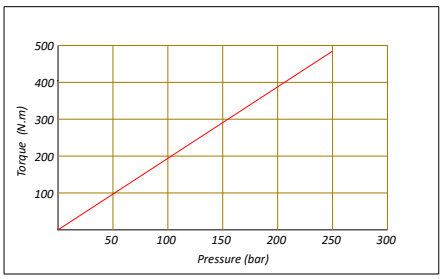

Pressure definition

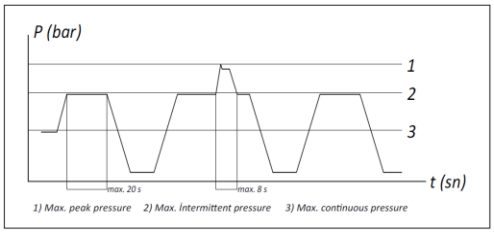

Hydraulic Pump Symbol

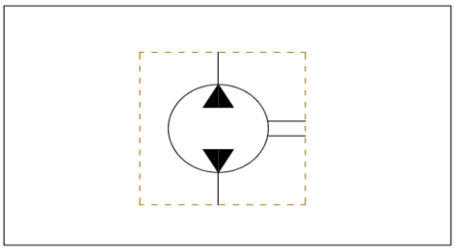

110 cc UNI Bi-Directional Gear Pump

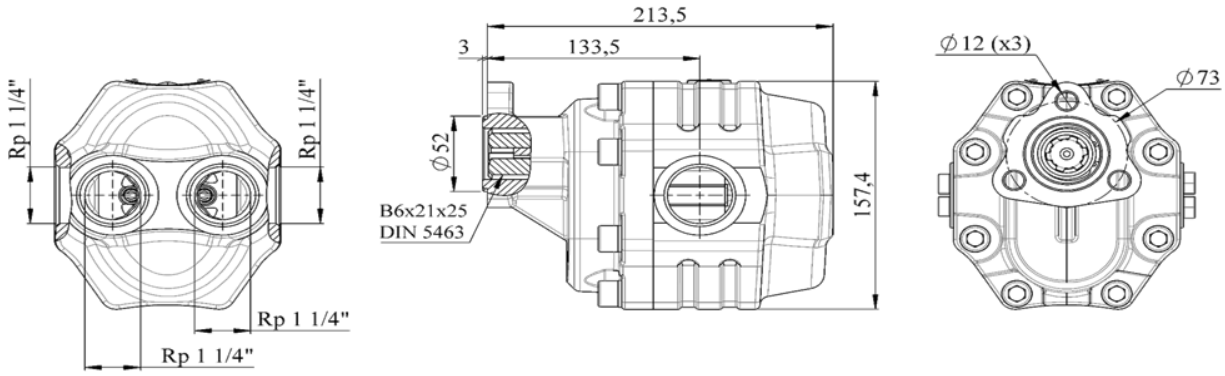

Specifications

Product Code	Displacement	Rotation	Working Pressure	Max. intermittent	Max.peak pressure	Max. continuous speed	Max.speed at intermit. pressure	Oil temperature range	Operating Viscosity Range	Oil inlet diameter	Oil Outlet diameter	Weight
33511041	110 cc/rev.	bi-rotational	240 bar	260 bar	270 bar	1500 1/min.	2700 1/min.	-20 & 80 °C	12 & 100 cSt	G 1 1/4"	G 1 1/4"	17,5 kg

Torgue - Pressure charesteristics

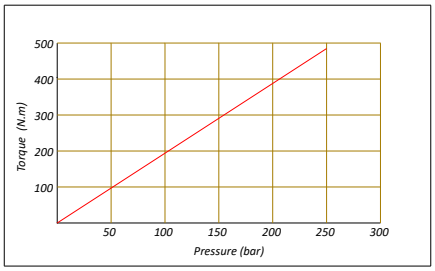

Pressure definition

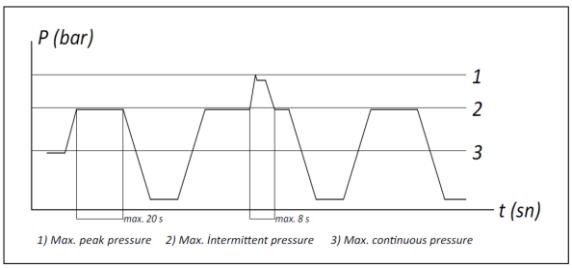

Hydraulic Pump Symbol

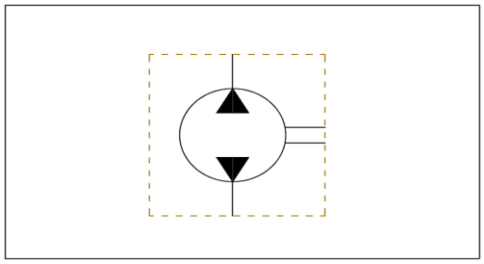

35 SINGLE ROTATIONAL UNI

35 TEK DÖNÜŞLÜ UNI

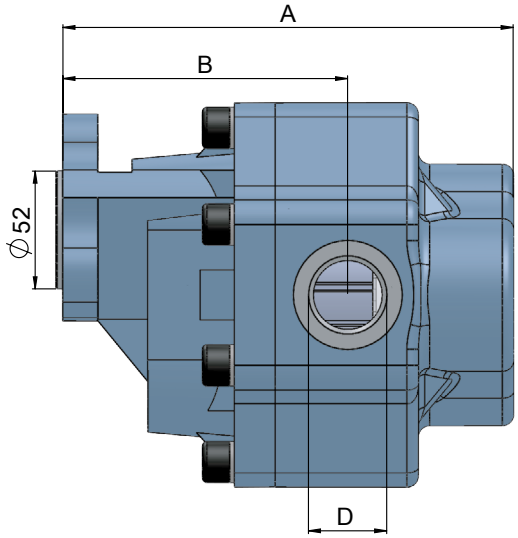

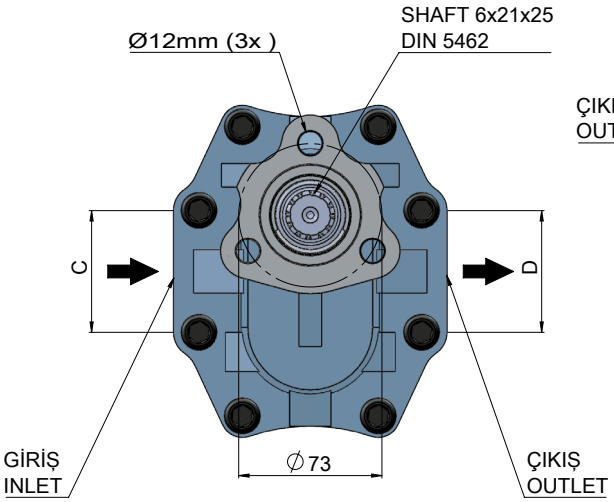

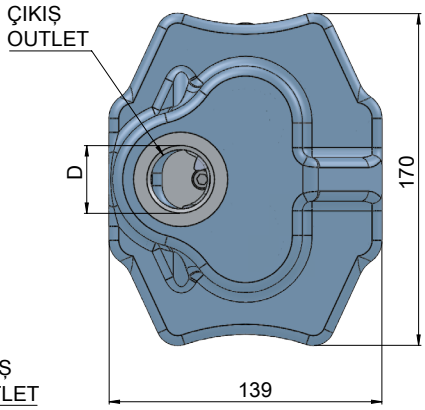

CODE KOD	ROTATION YÖN	DISPLACEMENT DEBİ (Lt/min)	A (mm)	B (mm)	INLET GİRİŞ (C)	OUTLET ÇIKIŞ (D)	Max. Continuous Pressure Max. Sürekli Basınç(Pnom)	Max. Peak Pressure Max. Pik Basınç (Pmax)
33509011	RIGHT/SAĞ	90	191	118,5	R1 1/4"-11	R1"-1	220	250
33509012	LEFT/SOL							
33511011	RIGHT/SAĞ	110	199	126,5	R1 1/4"-11	R1"-1	210	240
33511012	LEFT/SOL							

40 BI-ROTATIONAL ISO

40 ÇİFT DÖNÜŞLÜ ISO

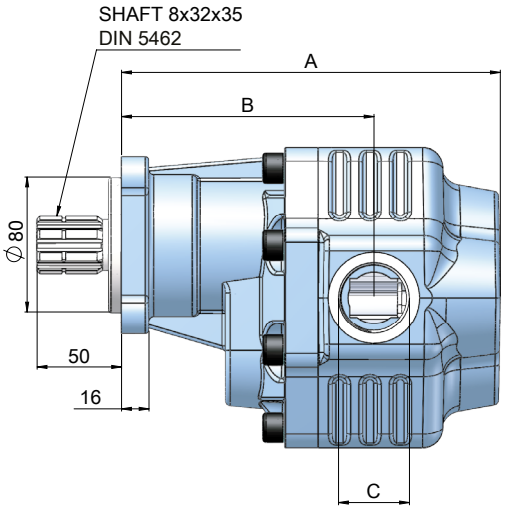

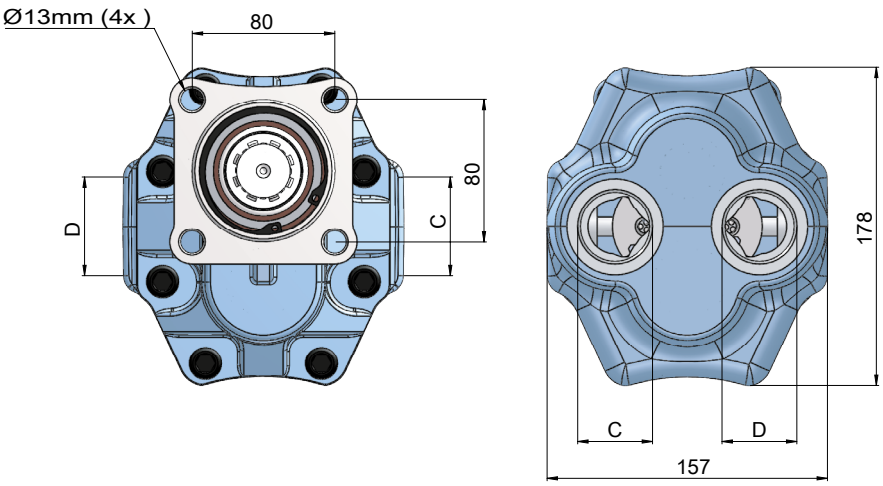

CODE KOD	ROTATION YÖN	DISPLACEMENT DEBİ (Lt/min)	A (mm)	B (mm)	INLET GİRİŞ (C)	OUTLET ÇIKIŞ (D)	Max. Continuous Pressure Max. Sürekli Basınç(Pnom)	Max. Peak Pressure Max. Pik Basınç (Pmax)
34007351	BI-ROTATIONAL-ÇİFT	73	207	140	R1"-11	R1"-11	240	275
34008751	BI-ROTATIONAL-ÇİFT	87	212	144			220	250
34010951	BI-ROTATIONAL-ÇİFT	109	219	145	R1 1/4"-11	R1 1/4"-11	210	240

40 SINGLE ROTATIONAL ISO

40 TEK DÖNÜŞLÜ ISO

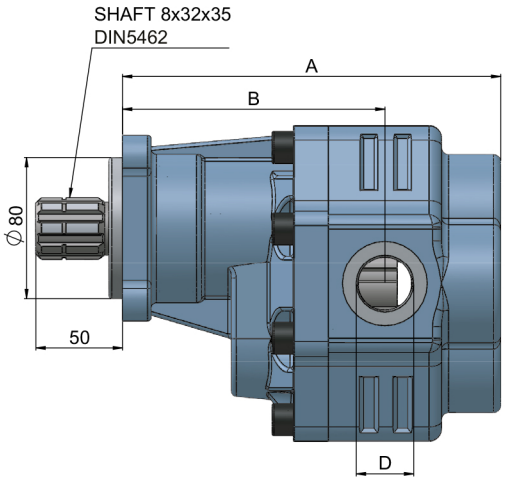

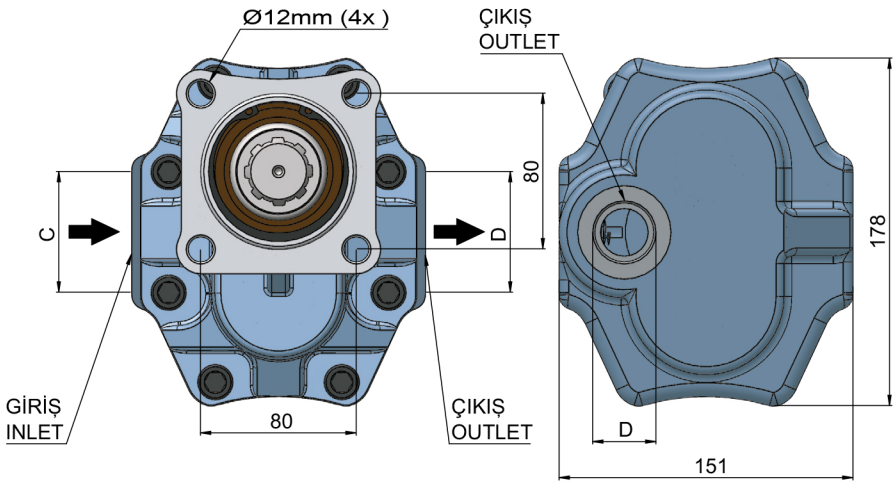

CODE KOD	ROTATION YÖN	DISPLACEMENT DEBİ (Lt/min)	A (mm)	B (mm)	INLET GİRİŞ (C)	OUTLET ÇIKIŞ (D)	Max. Continuous Pressure Max. Sürekli Basınç(Pnom)	Max. Peak Pressure Max. Pik Basınç (Pmax)
34006331	RIGHT/SAĞ	63	202	139	R1"-11	R3/4"-14	250	285
34006332	LEFT/SOL							
34007331	RIGHT/SAĞ	73	207	142	R1 1/4"-11		240	275
34007332	LEFT/SOL							
34008731	RIGHT/SAĞ	87	210	144		R1"-11	220	250
34008732	LEFT/SOL							
34010931	RIGHT/SAĞ	109	218	145			210	240
34010932	LEFT/SOL							
34013331	RIGHT/SAĞ	133	233	145	R1 1/2" -11		200	230
34013332	LEFT/SOL							
34015131	RIGHT/SAĞ	151	241	148			170	210
34015132	LEFT/SOL							

40 PF SERIES BI-ROTATIONAL ISO

40 PF SERİSİ ÇİFT DÖNÜŞLÜ ISO

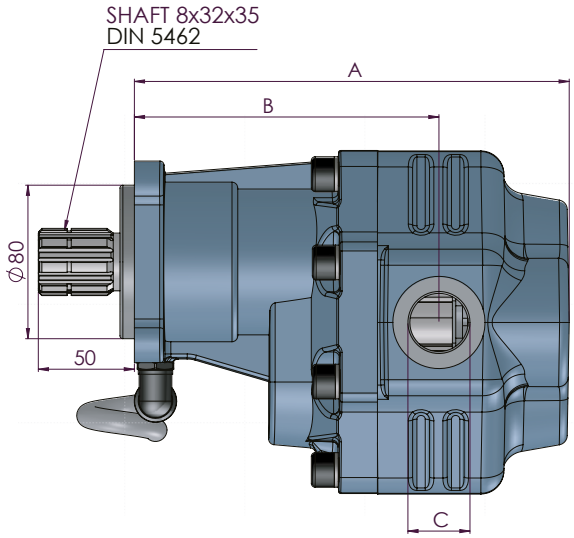

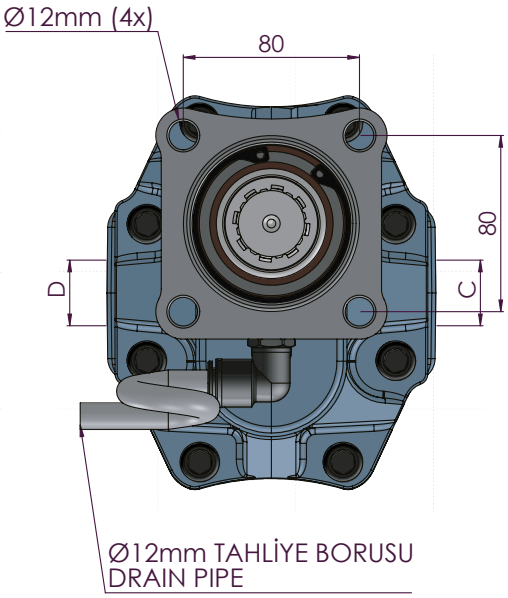

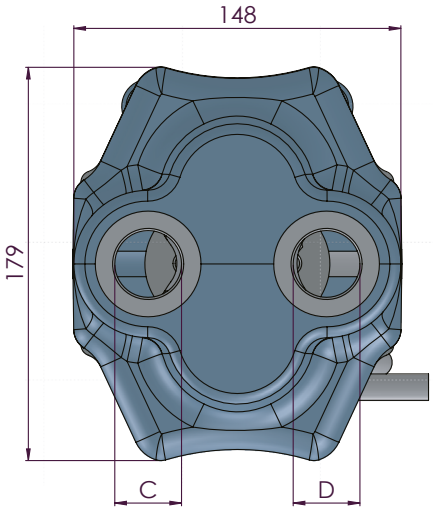

CODE KOD	ROTATION YÖN	DISPLACEMENT DEBİ (Lt/min)	A (mm)	B (mm)	INLET GİRİŞ (C)	OUTLET ÇIKIŞ (D)	Max. Continuous Pressure Max. Sürekli Basınç(Pnom)	Max. Peak Pressure Max. Pik Basınç (Pmax)
PF34007351	BI-ROTATIONAL-ÇİFT	73	221	154	R1"-11	R1"-11	240	275
PF34008751	BI-ROTATIONAL-ÇİFT	87	226	158			220	250
PF34010951	BI-ROTATIONAL-ÇİFT	109	233	159	R1 1/4"-11	R1 1/4"-11	210	240

40 PF SERIES SINGLE ROTATIONAL ISO

40 PF SERİSİ TEK DÖNÜŞLÜ ISO

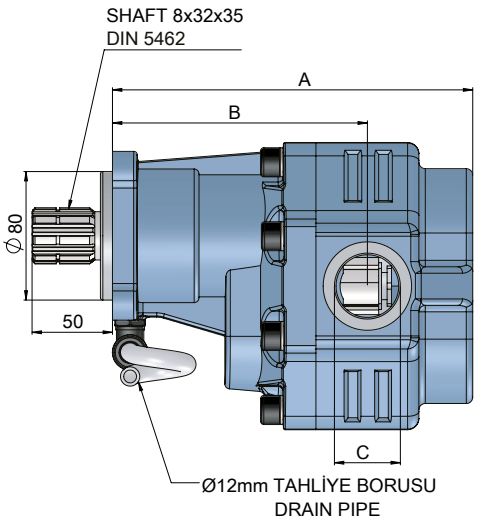

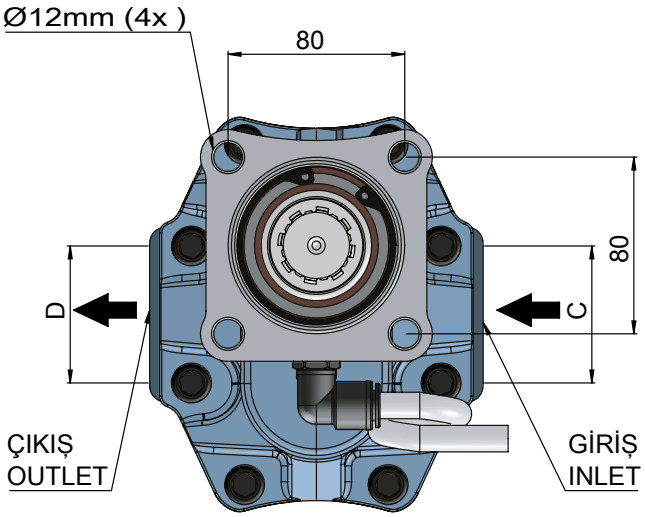

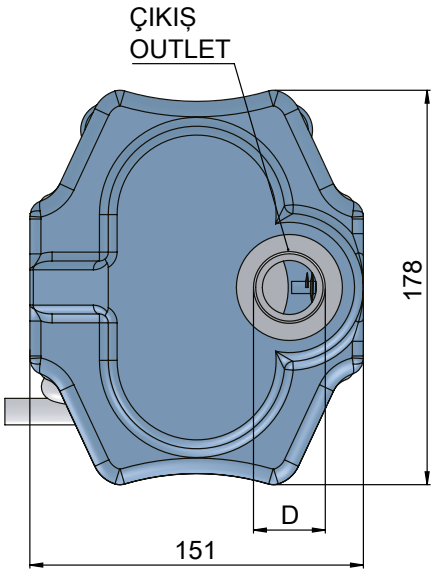

CODE KOD	ROTATION YÖN	DISPLACEMENT DEBİ (Lt/min)	A (mm)	B (mm)	INLET GİRİŞ (C)	OUTLET ÇIKIŞ (D)	Max. Continuous Pressure Max. Sürekli Basınç(Pnom)	Max. Peak Pressure Max. Pik Basınç (Pmax)
PF34006331	RIGHT/SAĞ	63	216	153	R1"-11	R3/4"-14	250	285
PF34006332	LEFT/SOL							
PF34007331	RIGHT/SAĞ	73	221	156	R1 1/4"-11		240	275
PF34007332	LEFT/SOL							
PF34008731	RIGHT/SAĞ	87	224	158		R1"-11	220	250
PF34008732	LEFT/SOL							
PF34010931	RIGHT/SAĞ	109	232	159			210	240
PF34010932	LEFT/SOL							
PF34013331	RIGHT/SAĞ	133	247	159	R1 1/2"-11		200	230
PF34013332	LEFT/SOL							
PF34015131	RIGHT/SAĞ	151	255	162			170	210
PF34015132	LEFT/SOL							

GEMMA HIDROLIK LIMITED SIRKETI
Address : Büyükkayacık OSB. Mh. 413 Nolu Sk. No:9 Selçuklu / KONYA / TURKIYE
Wire : +90 332 236 01 80
Fax : +90 332 236 01 83
Web : www.gemmaautomotive.com
e-mail : info@gemmaautomotive.com

ISO PF SERIES POINTS TO BE CONSIDERED DURING INSTALLATION

1- The elements that must be used in the pump are defined below.

12x8 mm 50 cm
Transparent Drain Hose

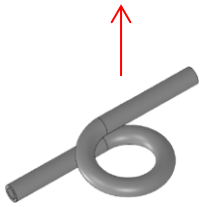

1/4 Elbow Ø12
Air Fitting

Picture -1

2- Transparent hose and pneumatic fitting are assembled as shown in picture -2. If the pump is not used with the specified elements, our company will not be responsible for the failure of the pump and the vehicle.

Picture -2

3- When assembling, the transparent hose should not be in contact with places such as (PTO, Pump, Main Transmission, Exhaust, etc.) in order not to be affected by temperature.

4- As seen in Figure-3, there are two oil seals in ISO Pumps. One of them is responsible for holding the oil coming from the main gearbox and the other one from the pump. In PF Series pumps, the distance between the two seals is more than other pumps and it notifies possible leaks more quickly. Another benefit is that it ensures that the two oils do not mix.

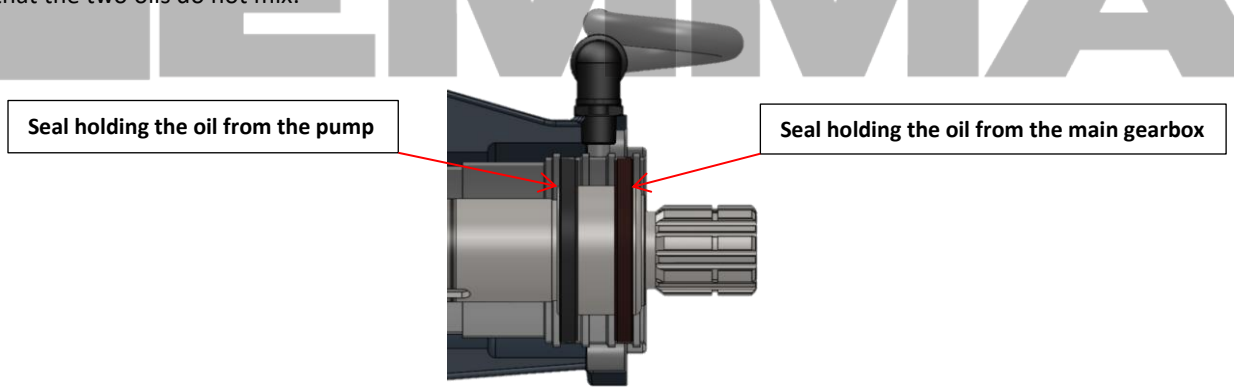

Picture -3

5- Every working day, the pump should be checked with the help of a hose. If there is oil in the hose, contact the nearest service center. If there is dirt or soil blocking the hose, it is cleaned and checked.

6- Oil coming from the drain hose is a harbinger of a malfunction. If the hose is folded, oil leakage cannot be observed and may cause a bigger malfunction. Correct and incorrect installation of the air discharge hose is shown in picture-4.

Picture -4

ADVANTAGES OF PF SERIES IN HYDRAULIC PUMPS

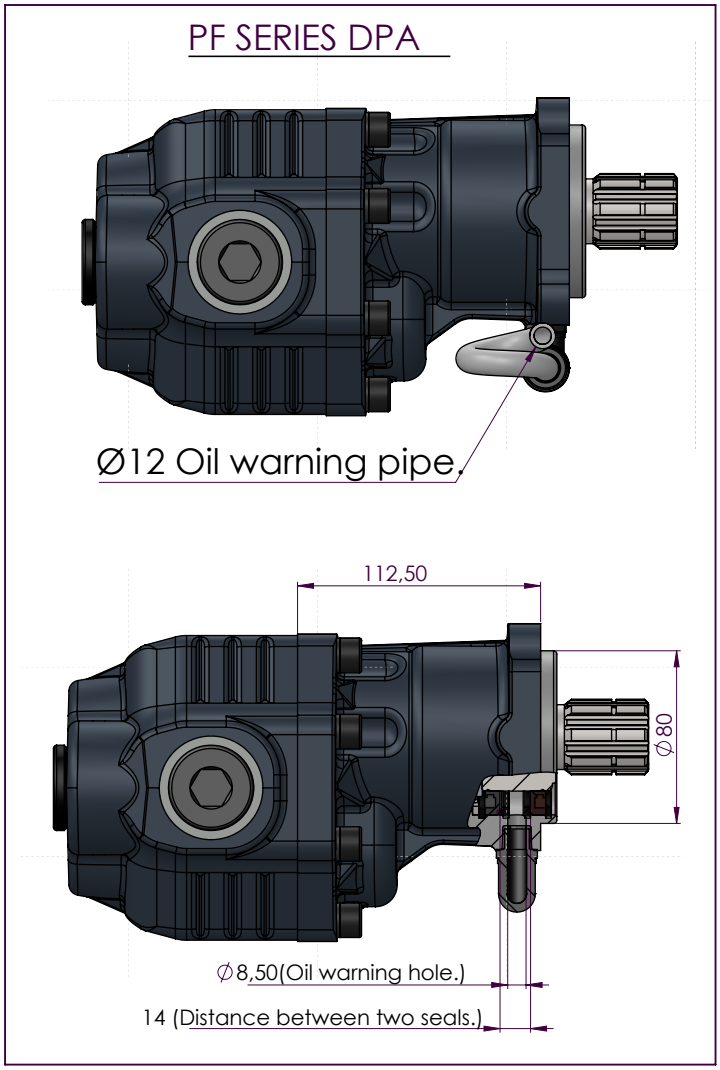

Figure 1.

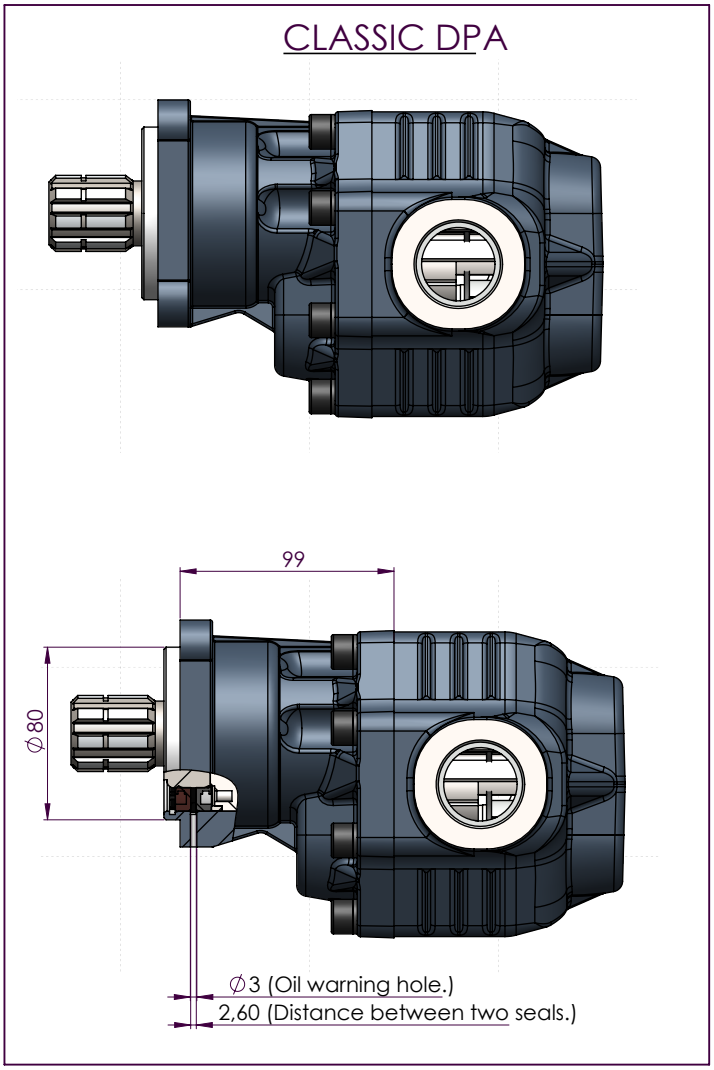

Figure 2.

1) PF series pumps, the distance between the two seals is wider than the classical DPA pumps, allowing the seal leakage that occurs over time to be recognised more quickly thanks to the transparent hose.
You can see the difference between the distance between the seals and the oil warning holes in Figure 1 and Figure 2.

2) Since the oil warning hole (Figure 2.) is Ø3mm in classical DPA pumps, oil leaks become invisible as dust, mud etc. factors will cover the hole more easily. Such a situation has been prevented by designing PF series.

3) PF series covers are in ISO standard dimensions like classic DPA covers and there is no problem in installation.

40 BI-ROTATIONAL UNI

40 ÇİFT DÖNÜŞLÜ UNI

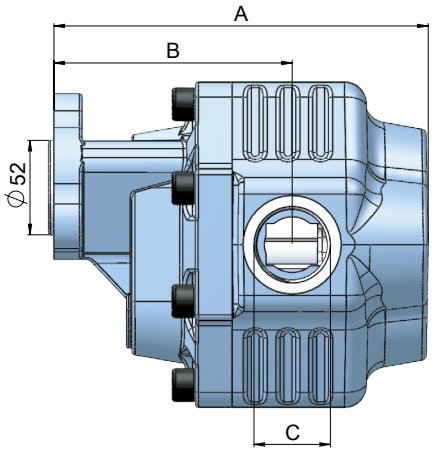

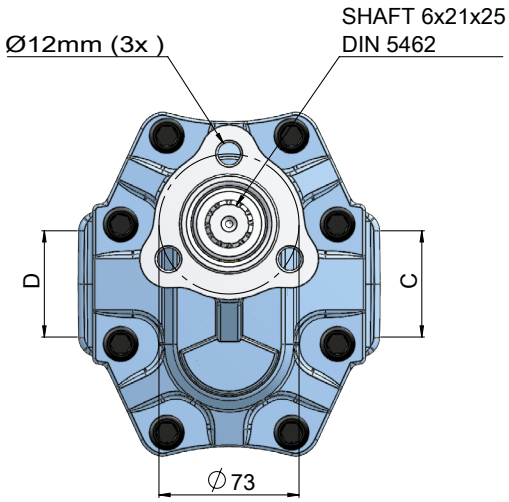

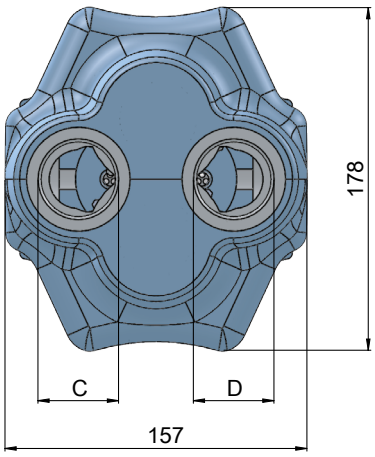

CODE KOD	ROTATION YÖN	DISPLACEMENT DEBİ (Lt/min)	A (mm)	B (mm)	INLET GİRİŞ (C)	OUTLET ÇIKIŞ (D)	Max. Continuous Pressure Max. Sürekli Basınç(Pnom)	Max. Peak Pressure Max. Pik Basınç (Pmax)
34007341	BI-ROTATIONAL-ÇİFT	73	196	129	R1"-11	R1"-11	240	275
34008741	BI-ROTATIONAL-ÇİFT	87	201	133			220	250
34010941	BI-ROTATIONAL-ÇİFT	109	208	134	R1 1/4"-11	R1 1/4"-11	210	240

40 SINGLE ROTATIONAL UNI

40 TEK DÖNÜŞLÜ UNI

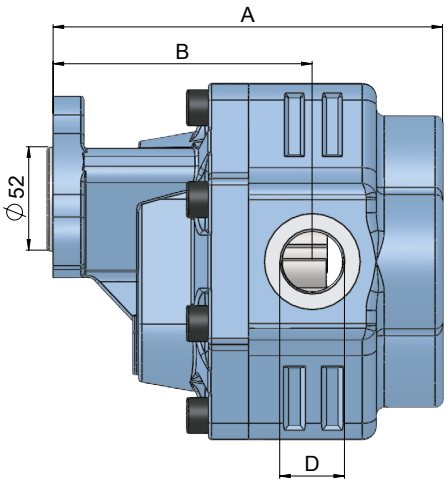

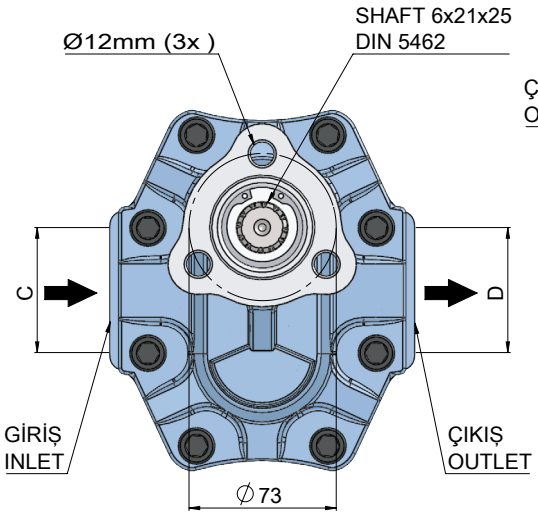

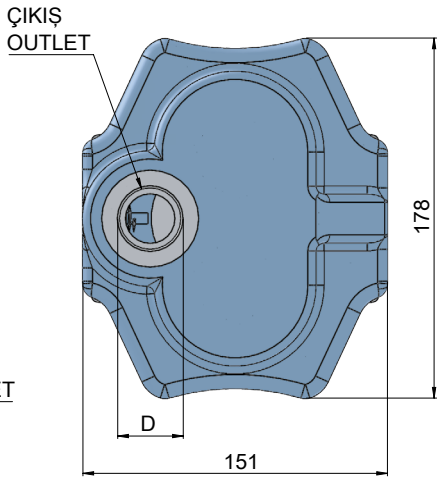

CODE KOD	ROTATION YÖN	DISPLACEMENT DEBİ (Lt/min)	A (mm)	B (mm)	INLET GİRİŞ (C)	OUTLET ÇIKIŞ (D)	Max. Continuous Pressure Max. Sürekli Basınç(Pnom)	Max. Peak Pressure Max. Pik Basınç (Pmax)
34006311	RIGHT/SAĞ	63	191	128	R1"-11	R3/4"-14	250	285
34006312	LEFT/SOL							
34007311	RIGHT/SAĞ	73	196	131	R1 1/4"-11		240	275
34007312	LEFT/SOL							
34008711	RIGHT/SAĞ	87	199	133		R1"-11	220	250
34008712	LEFT/SOL							
34010911	RIGHT/SAĞ	109	207	134			210	240
34010912	LEFT/SOL							
34013311	RIGHT/SAĞ	133	222	134	R1 1/2"-11		200	230
34013312	LEFT/SOL							
34015111	RIGHT/SAĞ	151	230	137			170	210
34015112	LEFT/SOL							

40 DPM MECHANIC VALVES BI-ROTATIONAL

40 DPM MEKANİK VENTİLLİ ÇİFT DÖNÜŞLÜ

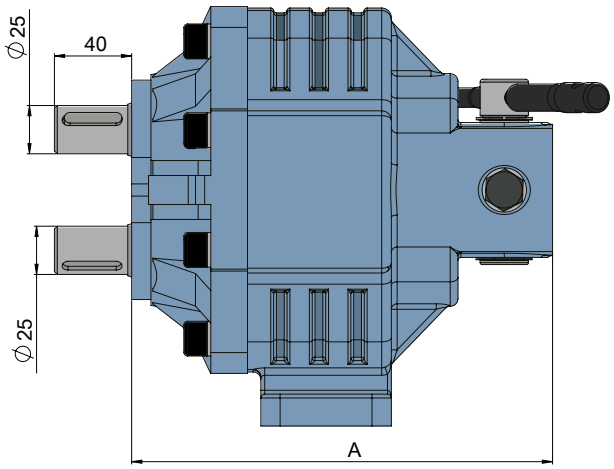

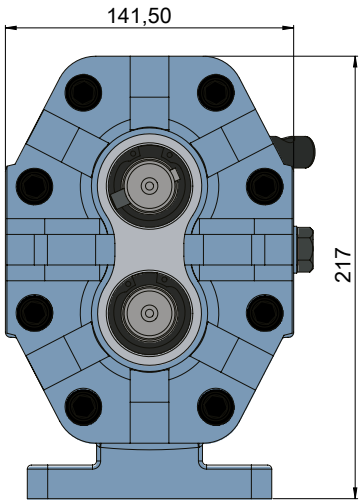

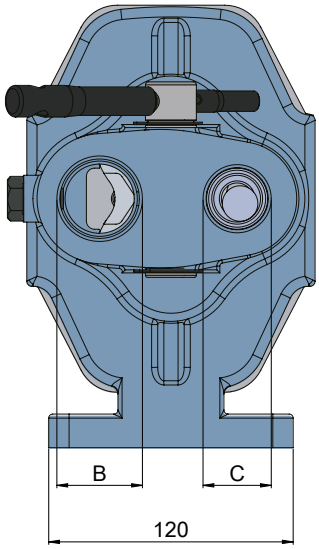

CODE KOD	ROTATION YÖN	DISPLACEMENT DEBİ (Lt/min)	A (mm)	INLET GİRİŞ (B)	OUTLET ÇIKIŞ (C)	Max. Continuous Pressure Max. Sürekli Basınç(Pnom)	Max. Peak Pressure Max. Pik Basınç (Pmax)
34010971	BI-ROTATIONAL-ÇİFT	109	218	R1 1/4"-11	R1"-11	210	240

40 SERIE GEAR PUMP TANDEM UNI

40 SERİ TANDEM UNI DİŞLİ POMPALAR

Inlet Pressure	0.3÷ 2 bar
Operating Viscosity	-12:100 cSt
Fluid Temperature	-40 ºC+145 ºC

Working Pressure	Contamination NAS 1638	Contamination ISO 4406	Filtre βx=75
≥200 bar	11	20/17	25 µm
≤200 bar	12	21/18	40 µm

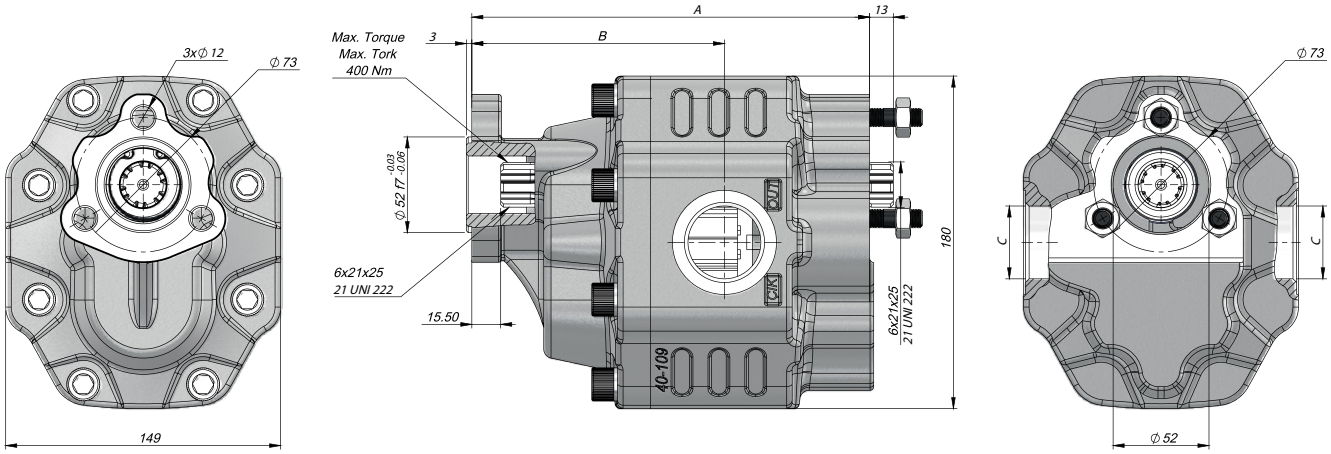

Code			Displacement	Max.Continuous Pressure	Min. Speed	Max.Continuous Speed	A	B	Inlet	Outlet
Left	Right	Bi-Rotational	(cm³/rev)	(%100) (BAR)	(RPM)	(RPM)	(mm)	(mm)	C	D
34006312TAN	34006311TAN	4063GM431	63	290	300	1800	199	127	G 1"	G 3/4"
34007312TAN	34007311TAN	4073GM431	73	280			203	127	G 1 1/4"	
34008712TAN	34008711TAN	4087GM431	87	260			208	131		G 1"
34010912TAN	34010911TAN	40109GM431	109	250			216	137		
34013312TAN	34013311TAN	40133GM431	133	220			225	138	G 1 1/2"	
34015131TAN	34015111TAN	40151GM431	151	180			231	140,5		

*The values in the table refer to unidirectional pumps. Reversible pump max pressures are 10% lower than those shown in table. For different working conditions please consult our sales department.

40 SERIE TANDEM GEAR PUMPS ISO

40 SERİ DİŞLİ POMPA TANDEM ISO DİŞLİ POMPALAR

Inlet Pressure	0.3÷ 2 bar
Operating Viscosity	-12:100 cSt
Fluid Temperature	-40 ºC+145 ºC

Working Pressure	Contamination NAS 1638	Contamination ISO 4406	Filtre βx=75
≥200 bar	11	20/17	25 µm
≤200 bar	12	21/18	40 µm

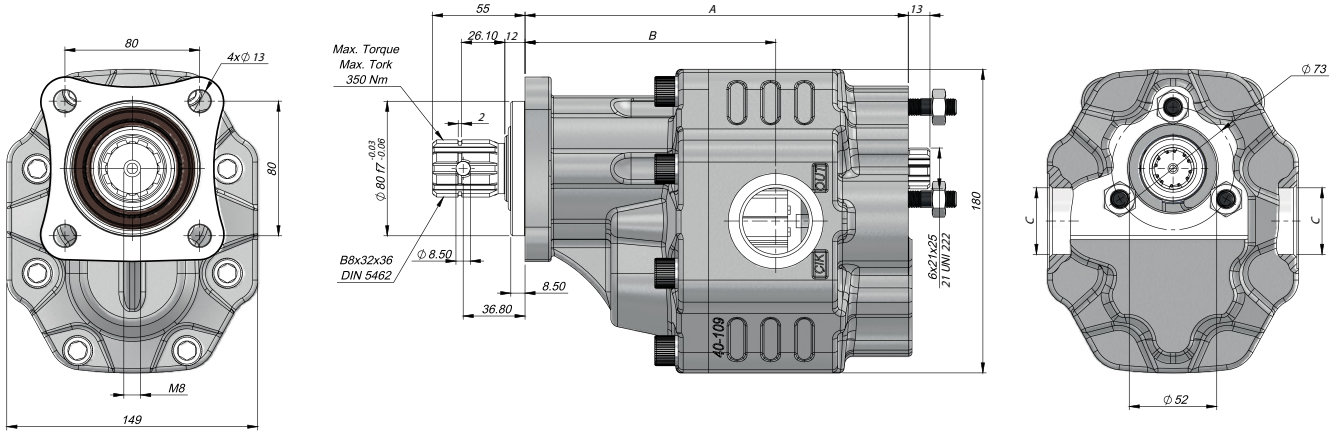

Code			Displacement	Max.Continuous Pressure	Min. Speed	Max.Continuous Speed	A	B	Inlet	Outlet
Left	Right	Bi-Rotational	(cm³/rev)	(%100) (BAR)	(RPM)	(RPM)	(mm)	(mm)	C	D
34006332TAN	34006331TAN	4063GM131	63	290	300	1800	211	139	G 1"	G 3/4"
34007332TAN	34007331TAN	4073GM131	73	280			215	139	G 1 1/4"	
34008732TAN	34008731TAN	4087GM131	87	260			220	143		G 1"
34010932TAN	34010931TAN	40109GM131	109	250			228	149		
34013332TAN	34013331TAN	40133GM131	133	220			237	150	G 1 1/2"	
34015132TAN	34015131TAN	40151GM131	151	180			243	152,5		

*The values in the table refer to unidirectional pumps. Reversible pump max pressures are 10% lower than those shown in table. For different working conditions please consult our sales department.

40 SERIE TANDEM GEAR PUMPS ASAE SHORT SHAFT

40 SERİ TANDEM ASAE KISA MİL DİŞLİ POMPALAR

Inlet Pressure	0.3÷ 2 bar
Operating Viscosity	-12:100 cSt
Fluid Temperature	-40 ºC+145 ºC

Working Pressure	Contamination NAS 1638	Contamination ISO 4406	Filtre βx=75
≥200 bar	11	20/17	25 µm
≤200 bar	12	21/18	40 µm

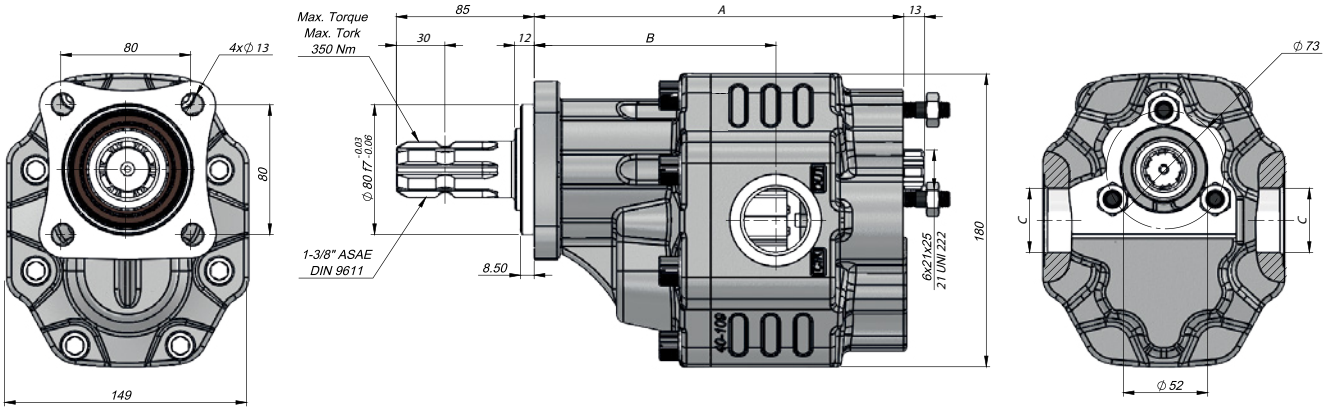

Code			Displacement	Max.Continuous Pressure	Min. Speed	Max.Continuous Speed	A	B	Inlet	Outlet
Left	Right	Bi-Rotational	(cm³/rev)	(%100) (BAR)	(RPM)	(RPM)	(mm)	(mm)	C	D
43206312TAN	43206311TAN	340063AS231	63	290	300	1800	211	139	G 1 1/4"	G 3/4"
43207312TAN	43207311TAN	340073AS231	73	280			215	139		
43208712TAN	43208711TAN	340087AS231	87	260			220	143		G 1"
43210912TAN	43210911TAN	340109AS231	109	250			228	149		
43213312TAN	43213311TAN	340133AS231	133	220			237	150	G 1 1/2"	
43215112TAN	43215111TAN	340151AS231	151	180			243	152,5		

*The values in the table refer to unidirectional pumps. Reversible pump max pressures are 10% lower than those shown in table. For different working conditions please consult our sales department.

40 SERIE TANDEM GEAR PUMPS ASAE LONG SHAFT

40 SERİ TANDEM ASAE UZUN MİL DİŞLİ POMPALAR

Inlet Pressure	0.3÷ 2 bar
Operating Viscosity	-12:100 cSt
Fluid Temperature	-40 ºC+145 ºC

Working Pressure	Contamination NAS 1638	Contamination ISO 4406	Filtre βx=75
≥200 bar	11	20/17	25 µm
≤200 bar	12	21/18	40 µm

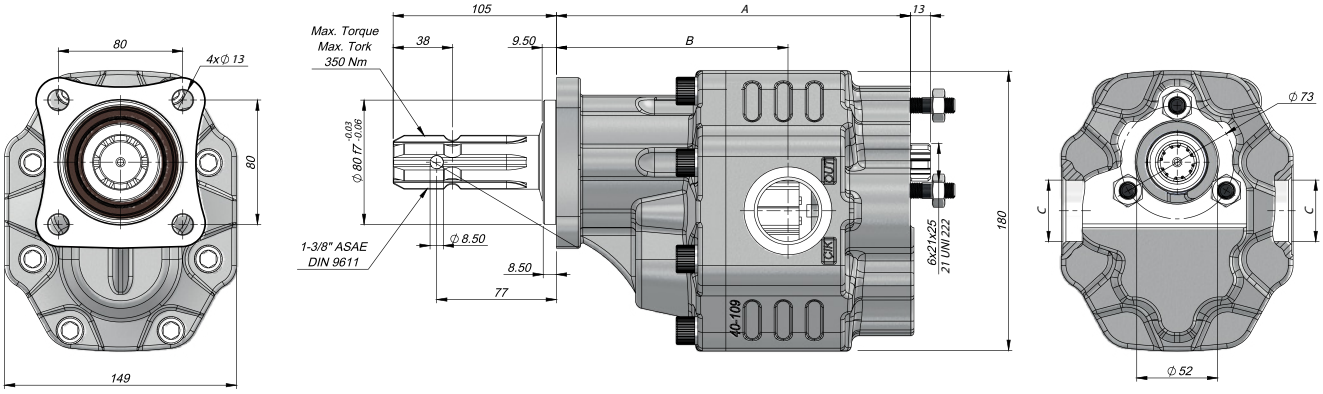

Code			Displacement	Max.Continuous Pressure	Min. Speed	Max.Continuous Speed	A	B	Inlet	Outlet
Left	Right	Bi-Rotational	(cm³/rev)	(%100) (BAR)	(RPM)	(RPM)	(mm)	(mm)	C	D
43306312TAN	43306311TAN	340063AL831	63	290	300	1800	211	139	G 1 1/4"	G 3/4"
43307312TAN	43307311TAN	340073AL831	73	280			215	139		
43308712TAN	43308711TAN	340087AL831	87	260			220	143		G 1"
43310912TAN	43310911TAN	340109AL381	109	250			228	149		
43313312TAN	43313311TAN	340133AL831	133	220			237	150	G 1 1/2"	
43315112TAN	43315111TAN	340151AL831	151	180			243	152,5		

*The values in the table refer to unidirectional pumps. Reversible pump max pressures are 10% lower than those shown in table. For different working conditions please consult our sales department.