6 PISTON PUMP ISO

6 PİSTONLU POMPA ISO

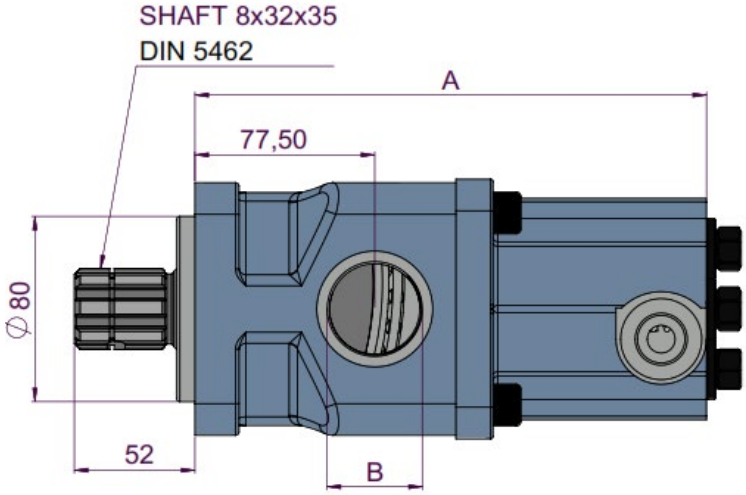

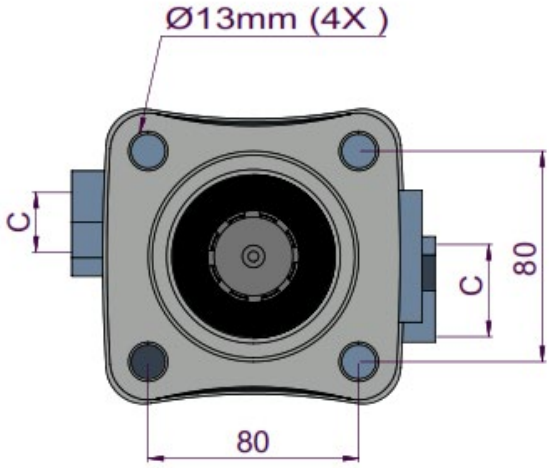

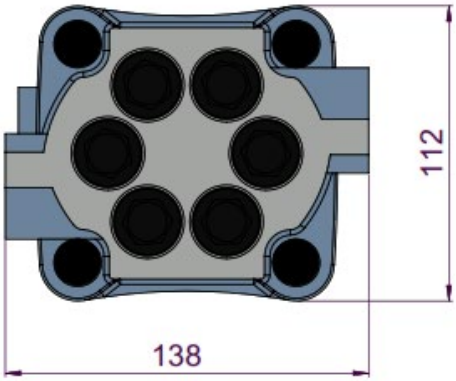

CODE KOD	DISPLACEMENT DEBİ (Lt/min)	A (mm)	INLET GİRİŞ (B)	OUTLET ÇIKIŞ (C)	Max. Continuous Pressure Max. Sürekli Basınç(Pnom)	Max. Peak Pressure Max. Pik Basınç (Pmax)
35103523	35	220	R1 1/4"-11	R3/4"-14	270	325
35104523	45	220			250	300

6 PISTON PUMP REAR OUTLET ISO

6 PİSTONLU POMPA ARKADAN ÇIKIŞ

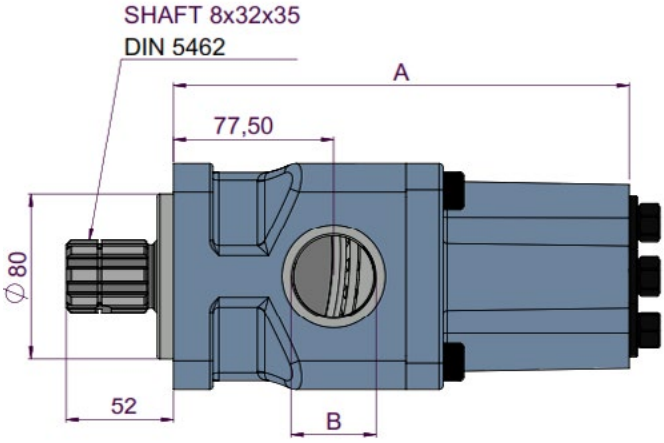

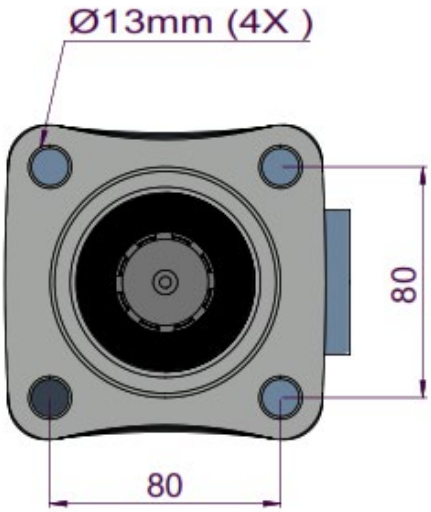

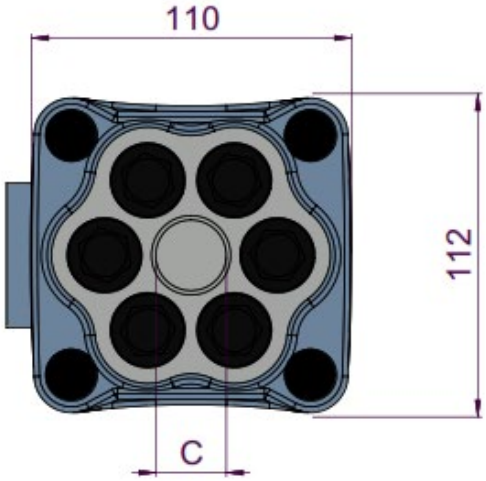

CODE KOD	DISPLACEMENT DEBİ (Lt/min)	A (mm)	INLET GİRİŞ (B)	OUTLET ÇIKIŞ (C)	Max. Continuous Pressure Max. Sürekli Basınç(Pnom)	Max. Peak Pressure Max. Pik Basınç (Pmax)
35103523A	35	220	R1 1/4"-11	R3/4"-14	270	325
35103523A	45	220			250	300

6 PISTON HIGH PRESSURE PUMP ISO

6 PİSTONLU YÜKSEK BASINÇ POMPASI ISO

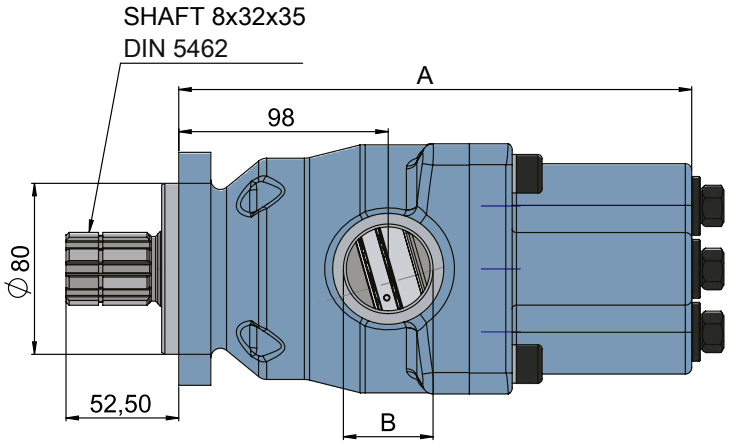

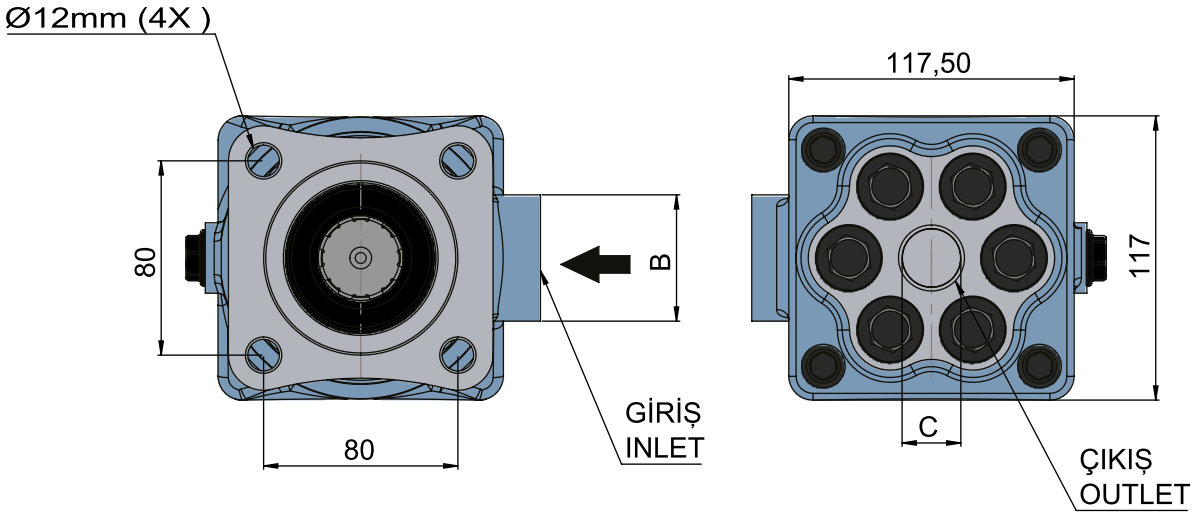

Code	Product Description	Displacement (Lt/min)	A (mm)	Inlet (B)	Outlet (C)	Max. Continuous Pressure (Pnom)	Max. Peak Pressure (Pmax)
36105533	55 cc Hydraulic Piston Pump ISO High Pressure	55	240	R1 1/4"-11	R3/4"-14	320	480

6 PISTON HIGH PRESSURE PUMP UNI

6 PİSTONLU YÜKSEK BASINÇ POMPASI UNI

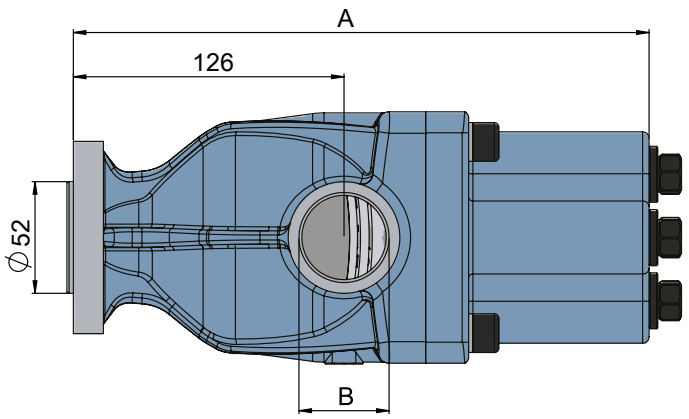

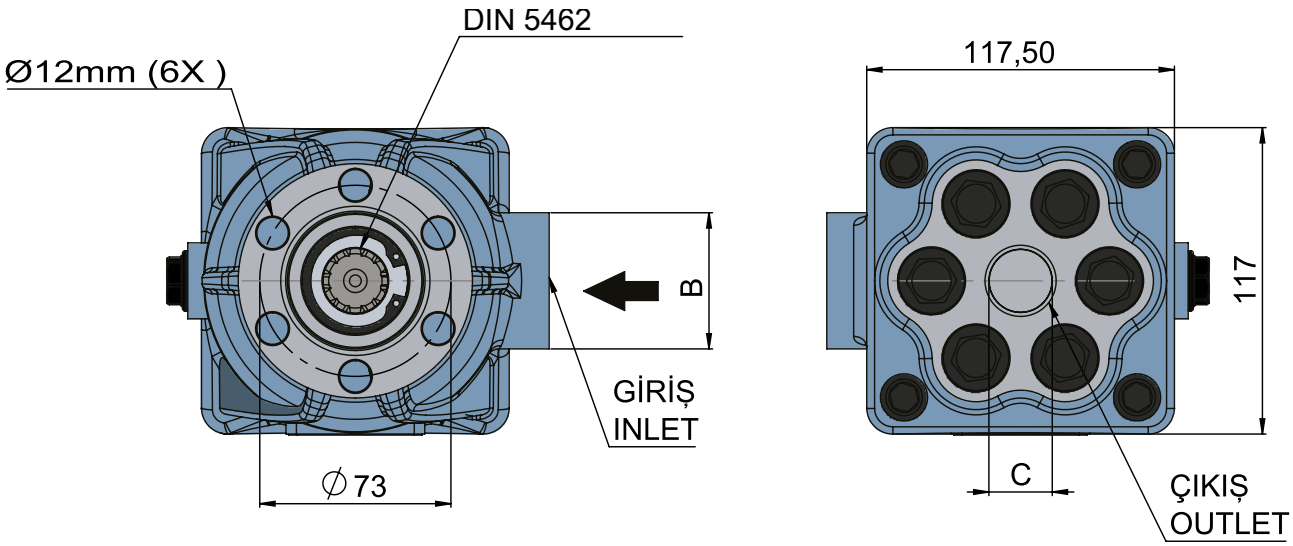

Code	Product Description	Displacement (Lt/min)	A (mm)	Inlet (B)	Outlet (C)	Max. Continuous Pressure (Pnom)	Max. Peak Pressure (Pmax)
36105513	55 cc Hydraulic Piston Pump UNI High Pressure	55	268	R1 1/4"-11	R3/4"-14	320	300

9 PISTON PUMP ISO

9 PİSTONLU POMPA ISO

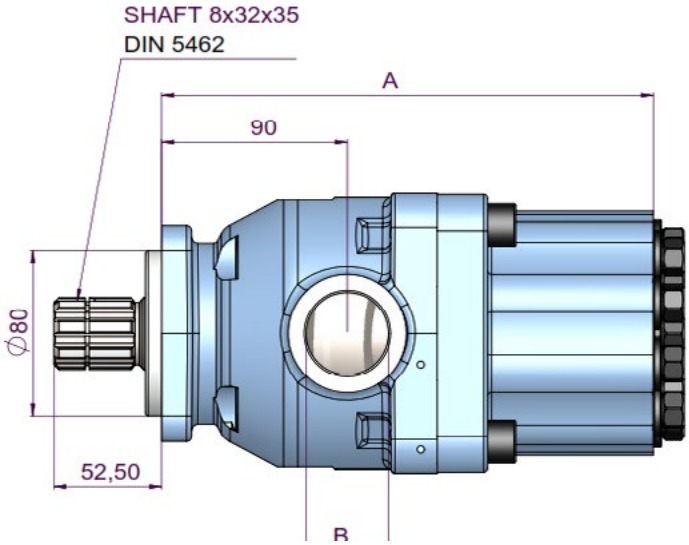

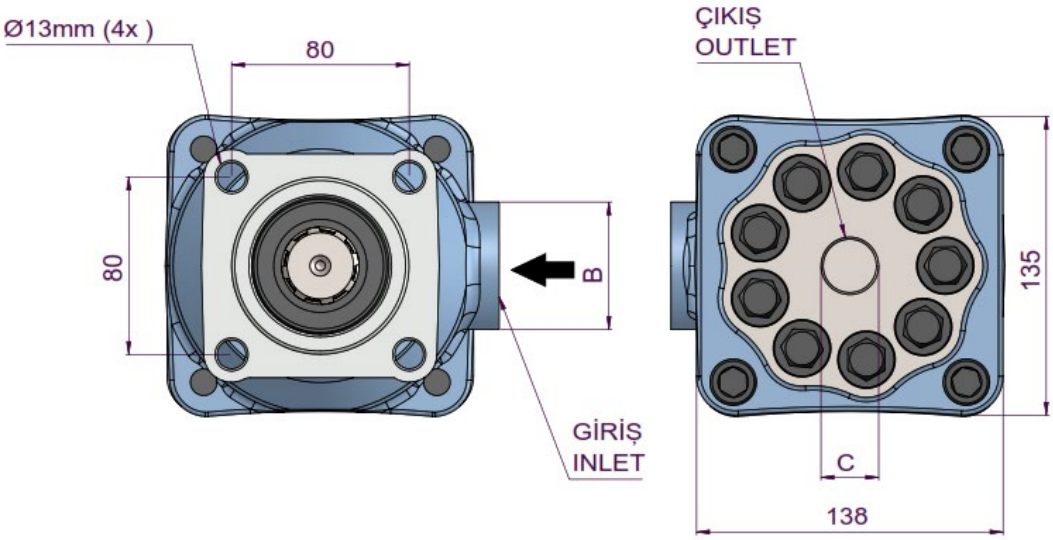

Code	Product Description	Displacement (Lt/min)	A (mm)	Inlet (B)	Outlet (C)	Max. Continuous Pressure (Pnom)	Max. Peak Pressure (Pmax)
35006023	RIGHT/SAĞ	60	238	R1 1/4"-11	R3/4"-14	250	300
35008023	LEFT/SOL	80	238			250	300

10 PISTON PUMP ISO

10 PİSTONLU POMPA ISO

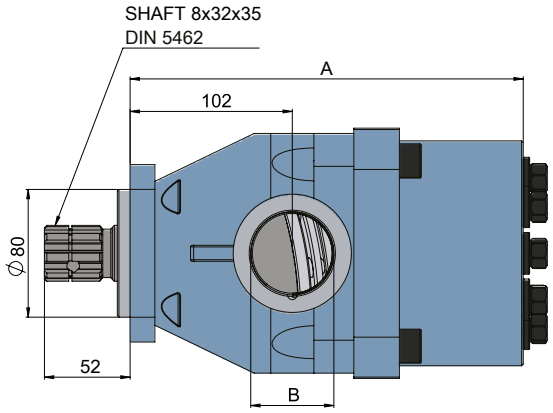

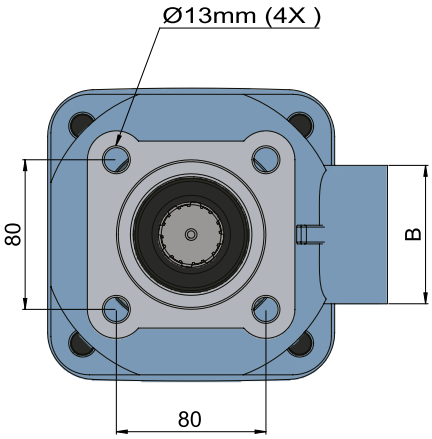

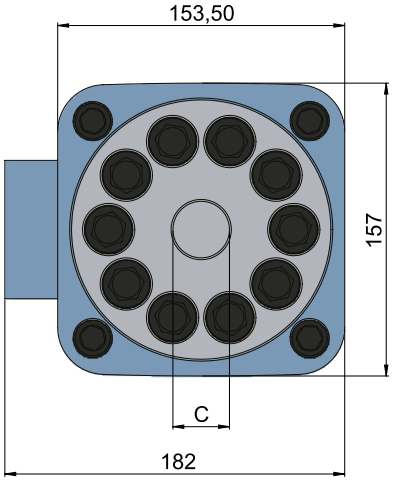

CODE KOD	DISPLACEMENT DEBİ (Lt/min)	A (mm)	INLET GİRİŞ (B)	OUTLET ÇIKIŞ (C)	Max. Continuous Pressure Max. Sürekli Basınç(Pnom)	Max. Peak Pressure Max. Pik Basınç (Pmax)
35508523	85	246	Ø52mm	R1"-11	300	450
35510023	100	246			310	460

BENT AXIS PUMP 80 cc

CODE : 35318031 (CW) - 35318032 (CCW)

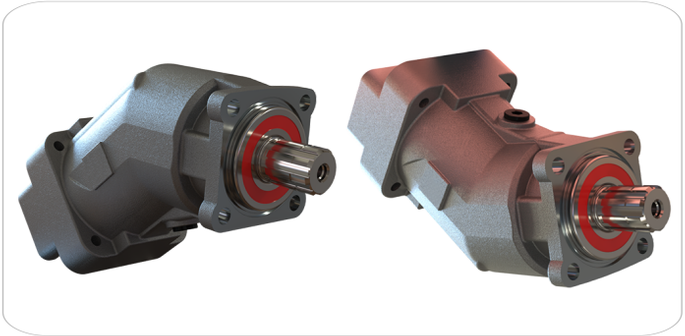

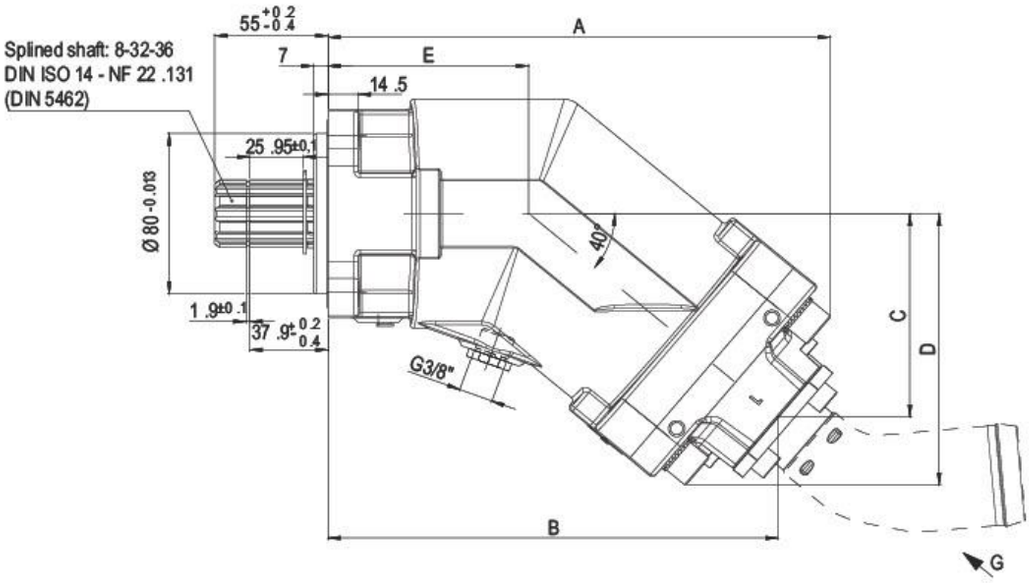

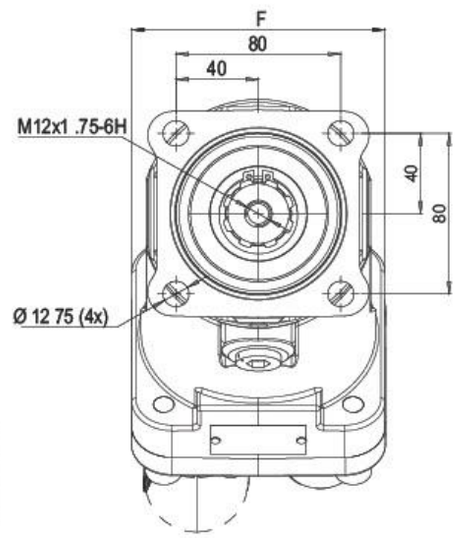

VIEW G

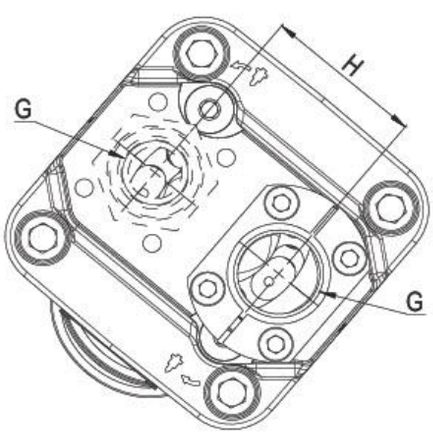

Additionnal bore on the shaft on request.

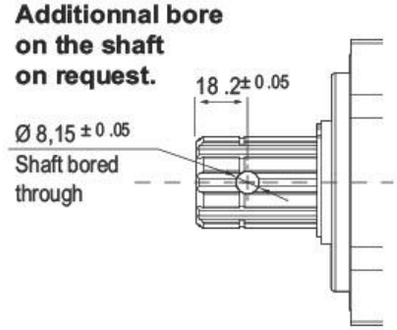

Parallel Keyed Shaft: DIN 6885 12x8x63

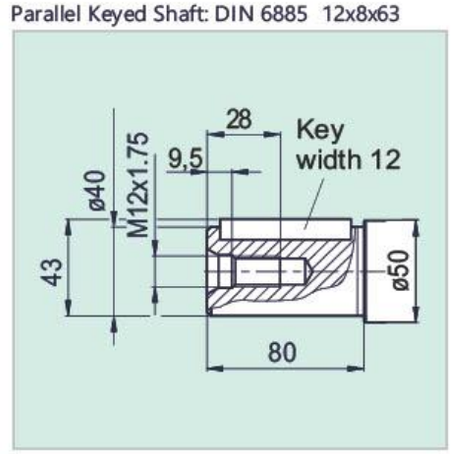

cc	80,40
A	241,7
B	220,9
C	103,5
D	133,3
E	97,4
F	123,0
G	G1"
H	60

Max. Peak Continuous Presure (bar)	420/380
Maximum Speed (rpm)	2150
Max. Torque Absorbed at 380 Bar (N.m)	509
Weight Without Inlet Fitting (kg)	14.8
Weight With 2" Inlet Fitting (kg)	15.2
Torque Without Fitting (N.m) Torque With Fitting (N.m)	17.8 18.3

Direction of Rotation; Bi-Directional

The pumps rotate clockwise or counter-clockwise depending on the direction of hydraulic flow entering the pump.

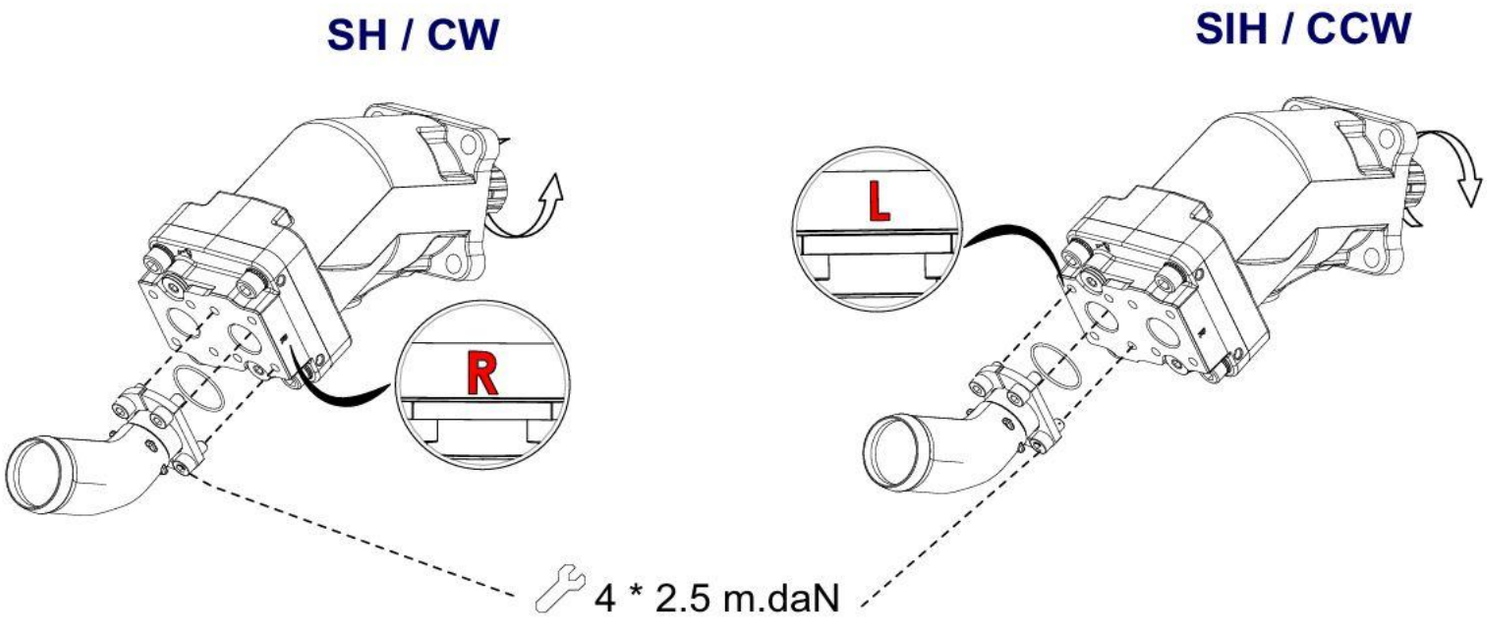

BENT AXIS PUMP L SERIES

EKSENEL POMPA L SERİSİ

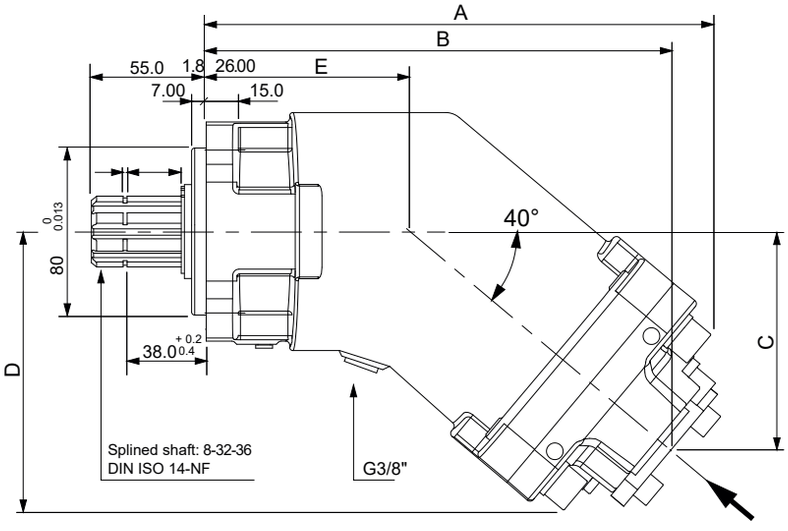

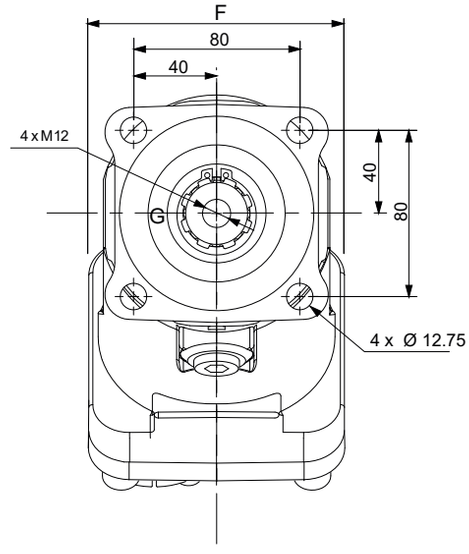

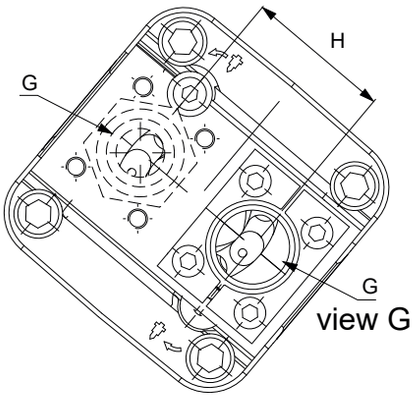

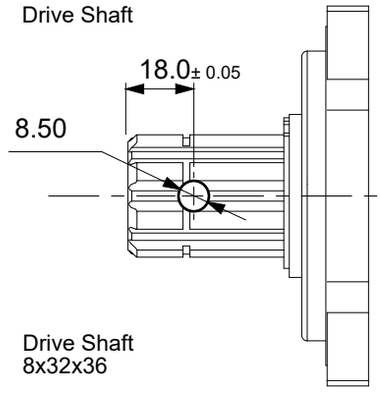

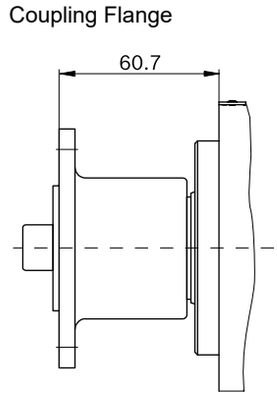

	5	12	18	25	32	40	50	56	63	80	108	130
cc	5,00	12,00	18,00	25,00	32,00	40,20	50,00	56,40	63,00	80,00	108,4	130,0
A	195,0	195,0	195,0	195,0	202,0	202,0	215,0	215,0	215,0	242,0	242,0	242,0
B	176,0	176,0	176,0	176,0	183,0	183,0	196,0	196,0	196,0	221,0	223,0	223,0
C	76,0	76,0	76,0	76,0	82,0	82,0	94,0	94,0	94,0	104,0	105,0	105,0
D	104,0	104,0	104,0	104,0	108,0	108,0	118,0	118,0	118,0	132,0	132,0	132,0
E	86,0	86,0	86,0	86,0	86,0	86,0	86,0	86,0	86,0	98,0	98,0	98,0
F	108,0	108,0	108,0	108,0	108,0	108,0	108,0	108,0	108,0	122,0	122,0	122,0
G	3/4"	3/4"	3/4"	3/4"	3/4"	3/4"	3/4"	3/4"	3/4"	1"	1"	1"
H	54	54	54	54	54	54	54	54	54	60	60	60

BENT AXIS PUMP L SERIES

EKSENEL POMPA L SERİSİ

		5	12	18	25	32	40	50	56	63	80	108	130
Displacement	***cc***	5,00	12,00	18,00	25,00	32,00	40,20	50,00	56,40	63,00	80,00	108,4	130,0
Theoretical oil flow l/min at pump speed	***1000 rpm***	5,00	12,00	18,00	25,00	32,00	40,20	50,00	56,40	63,00	80,00	108,4	130,0
	1500 rpm	7,50	18,00	27,00	37,50	48,00	60,30	75,00	84,60	94,50	120,0	162,6	195,0
Maximum Pump Speed													
- Continuous	***rpm***	2500	2300	2300	2300	2250	1900	1900	1900	1900	1700	1700	1600
- Limited	***rpm***	3300	3100	2900	2700	2700	2500	2500	2300	2300	2100	1900	1750
Max. Continuous Pressure	***bar***	350	350	350	350	350	350	350	350	350	350	350	350
Max. Intermit. Peak Pressure	***bar***	400	400	400	400	400	400	400	400	400	400	400	400
Max. Torque at 350 bar	***Nm***	66	71	105	146	190	240	292	330	360	460	620	746
Weight													
- Without inlet fitting	***kg***	8,20	9,00	9,00	9,50	10,50	10,50	11,00	11,50	11,50	15,00	15,50	16,50
- With inlet fitting	***kg***	8,65	9,40	9,40	9,90	10,90	10,90	11,40	11,90	11,90	15,40	15,90	17,00
Rotation		cw,ccw	cw,ccw	cw,ccw	cw,ccw	cw,ccw	cw,ccw	cw,ccw	cw,ccw	cw,ccw	cw,ccw	cw,ccw	cw,ccw
Fluid		Mineral Based Hydraulic Oils											
Inlet & Outlet		3/4"	3/4"	3/4"	3/4"	3/4"	3/4"	3/4"	3/4"	3/4"	1"	1"	1"

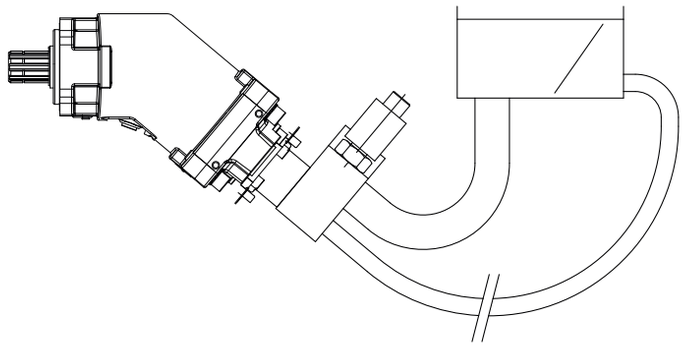

Overhang Torque													
- Without inlet fitting	***N.m***	8,20	8,70	8,75	8,82	11,00	11,12	11,72	11,79	11,82	17,80	17,92	19,90
- With inlet fitting	***N.m***	8,65	9,15	9,19	9,23	11,52	11,40	12,20	12,24	12,28	18,33	18,45	20,45

Changing the Direction of Rotation

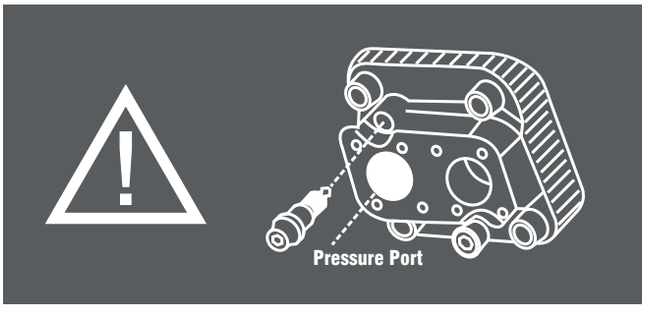

Before of change direction of rotation on the pump, please remove suction fitting and screw it onto the other port.
Pump shaft must not be rotated during this operation..

!! CHECK THE ROTATION FROM THE POWER TAKE OFF

!! THE ROTATION DIRECTION OF THE PUMP

Left	Right
Default delivered.	Change rotation.

HOW TO CHANGE ROTATION OF THE BENT AXIS L SERIE PUMP;
Remove the inlet fitting with split flange,

- Remove the setting screw,
- Remove the plug,
- Put the setting screw where the plug was,
  Put the plug where the setting screw was,
- Put seal on the inlet fitting, then the inlet fitting on the side
- where the plug is, and fix with the split flange,
- Tighten with the screws.

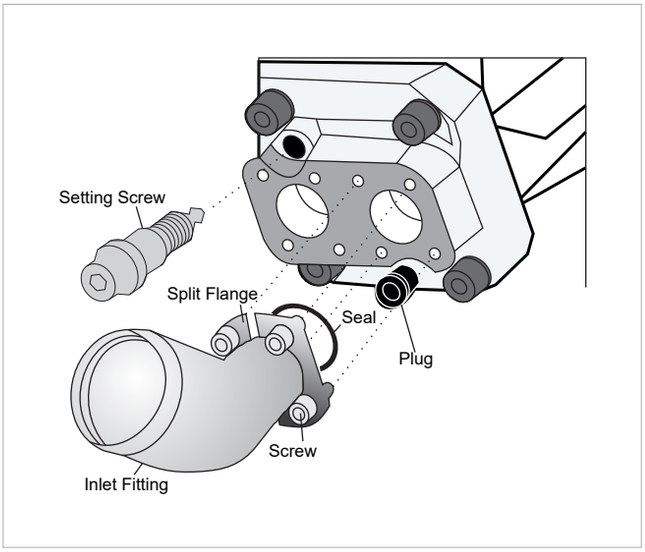

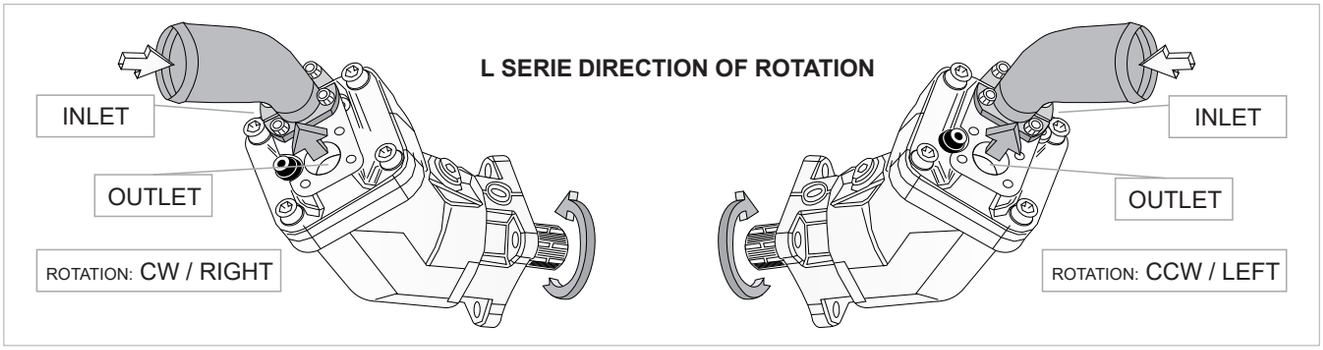

NOTE I
The Inlet Fitting is pre-assembled on delivery and must be tightened to the torque specified for the thread size before installation.

NO**TE II**
To change the direction of rotation of the L Serie Bent Axis Pump, you must change the pressure connection from to right port to the left port.

NOTE **III**
If the pump drive shaft moves while making the change, the L Serie Bent Axis Pump may be damaged.
After unscrewing the pressure connection, do not turn the drive shaft of the pump!

FLUID

Please check the following recommendations:
Mineral oil

Viscosity	20 to 40 cSt
Min. viscosity	5 cSt
Viscosity for correct operation	10 to 400 cSt
Recommended filtration	10µ absolute class 9 NAS 1638 class 6 SAE class 18/15 ISO
Max temp.	100° C

For detailed information about L Serie Bent Axis Pumps, please contact with Technical Department !!!

Installation & User Guide

The L Serie Bent Axis Pumps fitted with a rubber front seal.

INSTALLATION
L Serie Bent Axis Pumps are direct mounting on the PTO.
Grease the splined shaft before installation. Do not tap the gear wheel/driver into position.

Remove any mounted screws on the pump.
The L Serie Bent Axis Pumps was delivered with protective covers and plastic/threaded plugs.
It should be removed before of install.Please check seals and surfaces.If sealing or other surfaces damaged please contact your responsible Service Partner.

Start up and run the pump at medium speed (800 to 1000 rpm at the PTO) until the oil flowing out of the pump. (There are no more air bubbles.)

OIL SUPPLY
Oil and supply line should be clean, and the supply line is airtight.

SUCTION LINE
Connect the suction line, tighten the suction connection bolts in diametric pairs.
Connect the pressure line.

REPAIR
We offers a comprehensive range of services for the repair of our Bent Axis Pumps.
Repairs to the L Serie Bent Axis Pump may only be performed by authorized, skilled and instructed personnel. Only use original and pre-installed our spare parts from supplied to Manufacturer..

Tested and pre-installed L Serie Bent Axis Pumps successful repair requiring only little time.

SPARE PARTS
The spare parts list and the L Serie Bent Axis Pump order specific.
When ordering spare parts, quote the material and complete Ordering code number of the L Serie Bent Axis Pump as well as the right numbers of the spare parts.

RISK OF DAMAGE!
Do not touch the drive shaft of the L Serie Bent Axis Pumps
Do not touch sensor, valves and fittings
Do not touch sealing surfaces.

DIMENSIONS & WEIGHTS

Weight													
- Without inlet fitting	***kg***	8,20	9,00	9,00	9,50	10,50	10,50	11,00	11,50	11,50	15,00	15,50	16,50
- With inlet fitting	***kg***	8,65	9,40	9,40	9,90	10,90	10,90	11,40	11,90	11,90	15,40	15,90	17,00

Address all questions regarding spare parts to your responsible Our Service Partner or the technical service department of the manufacture's plant / factory for the L Serie Bent Axis Pumps.

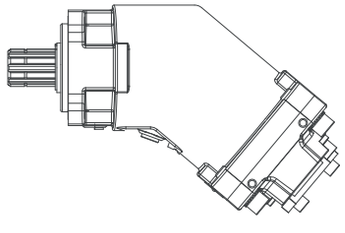

BENT AXIS PUMP P SERIES

EKSENEL POMPA P SERİSİ

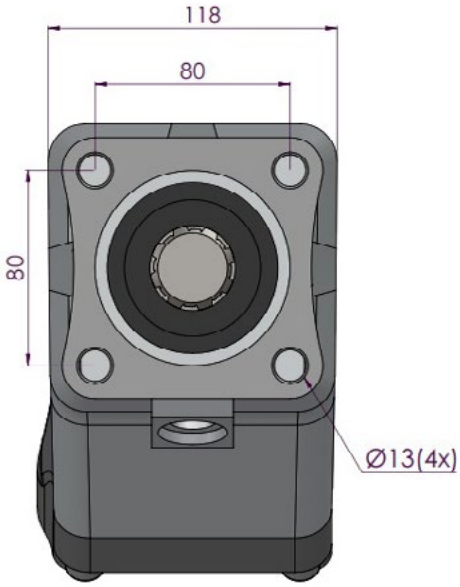

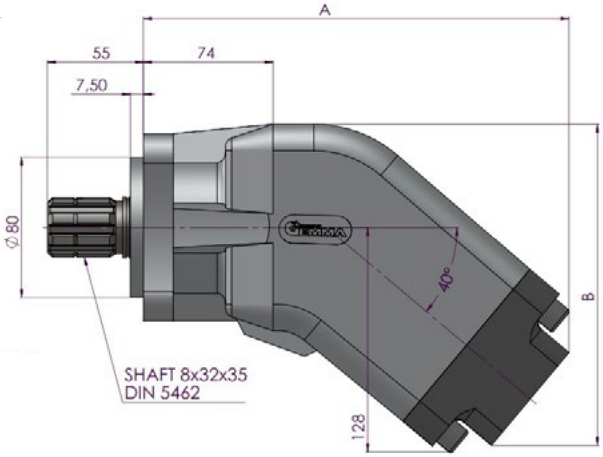

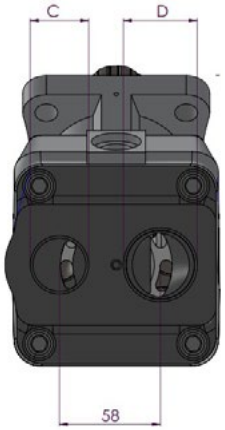

Product Code	Product Description	Displacement (Lt/min)	A (mm)	B (mm)	Inlet (C)	Outlet (D)	Max. Continuous Pressure (Pnom)	Max. Peak Pressure (Pmax)
35503531	RIGHT/SAĞ	35	243	183	R 3/4"	R 1/4"	400	450
35503532	LEFT/SOL	35	243	183			400	450
35504531	RIGHT/SAĞ	45	243	183			400	450
35504532	LEFT/SOL	45	243	183			400	450
35505531	RIGHT/SAĞ	55	243	183			400	450
35505532	LEFT/SOL	55	243	183			400	450
35506531	RIGHT/SAĞ	65	243	183			400	450
35506532	LEFT/SOL	65	243	183			400	450
35508531	RIGHT/SAĞ	85	243	183	R 1"	R 1/2"	375	430
35508532	LEFT/SOL	85	243	183			375	430
35510531	RIGHT/SAĞ	105	243	183			350	400
35510532	LEFT/SOL	105	243	183			350	400

BENT AXIS PUMP R SERIES

EKSENEL POMPA R SERİSİ

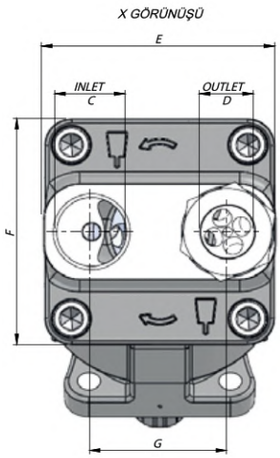

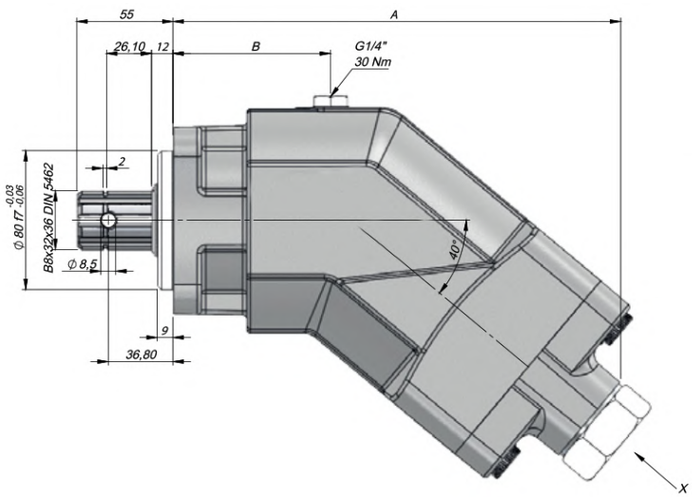

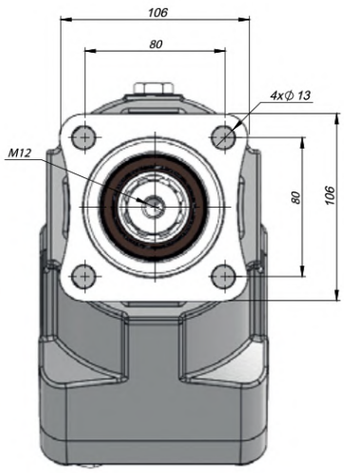

Tapaların Sıkma Torku Tightening Torque Of The Plugs	
G 1/2"	55-65 Nm
G 3/4"	90-100 Nm
G 1"	135-160 Nm
G 1 1/4"	200-230 Nm

Kod Code	İletim Hacmi Displacement	Maks. Sürekli Basınç Max. Continuous Pressure	Min. Hız Min. Speed	Maks. Hız Max. Speed (RPM)		A	B	C	D	E	F	G
	(cm³/rev)	(100%)(BAR)	(RPM)	(NOM)	(MAX.)	(mm)	(mm)	(inch)	(inch)	(mm)	(mm)	(mm)
35302231 35302232	22	350	400	3050	4300	180	58	G 3/4"	G 1/2"	89	89	52
35303331 35303332	33			2750	3900							
35304531 35304532	45			2650	3800	210	78	G 1"	G 3/4"	108.7	108.7	59
35305631 35305632	56			2250	3700	218	80			110.5	108	64
35306531 35306532	65			2200	3200							
35308031 35308032	80			2150	3100	245	94	G 1 1/4"	G 1"	127	118	69
35310831 35310832	107			2000	2800	255				131.6	130	77
35312531 35312532	125	250	300	1750	2500							

31-Cw Rotation
32-Ccw Rotation

PISTON PUMP Z SERIES

GEMMA PISTON POMPA Z SERİSİ

SPECIFICATIONS AND TECHNICAL DATA

CODE				35703431/32	35704731/32	35706431/32	35708431/32	35710631/32
Displacement		Vg	cm^3/n $cm^3/rev.$	34.60	47.39	64.08	84.38	107.70
Max operating pressure		P1	bar	450	450	450	400	350
Max peak pressure	(≤ 0.1 s)	P3	bar	500	500	500	450	400
Max intermittent speed	(P ≤ 30 bar)	n3	n/min r.p.m.	3000	2500	2500	2000	2000
Max continuous speed	(≤ P1)	n1	n/min r.p.m.	2300	1900	1900	1600	1500
Min intermittent speed	(≤ P1 x 0.5) (max 30 s)	n4	n/min r.p.m.	300				
Suction pressure (absolute)		P	bar	0.7 ÷ 1.5				
Operating viscosity range		√	cST	9 ÷ 75				
Optimal viscosity range		√	cST	15 ÷ 46				
Start up max viscosity		√	cST	1000				
Fluid temperature °C (t)		t	°C	-25° ÷ 80°				

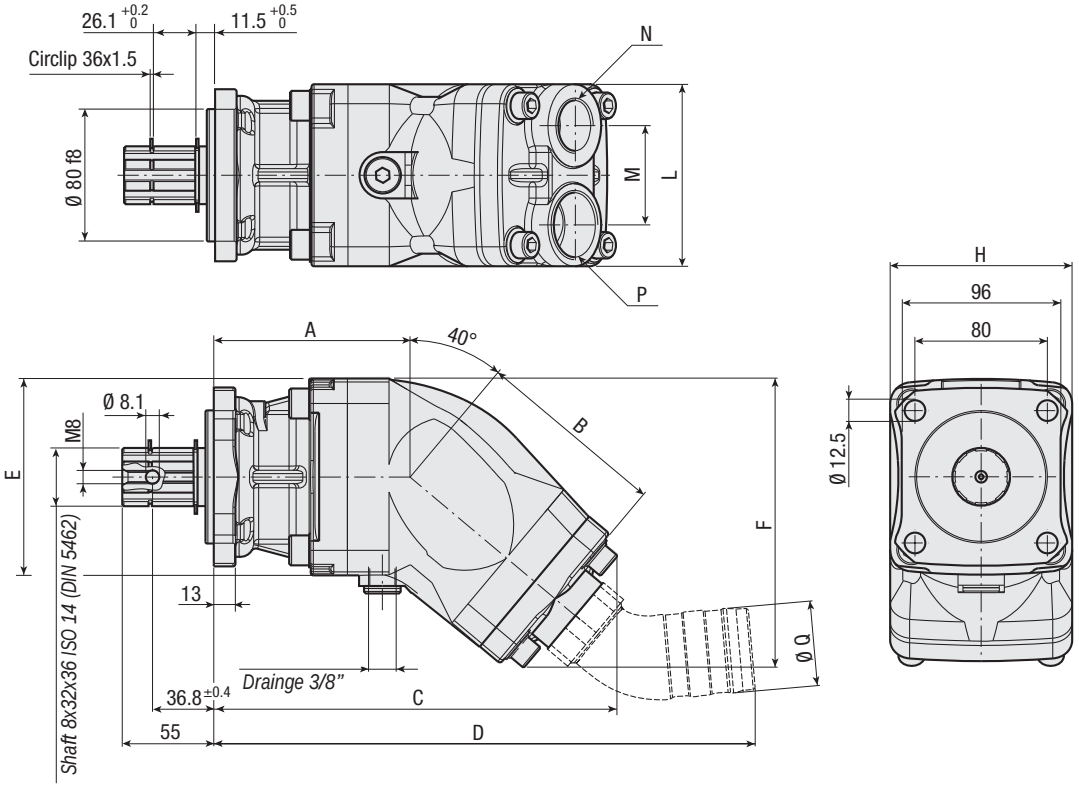

SPECIFICATIONS AND TECHNICAL DATA

CODE	A mm	B mm	C mm	D mm	E mm	F mm	G mm	H mm	L mm	M mm	OUTLET N	INLET P	INLET Q mm	WEIGHT kg
35703431/32	109	113	220	308	107	157	107.5	102	95	46	3/4" G	1" G	45	10.5
35704731/32	109	113	220	308	107	157	107.5	102	95	46	3/4" G	1" G	45	10.5
35706431/32	118	128	240	328	118	173	107.5	110	110	60	1" G	1" ¼ G	51	13.5
35708431/32	118	128	240	328	118	173	107.5	110	110	60	1" G	1" ¼ G	51	13.5
35710631/32	118	128	240	328	118	173	107.5	110	110	60	1" G	1" ¼ G	51	13.5

Piston pump Z series reserves the right to modify the technical data mentioned into this catalogue without notice.
The herewith mentioned data are not bounding.

DIAGRAMS

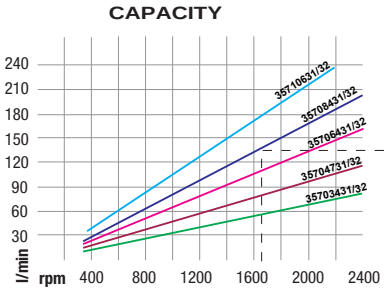

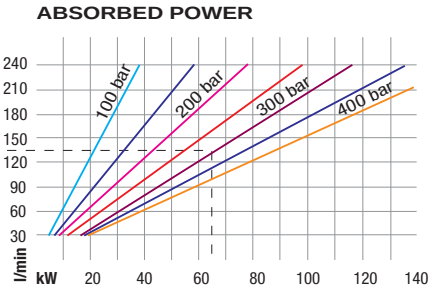

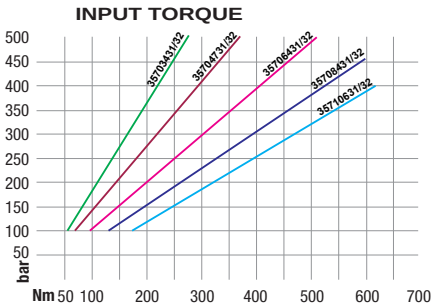

THE ABOVE SPECIFICATIONS REFER TO OIL TYPE ISO VG 46 AT 50° C (ν=30 cSt)

PISTON PUMP Z SERIES

FILTERING

> Filtering on return line (or outlet) recommended. Refer to the side table.

A filter on the inlet is not recommended because of possible cavitation problems.

If it is necessary, the suction pressure limit of -0,3 bar (corresponding to 0,7 absolute bar) must be respected.

Working Press P2	Contamination		Filter βx = 75
	NAS 1638	ISO 4406	
≤ 200 bar	10	19/16	25 µm
< 300 bar	9	18/15	20 µm
≥ 300 bar	8	17/14	10 µm

FITTINGS

> Make use of cylindric gas-fi ttings (BSP) with O-ring, bonded-seal on the pump. Do NOT use fittings with conical thread (NPT).

INSTALLATION INSTRUCTIONS

BEFORE STARTING UP MAKE SURE THAT THE PUMP IS FILLED WITH OIL, EITHER BY BLEEDING THE AIR THROUGH THE DRAINAGE HOLE OR BY FILLING THE PUMP PREVIOUSLY.

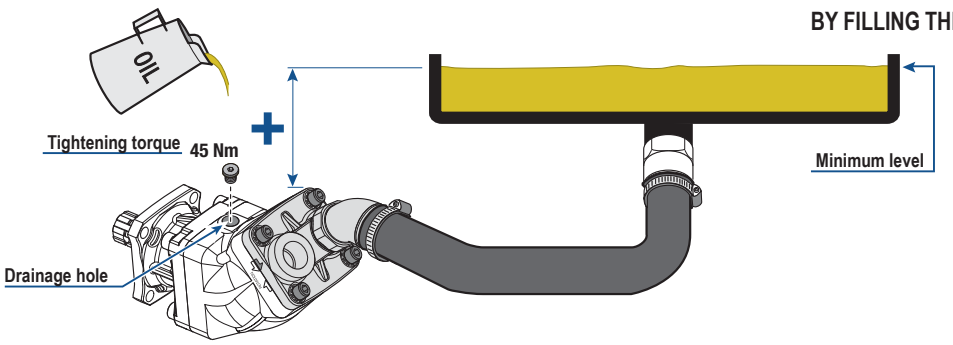

Failing to observe this rule may cause damages to the pump.

DIRECTION OF ROTATION-CHANGE OF ROTATION

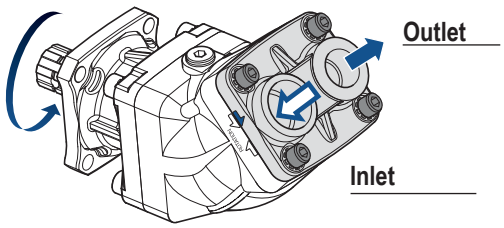

Choosing the direction of rotation.

CLOCKWISE ROTATING PUMP (ANTICLOCKWISE ROTATING P.T.O.)

Tightening torque screws 80 Nm

To change the direction of rotation remove the 4 screws and, keeping the distributor body close to the pump, rotate it by 180°. Tighten the 4 screws at 80 ±5 Nm.

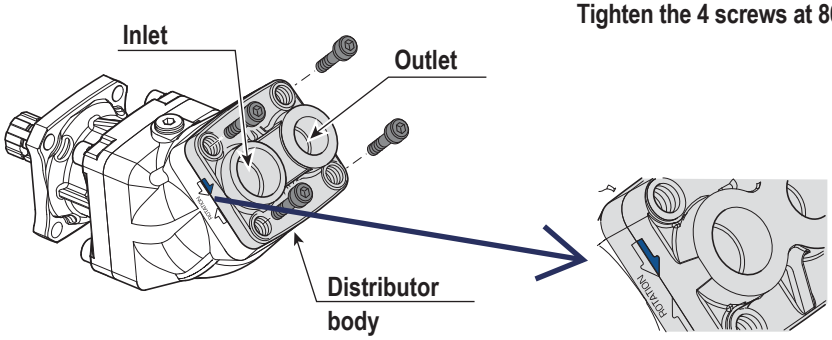

ARROW + NOTCH = DIRECTION OF ROTATION

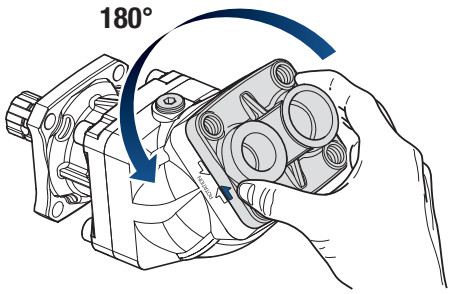

WARNING:
during this operation the distributor body must not move away from the pump body more than 2 mm.

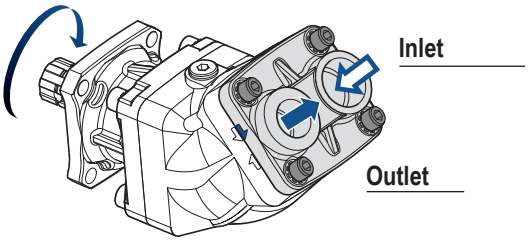

ANTICLOCKWISE ROTATING PUMP (CLOCKWISE ROTATING P.T.O.)

BENT AXIS PUMP S SERIES

EKSENEL POMPA S SERİSİ

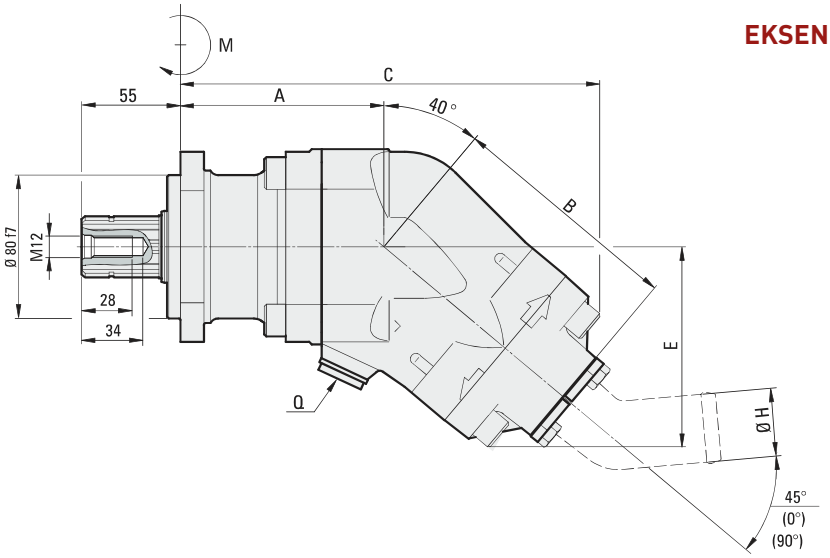

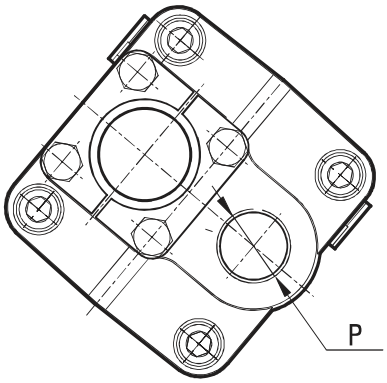

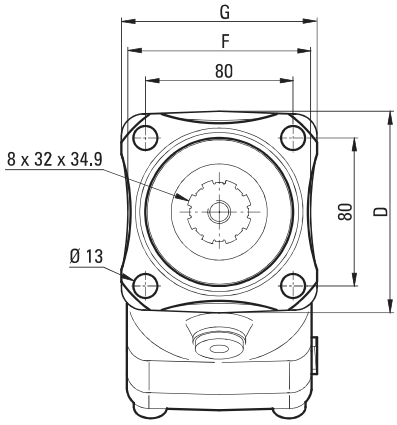

DL4

POMPA KODU PUMP CODES	ROTATION YÖN	DISPLACEMENT (cm³/rev)	A (mm)	B (mm)	C (mm)	D (mm)	E (mm)	F (mm)	G (mm)	H (mm)	P (ISO G)	Q (ISO G)	Max. Working Pressure(bar)	Max. Pump Speed Continuous Limited (rpm)
35201231	RIGHT/SAĞ	12.6	97	112	202	99	97	89	97	38-50	3/4	1/2	400	2300-3000
35201232	LEFT/SOL													
35201731	RIGHT/SAĞ	17.0	97	112	202	99	97	89	97	38-50	3/4	1/2	400	2300-3000
35201732	LEFT/SOL													
35202531	RIGHT/SAĞ	25.4	97	112	202	99	97	89	97	38-50	3/4	1/2	400	2300-3000
35202532	LEFT/SOL													
35203431	RIGHT/SAĞ	34.2	97	112	202	99	97	89	97	38-50	3/4	1/2	400	2300-3000
35203432	LEFT/SOL													
35204031	RIGHT/SAĞ	41.2	113	130	228	109	109	99	106	38-50	3/4	1/2	400	1900-2500
35204032	LEFT/SOL													
35204531	RIGHT/SAĞ	47.1	113	130	228	109	109	99	106	38-50	3/4	1/2	400	1900-2500
35204532	LEFT/SOL													
35205631	RIGHT/SAĞ	56.0	113	130	228	109	109	99	106	38-50	3/4	1/2	400	1900-2500
35205632	LEFT/SOL													
35206531	RIGHT/SAĞ	63.6	113	130	228	109	109	99	106	38-50	3/4	1/2	400	1900-2500
35206532	LEFT/SOL													
35208531	RIGHT/SAĞ	83.6	123	147	259	126	126	115	123	50-64	1	1/2	400	1500-2000
35208532	LEFT/SOL													
35210831	RIGHT/SAĞ	108.0	123	147	259	126	126	115	123	50-64	1	1/2	400	1500-2000
35210832	LEFT/SOL													

DUAL FLOW HIGH PRESSURE PISTON PUMP

PISTON PUMPS & MOTORS OVERAL EFFICIENCY CURVE

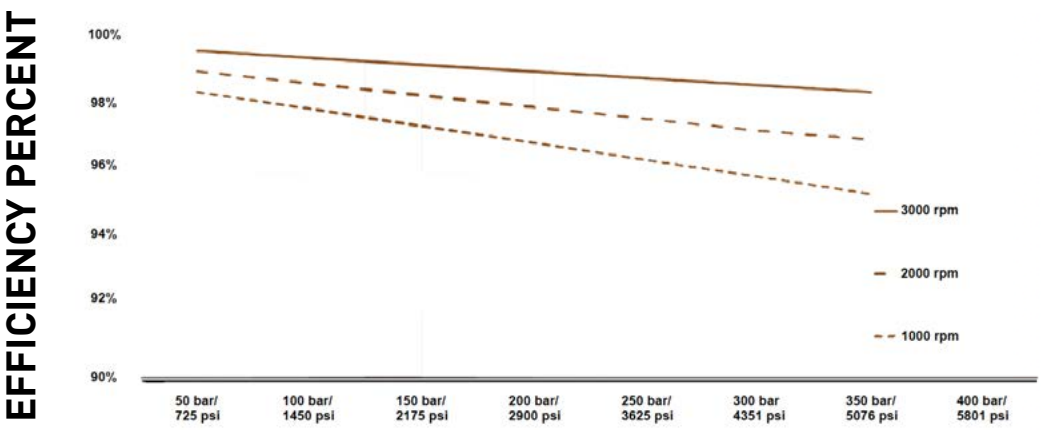

53+53 and 56+26 cc Options
High Pressure
High Efficiency
Long Life
Low Working Noise
For Use DIN mount PTO
Nickel Cover
Seal and Color Options
Parallel Working Operation

Pump Code	Product Description	Displacement @1000 RPM	Max. Continuous Pres. (BAR)	Maximum Peak Pres. (BAR)	Continuous Rotating Speed (RPM)	Max. Rotating Speed (RPM)	Overhang Torque (Nm)	Working Temperature Min/Max (°C)	Weight (KG)
35425353R	RIGHT/SAĞ	53+53	300	400	1900	2500	21	-35 / +90	18
35425353L	LEFT/SOL								
35425626R	RIGHT/SAĞ	56+26	300	400	1900	2500	21	-35 / +90	18
35425626L	LEFT/SOL								

HYDRAULIC GEMMA

PDV Straight Piston Pump

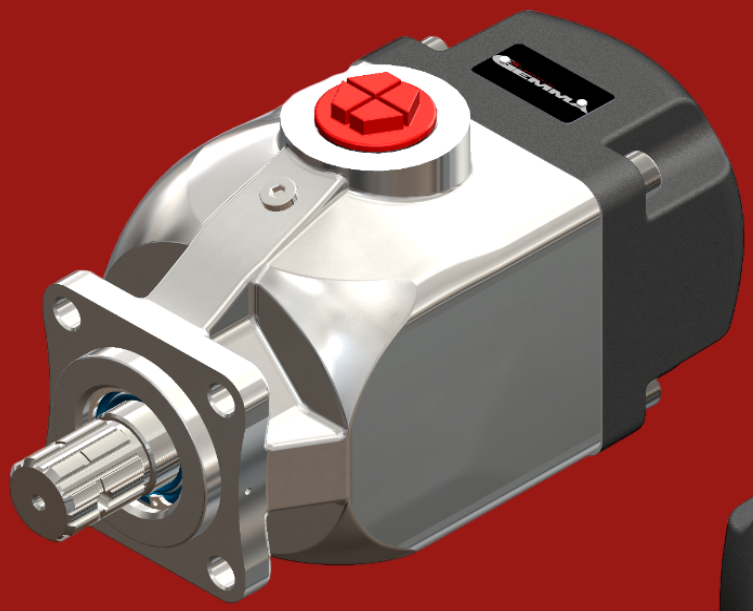

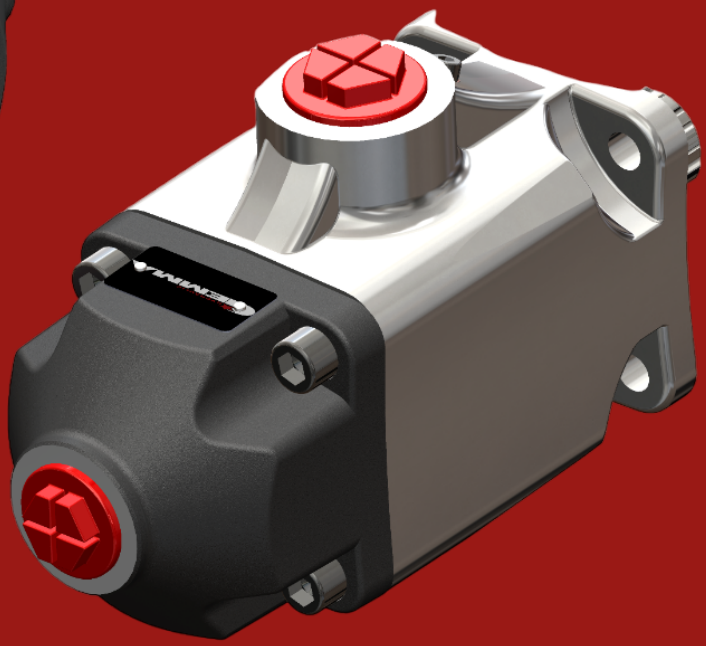

PDV Straight Piston Pump (High Pressure) 38 Lt.

Alüminyum Gövde Yüksek Basınç Piston Pompası 38 Lt.

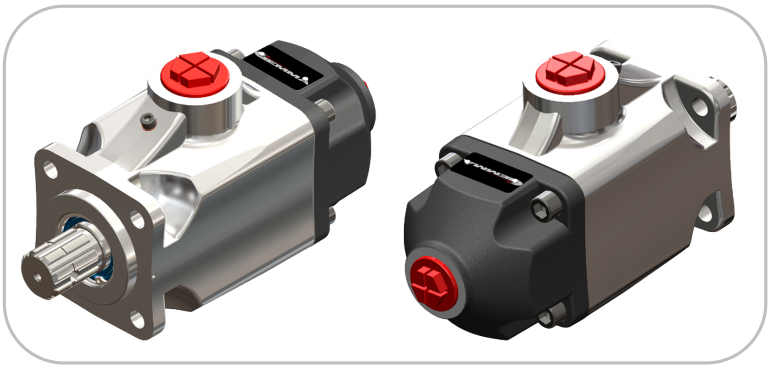

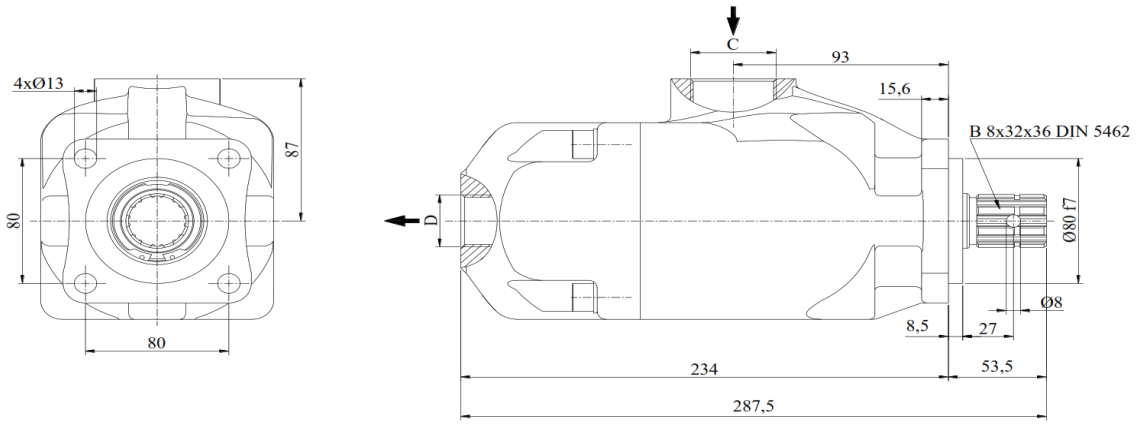

Specifications

Product Code	Displacement	Working Pressure	Max.intermittent pressure	Max.peak pressure	Max.continuous speed	Max.speed at intermit. pressure	Oil temperature range	Oil inlet diameter (C)	Oil Outlet diameter (D)	Weight
666038333	38 cc/rev.	350 bar	400 bar	430 bar	1500 1/min.	1800 1/min.	-20 & 80 °C	M45x2	R 1"	10 kg

Performance Graph

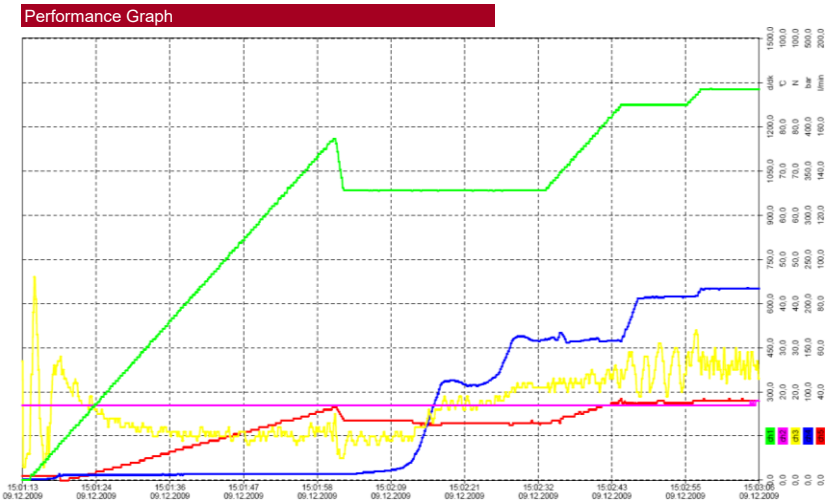

ChNo	Name1	Min	MinTime	Max	MaxTime	Unit
ch1	Devir	1,5	09.12.2009 15:01:13	329,0	09.12.2009 15:02:58	d/dk
ch2	Sicaklik	17,0	09.12.2009 15:01:13	18,0	09.12.2009 15:03:05	°C
ch3	Tork	3,0	09.12.2009 15:01:13	46,0	09.12.2009 15:01:15	N
ch4	Basinc	1,0	09.12.2009 15:01:13	218,0	09.12.2009 15:03:04	bar

ChNo	Name1	Min	MinTime	Max	MaxTime	Unit
ch5	Debi	0,0	09.12.2009 15:01:19	37,0	09.12.2009 15:02:45	l/min
ch6	-					
ch7	-					
ch8	-					

Pressure Definition

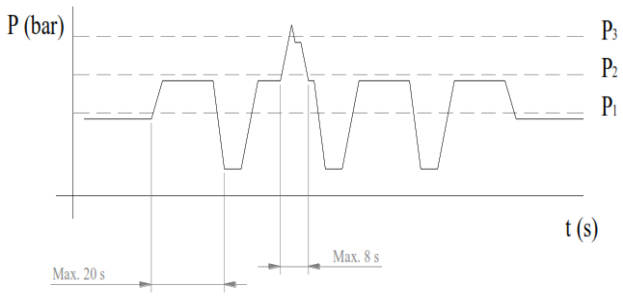

P_1 - Max. Sürekli basınç / Max. Continuous pressure
P_2 - Max. Kesintili basınç / Max. İntermittent pressure
P_3 - Max. Ani basınç / Max. Peak pressure

PDV Straight Piston Pump (High Pressure) 46 Lt.

Alüminyum Gövde Yüksek Basınç Piston Pompası 46 Lt.

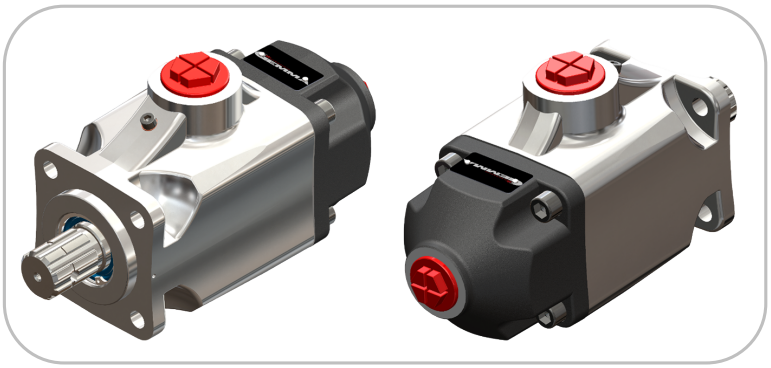

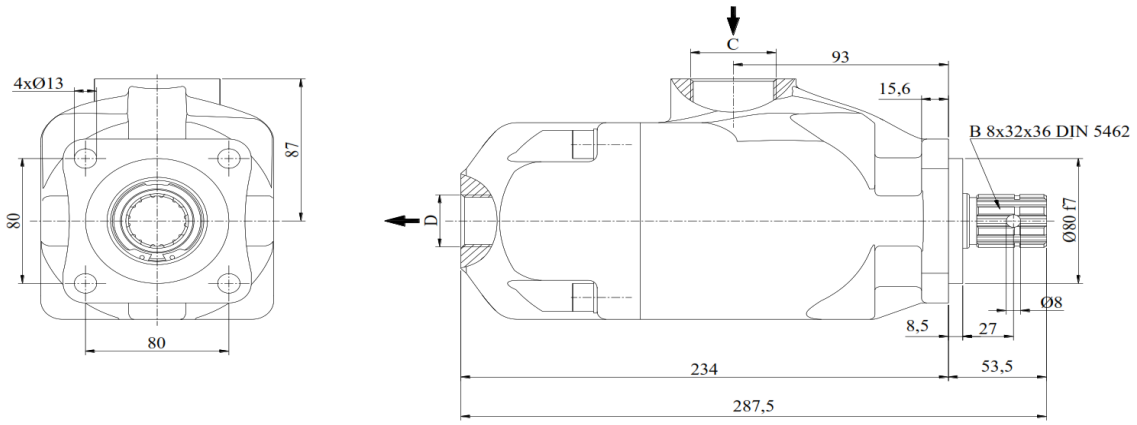

Specifications

Product Code	Displacement	Working Pressure	Max.intermittent pressure	Max.peak pressure	Max.continuous speed	Max.speed at intermit. pressure	Oil temperature range	Oil inlet diameter (C)	Oil Outlet diameter (D)	Weight
666046333	46 cc/rev.	350 bar	400 bar	430 bar	1500 1/min.	1800 1/min.	-20 & 80 °C	M45x2	R 1"	10 kg

Performance Graph

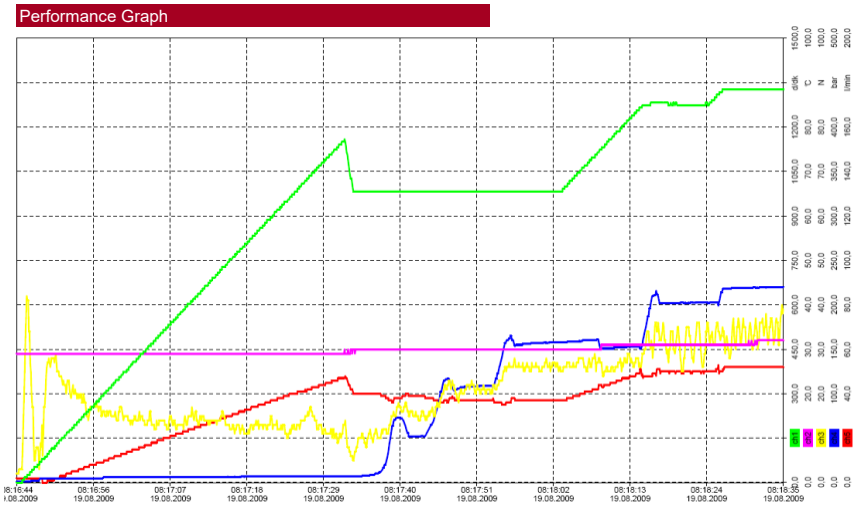

ChNo	Name1	Min	MinTime	Max	MaxTime	Unit
ch1	Devir	0,0	19.08.2009 08:16:44	327,5	19.08.2009 08:18:27	d/dk
ch2	Sicaklik	29,0	19.08.2009 08:16:44	32,0	19.08.2009 08:18:30	°C
ch3	Tork	2,0	19.08.2009 08:16:44	42,0	19.08.2009 08:16:46	N
ch4	Basinc	1,0	19.08.2009 08:16:44	220,0	19.08.2009 08:18:31	bar

ChNo	Name1	Min	MinTime	Max	MaxTime	Unit
ch5	Debi	0,0	19.08.2009 08:16:46	53,0	19.08.2009 08:18:26	l/min
ch6	-					
ch7	-					
ch8	-					

Pressure Definition

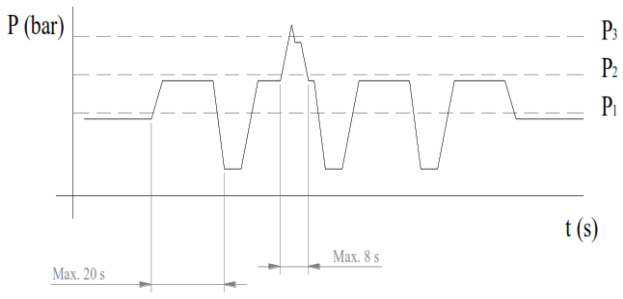

P_1 - Max. Sürekli basınç / Max. Continuous pressure
P_2 - Max. Kesintili basınç / Max. İntermittent pressure
P_3 - Max. Ani basınç / Max. Peak pressure

PDV Straight Piston Pump (High Pressure) 54 Lt.

Alüminyum Gövde Yüksek Basınç Piston Pompası 54 Lt.

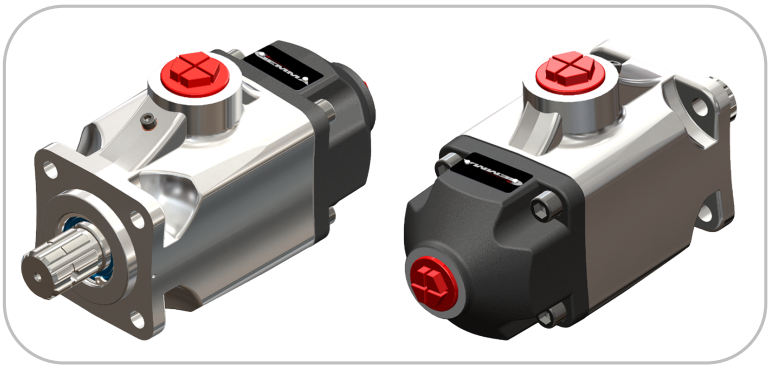

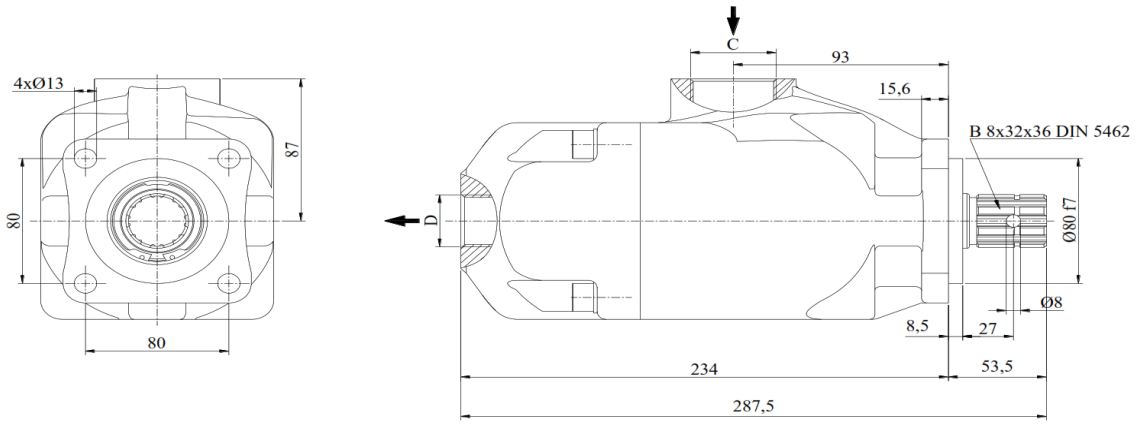

Specifications

Product Code	Displacement	Working Pressure	Max.intermittent pressure	Max.peak pressure	Max.continuous speed	Max.speed at intermit. pressure	Oil temperature range	Oil inlet diameter (C)	Oil Outlet diameter (D)	Weight
666054333	54 cc/rev.	350 bar	400 bar	430 bar	1500 1/min.	1800 1/min.	-20 & 80 °C	M45x2	R 1"	11 kg

Performance Graph

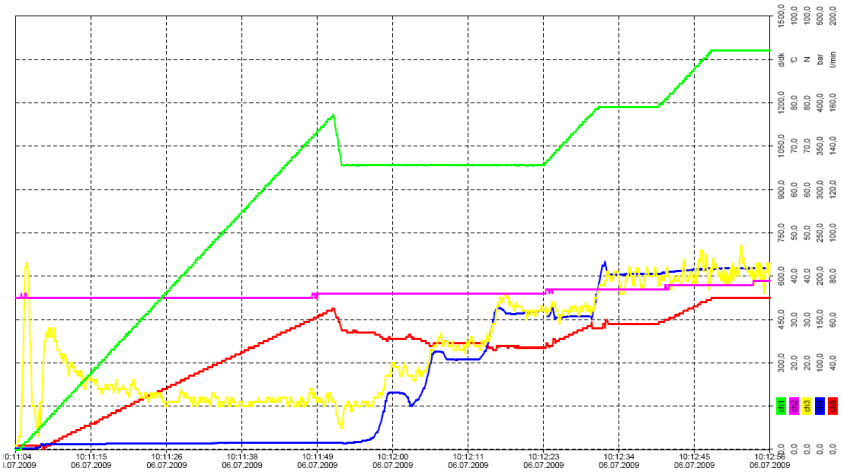

ChNo	Name1	Min	MinTime	Max	MaxTime	Unit
ch1	Devir	0,0	06.07.2009 10:11:04	381,5	06.07.2009 10:12:48	d/dk
ch2	Sicaklik	35,0	06.07.2009 10:11:04	39,0	06.07.2009 10:12:54	°C
ch3	Tork	1,0	06.07.2009 10:11:04	47,0	06.07.2009 10:12:52	N
ch4	Basinc	1,0	06.07.2009 10:11:04	217,0	06.07.2009 10:12:32	bar

ChNo	Name1	Min	MinTime	Max	MaxTime	Unit
ch5	Debi	0,0	06.07.2009 10:11:08	70,0	06.07.2009 10:12:48	l/min
ch6	-					
ch7	-					
ch8	-					

Pressure Definition

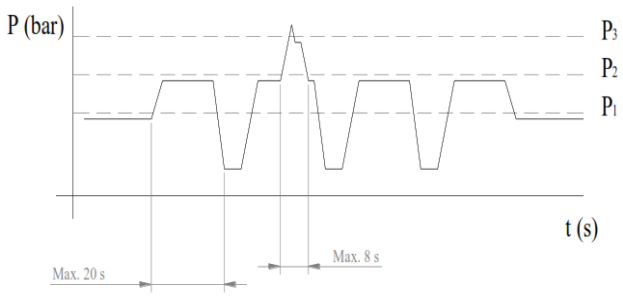

P_1 - Max. Sürekli basınç / Max. Continuous pressure
P_2 - Max. Kesintili basınç / Max. İntermittent pressure
P_3 - Max. Ani basınç / Max. Peak pressure

PDV Straight Piston Pump (High Pressure) 60 Lt.

Alüminyum Gövde Yüksek Basınç Piston Pompası 60 Lt.

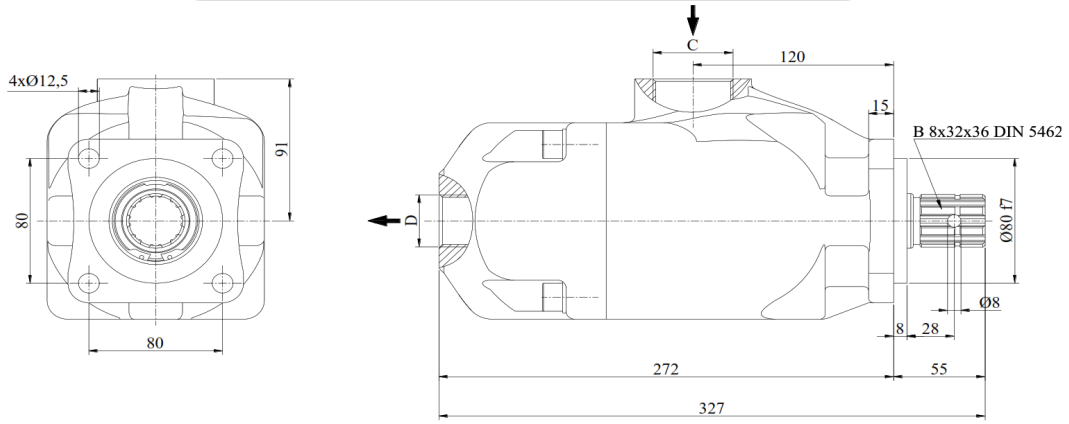

Specifications

Product Code	Displacement	Working Pressure	Max.intermittent pressure	Max.peak pressure	Max.continuous speed	Max.speed at intermit. pressure	Oil temperature range	Oil inlet diameter (C)	Oil Outlet diameter (D)	Weight
666060333	65 cc/rev.	350 bar	400 bar	430 bar	1500 1/min.	1800 1/min.	-20 & 80 °C	R 1 1/2"	R 1"	19 kg

Performance Graph

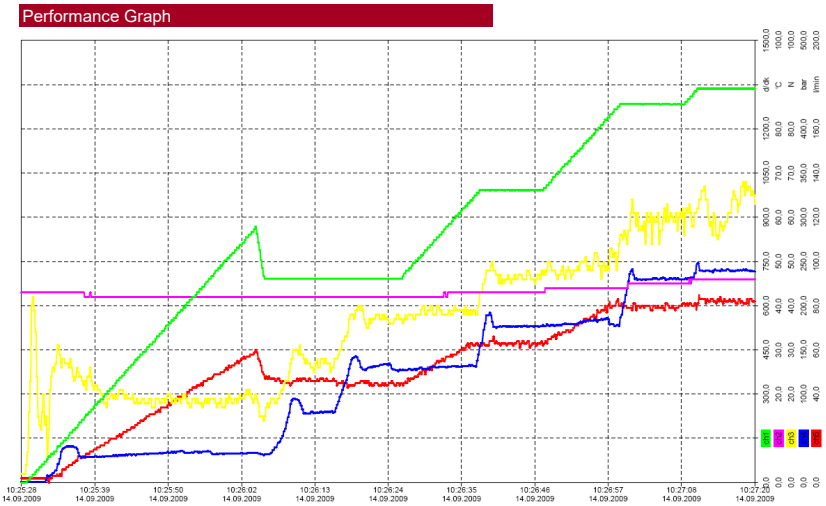

ChNo	Name1	Min	MinTime	Max	MaxTime	Unit
ch1	Devir	0,0	14.09.2009 10:25:28	336,5	14.09.2009 10:27:11	d/dk
ch2	Sicaklik	42,0	14.09.2009 10:25:38	46,0	14.09.2009 10:27:10	°C
ch3	Tork	2,0	14.09.2009 10:25:28	68,0	14.09.2009 10:27:18	N
ch4	Basinc	1,0	14.09.2009 10:25:28	248,0	14.09.2009 10:27:11	bar

ChNo	Name1	Min	MinTime	Max	MaxTime	Unit
ch5	Debi	0,0	14.09.2009 10:25:32	85,0	14.09.2009 10:27:11	l/min
ch6	-					
ch7	-					
ch8	-					

Pressure Definition

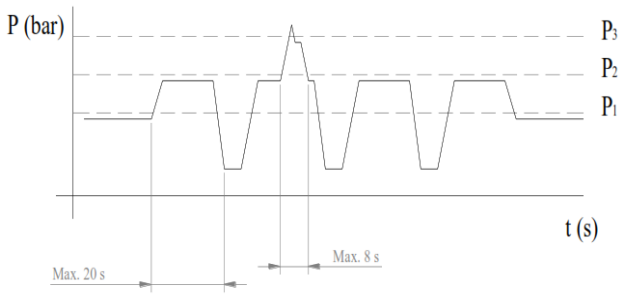

P_1 - Max. Sürekli basınç / Max. Continuous pressure
P_2 - Max. Kesintili basınç / Max. İntermittent pressure
P_3 - Max. Ani basınç / Max. Peak pressure

PDV Straight Piston Pump (High Pressure) 65 Lt.

Alüminyum Gövde Yüksek Basınç Piston Pompası 65 Lt.

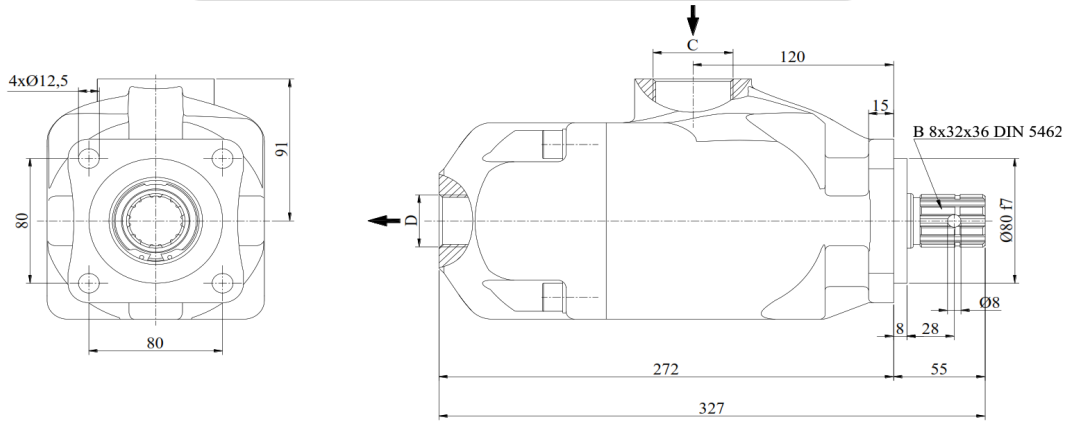

Specifications

Product Code	Displacement	Working Pressure	Max.intermittent pressure	Max.peak pressure	Max.continuous speed	Max.speed at intermit. pressure	Oil temperature range	Oil inlet diameter (C)	Oil Outlet diameter (D)	Weight
666065333	65 cc/rev.	350 bar	400 bar	430 bar	1500 1/min.	1800 1/min.	-20 & 80 °C	R 1 1/2"	R 1"	19 kg

Performance Graph

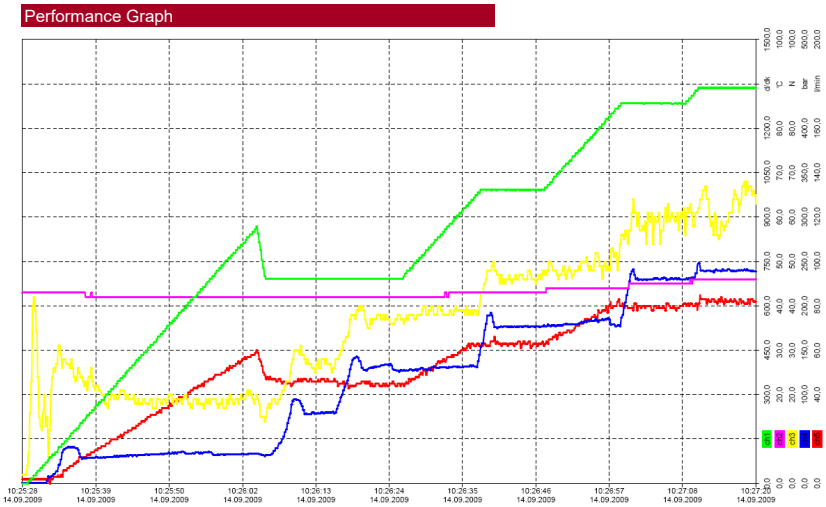

ChNo	Name1	Min	MinTime	Max	MaxTime	Unit
ch1	Devir	0,0	14.09.2009 10:25:28	336,5	14.09.2009 10:27:11	d/dk
ch2	Sicaklik	42,0	14.09.2009 10:25:38	46,0	14.09.2009 10:27:10	°C
ch3	Tork	2,0	14.09.2009 10:25:28	68,0	14.09.2009 10:27:18	N
ch4	Basinc	1,0	14.09.2009 10:25:28	248,0	14.09.2009 10:27:11	bar

ChNo	Name1	Min	MinTime	Max	MaxTime	Unit
ch5	Debi	0,0	14.09.2009 10:25:32	85,0	14.09.2009 10:27:11	l/min
ch6	-					
ch7	-					
ch8	-					

Pressure Definition

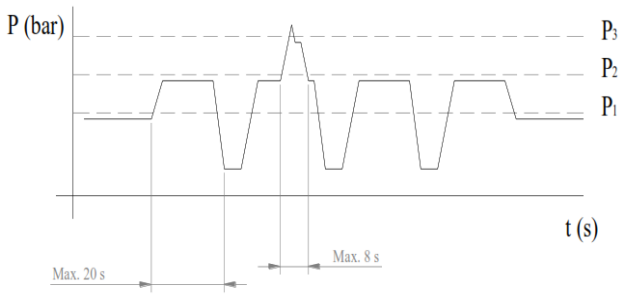

P_1 - Max. Sürekli basınç / Max. Continuous pressure
P_2 - Max. Kesintili basınç / Max. İntermittent pressure
P_3 - Max. Ani basınç / Max. Peak pressure

PDV Straight Piston Pump (High Pressure) 80 Lt.

Alüminyum Gövde Yüksek Basınç Piston Pompası 80 Lt.

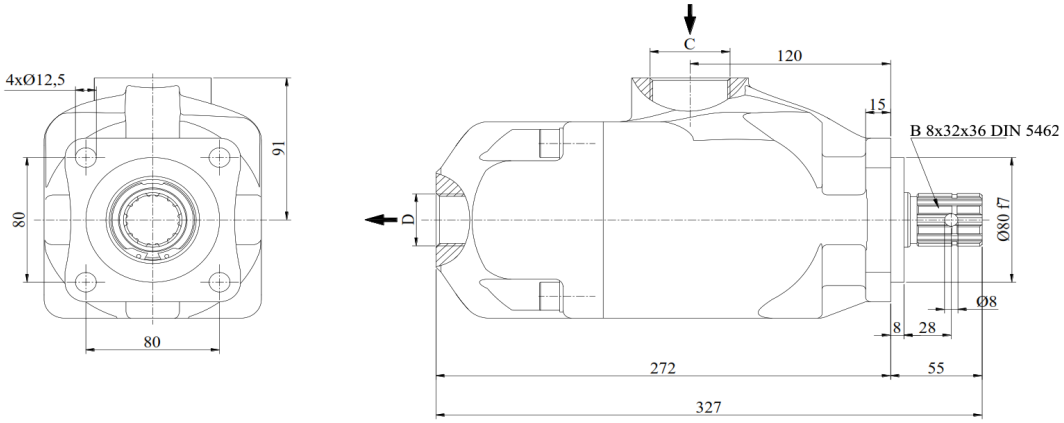

Specifications

Product Code	Displacement	Working Pressure	Max.intermittent pressure	Max.peak pressure	Max.continuous speed	Max.speed at intermit. pressure	Oil temperature range	Oil inlet diameter (C)	Oil Outlet diameter (D)	Weight
666080333	81 cc/rev.	350 bar	400 bar	430 bar	1500 1/min.	1800 1/min.	-20 & 80 °C	R 1 1/2"	R 1"	16 kg

Performance Graph

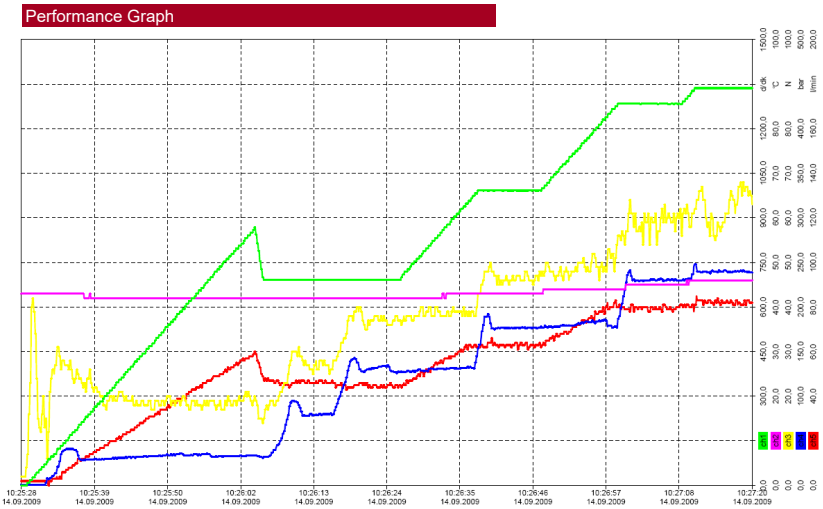

ChNo	Name1	Min	MinTime	Max	MaxTime	Unit
ch1	Devir	0,0	14.09.2009 10:25:28	1336,5	14.09.2009 10:27:11	d/dk
ch2	Sicaklik	42,0	14.09.2009 10:25:38	46,0	14.09.2009 10:27:10	°C
ch3	Tork	2,0	14.09.2009 10:25:28	68,0	14.09.2009 10:27:16	N
ch4	Basinc	1,0	14.09.2009 10:25:28	248,0	14.09.2009 10:27:11	bar

ChNo	Name1	Min	MinTime	Max	MaxTime	Unit
ch5	Debi	0,0	14.09.2009 10:25:32	85,0	14.09.2009 10:27:11	l/min
ch6	-					
ch7	-					
ch8	-					

Pressure Definition

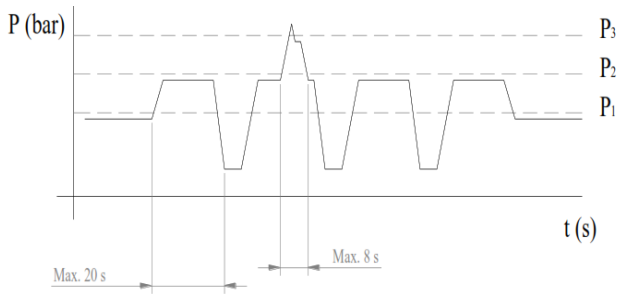

P_1 - Max. Sürekli basınç / Max. Continuous pressure
P_2 - Max. Kesintili basınç / Max. İntermittent pressure
P_3 - Max. Ani basınç / Max. Peak pressure

PDV Straight Piston Pump (High Pressure) 90 Lt.

Alüminyum Gövde Yüksek Basınç Piston Pompası 90 Lt.

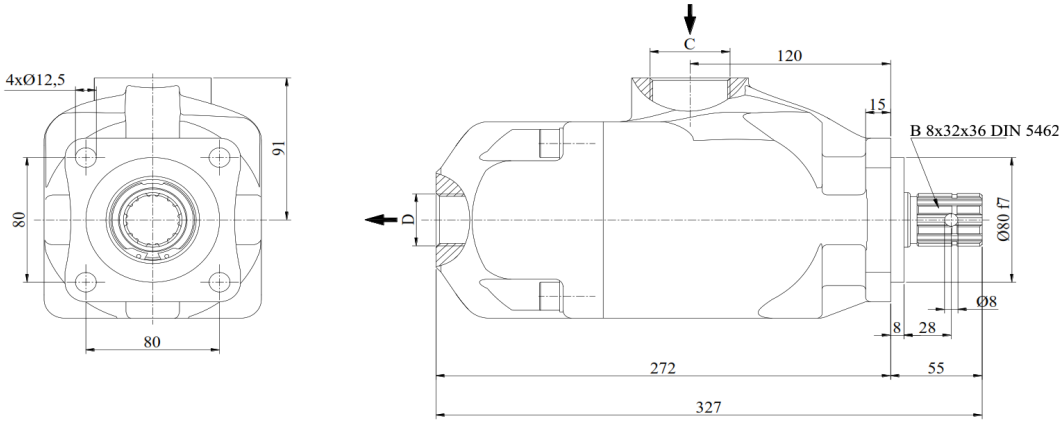

Specifications

Product Code	Displacement	Working Pressure	Max.intermittent pressure	Max.peak pressure	Max.continuous speed	Max.speed at intermit. pressure	Oil temperature range	Oil inlet diameter (C)	Oil Outlet diameter (D)	Weight
666090333	91 cc/rev.	350 bar	400 bar	430 bar	1500 1/min.	1800 1/min.	-20 & 80 °C	R 1 1/2"	R 1"	17 kg

Performance Graph

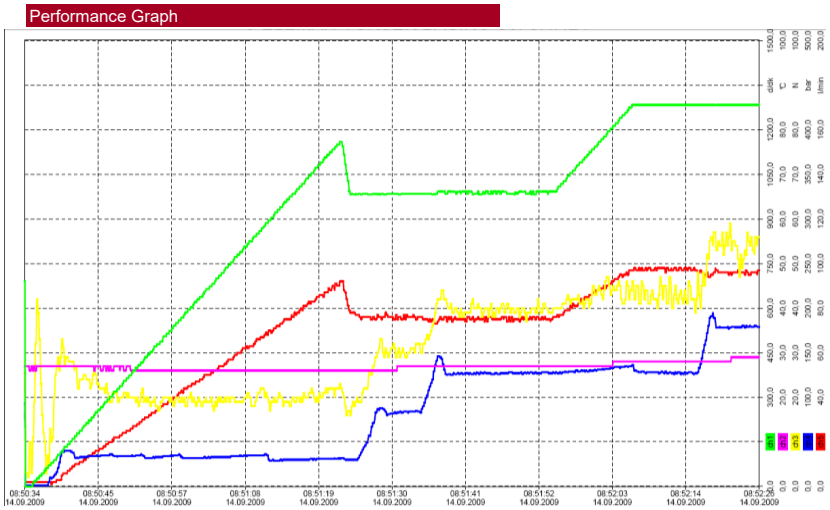

ChNo	Name1	Min	MinTime	Max	MaxTime	Unit
ch1	Devir	0,0	14.09.2009 08:50:34	284,0	14.09.2009 08:52:06	d/dk
ch2	Sicaklik	26,0	14.09.2009 08:50:35	29,0	14.09.2009 08:52:21	°C
ch3	Tork	2,0	14.09.2009 08:50:35	59,0	14.09.2009 08:52:21	N
ch5	Basinc	1,0	14.09.2009 08:50:34	195,0	14.09.2009 08:52:19	bar

ChNo	Name1	Min	MinTime	Max	MaxTime	Unit
ch4	Debi	1,0	14.09.2009 08:50:38	98,0	14.09.2009 08:52:07	l/min
ch6	-					
ch7	-					
ch8	-					

Pressure Definition

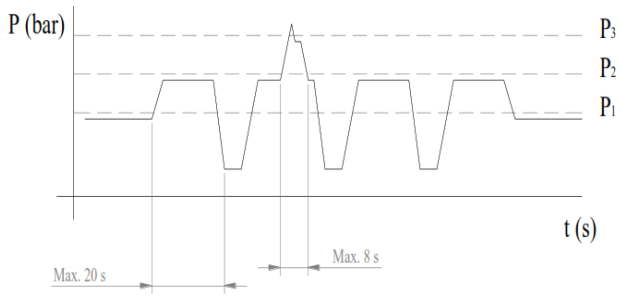

P_1 - Max. Sürekli basınç / Max. Continuous pressure
P_2 - Max. Kesintili basınç / Max. İntermittent pressure
P_3 - Max. Ani basınç / Max. Peak pressure

PDV Straight Piston Pump (High Pressure) 102 Lt.

Alüminyum Gövde Yüksek Basınç Piston Pompası 102 Lt.

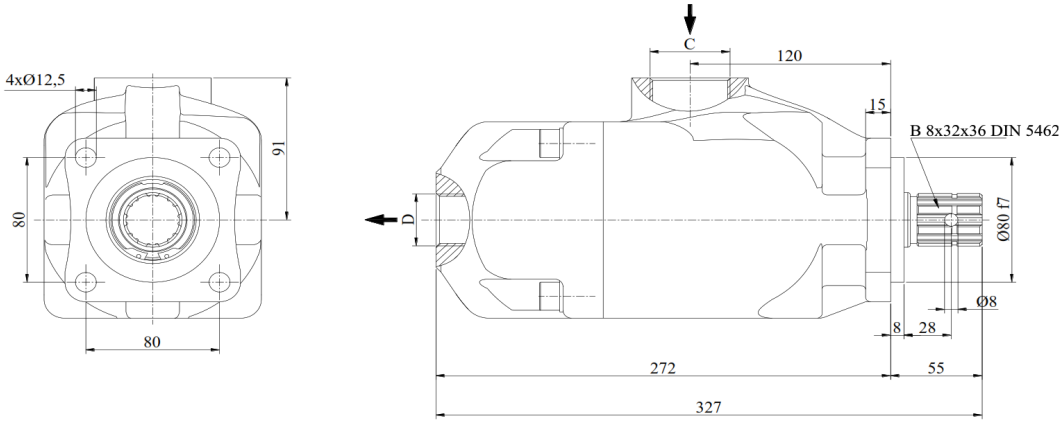

Specifications

Product Code	Displacement	Working Pressure	Max.intermittent pressure	Max.peak pressure	Max.continuous speed	Max.speed at intermit. pressure	Oil temperature range	Oil inlet diameter (C)	Oil Outlet diameter (D)	Weight
666102333	101 cc/rev.	350 bar	400 bar	430 bar	1500 1/min.	1800 1/min.	-20 & 80 °C	R 1 1/2"	R 1"	18 kg

Performance Graph

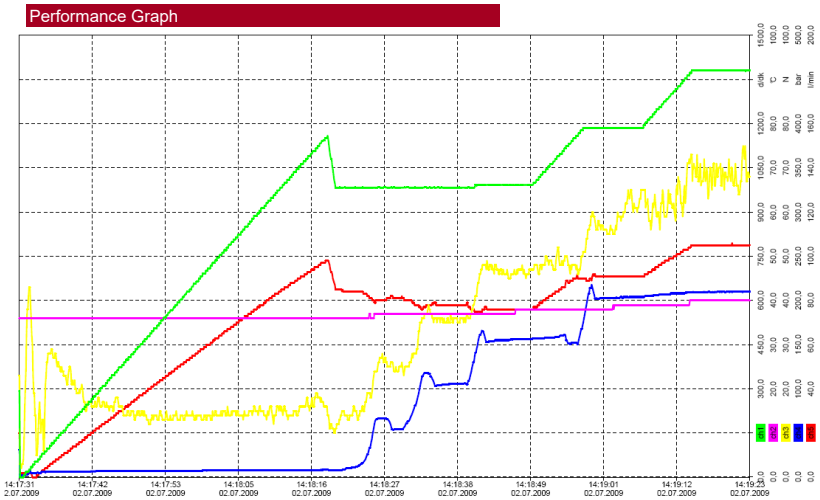

ChNo	Name1	Min	MinTime	Max	MaxTime	Unit
ch1	Devir	0,0	02.07.2009 14:17:31	1381,5	02.07.2009 14:19:14	d/dk
ch2	Sicaklik	36,0	02.07.2009 14:17:31	40,0	02.07.2009 14:19:14	°C
ch3	Tork	2,0	02.07.2009 14:17:31	75,0	02.07.2009 14:19:22	N
ch4	Basinc	2,0	02.07.2009 14:17:31	218,0	02.07.2009 14:18:59	bar

ChNo	Name1	Min	MinTime	Max	MaxTime	Unit
ch5	Debi	0,0	02.07.2009 14:17:33	106,0	02.07.2009 14:19:20	l/min
ch6	-					
ch7	-					
ch8	-					

Pressure Definition

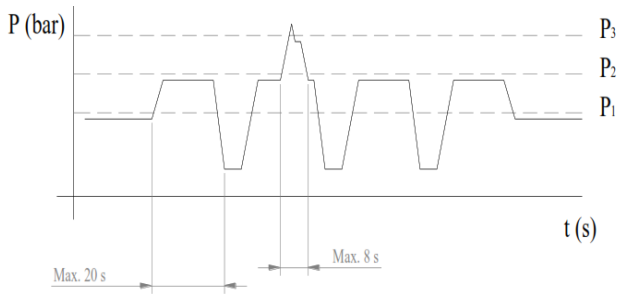

P_1 - Max. Sürekli basınç / Max. Continuous pressure
P_2 - Max. Kesintili basınç / Max. İntermittent pressure
P_3 - Max. Ani basınç / Max. Peak pressure

PRODUCT CATALOGUE ÜRÜN KATALOĞU

BİZE ULAŞ

CONTACT US

+90 (332) 236 01 80

+90 (332) 236 01 83

www.gemmahydraulic.com

Büyükkayacık OSB. Mah. 4.Organize Sanayi 413. Sk. No:9

Selçuklu / KONYA

GEMMA HYDRAULIC